The Recording and Reproduction of Sound

Read, Oliver

The Recording and Reproduction of Sound

•

A Complete Reference Manual on Audio for the Professional and the Amateur

•

REVISED AND ENLARGED
SECOND EDITION · FEBRUARY 1952
SECOND PRINTING · MARCH 1953

The Recording and Reproduction of Sound

•

OLIVER READ, D.Sc., D.Litt.
Editor, Radio and Television News
and
Radio-Electronic Engineering

•

HOWARD W. SAMS & CO., INC.
INDIANAPOLIS 5, INDIANA
1952

To Gladys

PUBLISHER'S NOTE

The demand for, and the acceptance accorded, the first edition of this work has provided the stimulus for the present greatly expanded and revised volume. With more than twice the number of pages, this second edition includes many new and timely chapters, so that the work is in every sense a complete reference to all phases of audio. The text is written at a practical level, yet includes essential technical data in mathematical form to cover the subjects adequately. Prepublication of this new volume has been undertaken as a continued service toward the advancement of knowledge in the audio field both as it applies to commercial application and to use in the home. The text and opinions expressed are those of the author.

HOWARD W. SAMS & CO., Inc.

Printed in the USA

ABOUT THE AUTHOR

The publication of the second edition of *The Recording and Reproduction of Sound* compiles in a single volume the detailed results of many years of exhaustive research and experimentation by the author, Dr. Oliver Read. The immediate acceptance of the first edition encouraged further writing on many new chapters as well as expansion of much of the earlier material. As Editor of RADIO & TELEVISION NEWS and RADIO-ELECTRONIC ENGINEERING, Dr. Read has long been a direct observer of the audio industry, both in the role of a hobbyist as well as professionally.

Author of many articles on recording and reproduction, notably *"The Theory and Practice of Disc Recording," "Building Your Own Recording Studios"* and *"A Flexible Record-Reproduce System,"* Dr. Read possesses an enthusiasm and interest in the subject which he reflects in the practical treatment he accords Audio in all of its numerous phases. To keep abreast of the field, he maintains a fully equipped laboratory in his home for experimental work on tape, disc and wire recording and reproduction and for the study of home music systems. He witnessed the Atom Bomb tests at Bikini and recorded the events on wire.

Dr. Read is a member of the IRE Professional Group on Audio, The Society of Motion Picture and Television Engineers, Acoustical Society of America, Audio Engineering Society, Chicago Acoustical and Audio Group, British Sound Recording Association, American Institute of Physics and the Armed Forces Communications Association.

He maintains a broad and active interest in all developments in the audio, radio, television and electronic fields, each of which has made its own contribution to the advancement of the art of recording and reproducing Sound.

Preface

A complete reference to the many subjects in the general category of sound recording and reproduction has long been wanting. The need for ready reference on audio in all of its many phases has been repeatedly expressed by the audio engineer, the audiophile, sound technician, student, recordist, PA service technician and others engaged in the recording or reproduction of sound by means of disc, tape, wire or film.

Numerous articles have appeared in technical and non-technical journals covering various aspects of sound and their relation to recording techniques and methods of reproduction. Scattered as these articles are, it becomes a problem of continuous research and reference to hunt through such material, both foreign and domestic, to locate information on specific subjects in so wide a field.

Accordingly, THE RECORDING AND REPRODUCTION OF SOUND has been written to cover, in a single volume, all the essential requirements for a complete understanding of all currently employed systems and to include specific data on the components that determine the final result.

In the design of apparatus for the recording or reproduction of sound, the ultimate destination of the transmitted energy impulses is the human ear. The sequence of events (including acoustics) occurring from the time sound leaves its source until it arrives at the human ear, is a fascinating subject, rich with interesting phenomena. Acoustics has its inductance, capacitance, resistance; in fact, practically all the elements found in electrical circuits. It is our purpose to discuss acoustics insofar as it applies to the explanation or use of specific apparatus.

The recording and reproduction of sound is a complex subject embracing many methods and techniques. New developments are increasing practical applications for sound reinforcement, and magnetic recording units have proved their capabilities for use in the studio, in the home and in commerce. Microgroove records are contributing better music at lower cost to the masses. Magnetic pickups of the variable reluctance type have proved their worth and new reproducers offer true fidelity reproduction.

The text of this volume includes an abundance of information for those primarily interested in getting the finest possible reproduction from all forms of recorded media. Complete systems are included and a wide choice of amplifiers is presented so that the reader may make his own selection to suit his own particular requirements. The book emphasizes subjects known to be of greatest interest to those engaged in the recording or reproduction of sound. It has been written at semi-technical or non-technical level, wherever possible, and a practical viewpoint has been taken in presenting the material. Finally, the book contains essential history which serves as a background for a complete understanding of the many methods and techniques employed in recording and reproducing sound.

The author wishes to express his appreciation to the following for their help in supplying photographs and other material used in this book:

Aerovox Corporation
American Standards Association
Armour Research Foundation
Berlant Associates
Brush Development Company
Columbia
Eicor, Inc.
Electro-Voice
Fairchild
Fidelitone, Incorporated
General Electric Company
Indiana Steel Products Co.
Magnecord
Minnesota Electronics Corp.
Minnesota Mining & Mfg. Corp.
National Association of Broadcasters

Radio Corporation of America
Radio & Television News
Radio & Television News, Radio-Electronic Engineering Edition
The Radio-Television Manufacturers Association
Society of Motion Picture and Television Engineers
Shure Bros.
Standard Transformer Corporation
Sylvania Electric Products Co., Inc.
United Transformer Co.
Western Electric Company, Inc.
Westrex Corporation

And to Harold Renne, E. Hitzel and J. Juster for their help in the preparation of the manuscript.

Table of Contents

CHAPTER 24

CHAPTER 25

CHAPTER 26

CHAPTER 27

CHAPTER 28

CHAPTER 29

CHAPTER I

Behavior of Sound Waves

The behavior of sound waves—introduction to the history, development, and applications for the recording and reproduction of sound. Mechanical, electrical, and electronic methods will be covered, including sound on wire, disc, tape, film, etc.

● To fully understand the many problems which enter into the recording and reproduction of sound, we must first take into consideration the basic concept of sound. We must understand and fully appreciate the characteristics of sound or we cannot apply satisfactory techniques to obtain a true facsimile of the original sounds we expect to reproduce.

Webster defines *sound* as follows: "Sensation due to stimulation of the auditory nerves and auditory centers of the brain, usually by vibrations transmitted in a material medium (commonly air) affecting the organ of hearing-vibration energy which occasions such a sensation. Sound is propagated by progressive longitudinal vibratory disturbances (sound waves)."

Thus, it becomes apparent that the source of sound lies in the realm of physics, while the effect of sound is a physiological consideration. The engineering of sound consists of controlling the cause so as to produce the desired effect.

The theory of *sound waves* may be explained in simplified form thusly: If a small stone is dropped into a pool of still water, waves will be set up which will travel in all directions away from the point of impact. If our original stone were small in physical size, only waves small in height would result. However, if a large stone were dropped into the still water, we would discover that we have generated waves having a greater height. The up and down movement of the waves represents the *amplitude* or the intensity of the waves.

Differing from the behavior of water waves, sound particles of air do not move up and down and across in the pattern in which waves move but all move in the same direction. These particles of disturbed air literally bump one another as they travel through space. The air, therefore, is alternately compressed and rarefied.

The number of waves passing any fixed point per second represents the *frequency* or number of waves per second. Therefore, the *frequency* depends upon the number of waves traveling past one spot during an interval of one second. If we tie a string to a stone which is immersed in still water and move it up and down at the rate of 100 times per second, we will send out waves from the point of impact at the rate of 100 per second. In the study of acoustics we refer to *frequency* in terms of cycles per second, abbreviated cps.

Now suppose we took a large stone and moved it up and down very slowly

in and out of the water, we would then set up waves at a lower frequency, but due to the greater displacement of the water by the object, we would create waves of greater amplitude.

The top of the wave is referred to as the *crest,* while the bottom is known as the *trough.* One *cycle,* as far as one wave is concerned, would be one complete wave beginning from its normal still point, building up to a crest, passing again through its still point, down to the lowest point, the trough, and its return to its normal position. See Fig. 1-1D.

Sound waves are not limited to but one frequency. In fact the speaking voice is made up of a variety of *complex waves.* These are continually varying in both frequency and amplitude. In other words, if we raise our voices in *pitch,* we are actually increasing the *frequency* and the *louder* we talk, the greater will be the *amplitude* of the sound waves sent out by our speaking mechanism.

All sound waves are composed of frequency, intensity, periodicity, and waveform.

1. *Frequency* is the speed of vibration or number of complete cycles per second. Frequency also determines pitch. If we double the speed of vibration, we raise the pitch one octave. For example, a note having 1000 vibrations (cycles per second) would be raised by one octave if the frequency were doubled to 2000 cps.

2. *Intensity* is the amplitude or power of vibration. Intensity therefore determines the loudness of a sound. If the pressure of a sound wave is doubled in intensity, we increase the power by about 3 decibels. The *decibel* is a ratio of power, voltage or current and not a quantity.

In the behavior of sound waves various ranges of intensities and pressures are so great that it is necessary to have some means which will conveniently measure volume or amplitude. The *decibel* is a unit used for expressing the magnitude of a change in either a sound level or a signal level. One decibel is the amount that the pressure of a pure sine wave tone must be changed in order for the change to be just barely detectable by the average human ear. The amount of change in power level expressed in decibels is equal to ten times the common logarithm of the ratio of the two powers.

$$\text{db.} = 10 \log_{10} P_1/P_2$$

3. *Periodicity* is the lack of, or the existence of, rhythm in sound. Therefore, musical sounds are *periodic,* while street noises, the jingle of keys on a chain, etc. are *non-periodic.*

4. *Waveform* is a direct pattern of vibration. Most fundamental sound waves are modified by secondary vibrations. The *timbre* of sound is determined by the waveform. Thus it is possible to distinguish particular notes played on various musical instruments such as the violin and the flute.

Distortion

If a microphone, radio tuner, pickup, amplifier or speaker is incapable of reproducing a true picture of the original sound waves, *distortion* will occur. This distortion may come from either mechanical or electrical defects in the system. *Mechanical distortion* may be caused from such conditions as having a needle in a phonograph pickup move because it has not been tightened thoroughly by means of the needle set screw. In other words, vibrations set up within the pickup could not transmit or move the needle in perfect cadence with the original electrical vibrations. The needle would be permitted to move freely and to follow random vibrations of its own choice instead of moving in perfect unison with the armature in the pickup.

Many reproducer (loudspeaker) cones vibrate at some particular frequency not found in the music that is fed to the speaker for reproduction. The resulting buzzing effect would be a form of *mechanical distortion.* The above illustrations are typical but many others may be encountered throughout the equipment if care is not exercised to

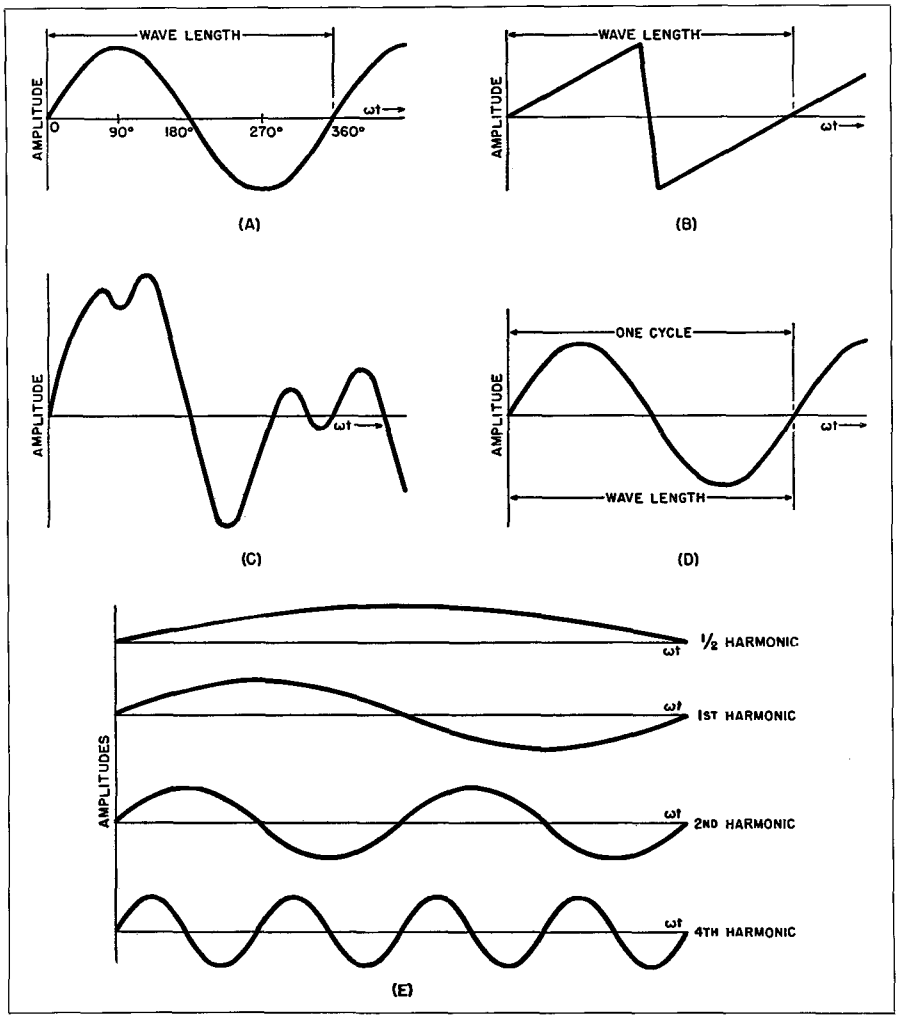

Fig. 1-1. Illustrating the characteristic behavior of wave motion; (A) sine, (B) periodic, (C) random, (D) one cycle and (E) harmonics.

adjust each and every part which might cause mechanical distortion.

Generally speaking, a sound is said to be distorted when the waveform is altered in transmission or when the intensity of any frequency is suppressed or exaggerated out of its natural proportions.

Electrical distortion is caused by the inability of the microphone, amplifier or speaker to give a true reproduction (facsimile) of frequency. For example; the delicate diaphragm on a microphone may become warped from excessive heat, etc. As pressure from the sound waves strikes this distorted diaphragm, the resulting currents would become distorted. There are many forms of electrical distortion. A poorly designed amplifier, overloaded audio stages, impedance mismatching and improper biasing will all result in electrical distortion.

The Ear

There are three main divisions to the human ear: (a) The outer ear, which is made up of the visible portion of the ear and the canal which is not visible. (b) The middle ear, which is the receiver for sound approaching the eardrum and the conducting media for sounds through a chain of three small bones (the ossicles), to the inner ear. (c) The inner ear is the delicate container filled with fluid in which is immersed the nerve ends which perceive sound and which also transmit messages to the brain. The part of the inner ear that perceives sound is called the cochlea. There is still another part of the inner ear in the form of semicircular canals which give us our sense of balance.

In the transmission and reproduction of sound, consideration must be given to the human ear as a transducer (here the sound waves are transformed into a stimulus for the auditory system). The ear exhibits certain non-linear characteristics which affect the fidelity with which sounds are received. For instance, harmonics of a fundamental tone are generated at different intensity levels. This may be compared in a sense to higher resonant modes of vibrating mechanical systems and their general effect is to reduce fidelity of the original tone.

There is a definite phase effect existing between the sound wave and generated harmonics in the ear and the effect contributes to the distortion experienced in hearing. As may be expected, there are definite intensity limits between which speech and music are reproduced with perfect fidelity.

There are many factors affecting the quality of a tone. Among these are the harmonic content, pitch, and intensity. The *quality* of a tone is also called *timbre* and should be distinguished from *fidelity*. Timbre is a relative quality of sound while fidelity is a true measure of the accuracy with which a sound is reproduced. While much has been done in measuring timbre, the results are subjective. "Full," "Rich," "brassy," "metallic" are some of the terms used in describing the timbre of a sound.

Speech has a frequency range of from approximately 100 to 8000 cps.

Sounds having very low frequencies possess the most power and result in naturalness and apparent loudness. High frequency sounds provide intelligibility. If we eliminate all sounds below 1000 cps we take but little from the clarity of the sound, but we do notice that the sound appears to be unnatural. However, if we eliminate sounds above 1000 cycles, we find that the speech is unintelligible but, as far as volume is concerned, there is little, if any, apparent change.

Speech may be considered as a series of *periodic* sound waves, emitted in a certain sequence. Association of particular sound sequences with particular ideas is the distinguishing feature between speech and noise. The so-called "scrambled" speech systems serve as an excellent illustration of this point. In such a system, spoken sounds are distorted by specially designed circuits and then transmitted in the distorted form. The receiver must have a rectifying circuit to convert the wave impulses back to their original undistorted form rendering it intelligible to the human ear.

Music

That sound we choose to call *music* consists of a sequence of single tones or a sequence of several tones played in unison. Pure single tones are harmonic in waveform and the key or pitch is

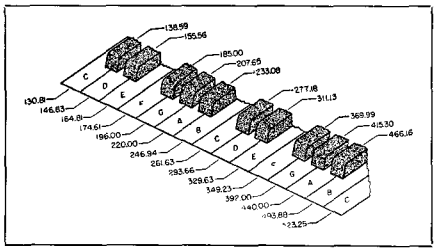

Fig. 1-2. Diagram illustrates keys of a piano keyboard and shows tempered scale for one octave on each side of middle C.

determined by the frequency (with certain modifications to be discussed later). The scale is an ascending series of tones with definite frequency intervals. Fig. 1-2 shows a portion of a standard piano keyboard for one octave on each side of middle C. The frequencies noted represent a so-called tempered scale which divides an octave into twelve equal intervals. The relative frequencies of the tempered scale (omitting sharps and flats) are shown below for one octave:

Key	*Relative Frequency*
C	1.000
D	1.122
E	1.260
F	1.325
G	1.498
A	1.682
B	1.887
C	2.000

The combinations of two or more tones make up a periodic composite sound. Here again the psychological phase of music shows up, for if the new sound is pleasing to the ear, it is called harmonious. If, on the other hand, the sound is irritating, the combination of tones is said to be in discord.

Frequency Range

If a tone is maintained at a constant intensity but its frequency is raised and lowered, high and low frequency points will be reached beyond which there will be no sensory perception by the ear. Generally this *frequency range* extends from 30 to 16,000 cps. The frequency range for conversational speech is from about 100 to 8000 cps, as mentioned previously. In terms of power, conversational speech will vary over about 50 db. and the intensity of the loudest sound will be about 100,000 times that of the weakest.

A large symphony orchestra, with instruments producing an abundance of bass notes and overtones extends over practically the entire frequency range of the ear—30 to 16,000 cps. The over-all volume range of a symphony orchestra from the softest passages through the loudest passages and peaks runs about 70 db. or an intensity range of 10,000,000 times.

Reproducing systems for highest fidelity should have a frequency range that is uniform from about 30 to 16,000 cps and a volume range of 70 db.

Of equal importance, the original sounds must be reproduced at the same power levels as were present in the studio. This is important if proper *balance* between the lower and higher frequencies is to be maintained.

When a sound is reproduced at a higher level than that of the original, the low bass frequencies will appear to be *accentuated.* If the sound is reproduced at a lower level than the original, bass frequencies will appear to be *attenuated* (suppressed) with respect to other portions of the frequency spectrum.

Noise

Noise is usually considered to be *random* sound waves with little or no periodicity. That does not completely define noise for certain "noises" are associated with certain commonplace events; for instance, the creaking of doors or gates, the clicking sound made by walking on a hard surface with leather heels, etc. The hum of an electric motor is considered noise, yet an analysis of the sound by means of an oscillogram would indicate a definite periodicity. Again it seems that the distinction between the classification of sounds is psychological in origin and relative to the observer.

The Technical Aspects of Sound

Sound is usually characterized as wave motion of which there may be three forms, namely, harmonic, periodic, and random.

Waves are propagated disturbances and may be *transverse* or *longitudinal,* depending upon the direction of the disturbance.

In a *transverse* wave, the particles of the medium vibrate in a direction

perpendicular to the direction of propagation. For example, in a water wave, the individual particles of water move up and down, while the direction of wave motion is along the surface, or perpendicular to the particle motion. Thus, a water wave is a transverse wave.

A *longitudinal* wave is so named because the particles of the medium vibrate in a direction parallel to the direction of propagation. In a sound wave, for example, the individual particles of air move back and forth in the same direction that the wave is traveling. Thus, a sound wave is a longitudinal wave.

A *wavefront* may be classified as *plane* or *spherical.* Since a wave in general spreads out uniformly in all directions from its source or origin, the wavefront will be spherical close to the source. However, at some distance from the source the curvature is practically zero, and the wave is considered to be a plane wave. If a pebble is dropped in a still pond, circular waves will spread out in all directions, but by the time they have traveled a considerable distance, the waves will be essentially straight. Thus, a wave which starts out spherical (or circular in two dimensions) eventually becomes essentially a plane wave.

Harmonic Motion is a wave pattern of the sine curve type illustrated by Fig. 1-1A. All harmonic motion can be described by an equation of the form: $y = A \sin \omega t$ where: y = displacement of the disturbance, A = maximum displacement (which occurs at 90° and 270°), ω = circular frequency (to be defined in detail) in radians per second, t = time after disturbance is initiated.

Periodic Motion is a wave pattern compounded from two or more harmonic motions of different frequencies as in Fig. 1-1B. Periodic motions are analyzed by determining the various harmonic components. The character of any periodic motion is controlled by the number and magnitude of its various harmonic components.

Random Motion is a conglomeration of harmonic motions exhibiting little or no periodicity. Speech, squeaks, scraping, etc., all produce random motion unless they are sustained for long periods. The number of harmonic components is so great and their duration is so irregular as to make the harmonic analysis of random motion a practical impossibility. A typical wave pattern of random motion is shown in Fig. 1-1C.

Harmonic and periodic motions have certain defining characteristics which must be considered. These are:

Cycle, which is a sequence of events or motions that recur in exactly the same order in certain time intervals. For example, the motion of a pendulum started from one side, allowed to swing to the opposite and back to the starting side, comprises one complete cycle. This is illustrated in Fig. 1-1D.

Period is the time required for the motion to complete one set of recurring values, or one cycle. It is usually defined by the symbol T.

Frequency is the rate at which the cycles recur and is usually presented in one of two ways. If the frequency is given as ω, it is known as the circular frequency and has the dimensions, radians per second. The frequency may also be given as cycles per second or the symbol f in which case it is connected to the circular frequency by the relation: $f = \omega/2\pi$.

Wavelength is the distance between two corresponding points on harmonic or periodic waves (Fig. 1-1A) and is denoted by the symbol λ.

Fundamental Frequency is the lowest component frequency of a periodic wave motion.

Harmonic Frequency or overtone, when applied to music, is that component of a periodic wave motion whose frequency is an integral multiple of the fundamental frequency.

Sub-Harmonic Frequency is that component of a periodic wave whose frequency is an integral submultiple of the fundamental frequency.

An *Octave* is the interval between two waves whose frequencies are in the ratio of 1:2.

Each of these above four terms is illustrated in Fig. 1-1E.

Behavior of Sound Waves

From a purely physical concept, sound can be considered as an alteration in pressure, displacement of particles, or the velocity of particles in elastic media. These pressure or velocity changes are produced by a *transducer,* which is an electromechanical or electroacoustic system for converting electrical vibrations into mechanical or acoustical vibrations respectively. Microphones and loudspeakers are typical transducers as is the sounding diaphragm of Fig. 1-3. The motivating source for the diaphragm can be mechanical (as shown) or electrical as in the case of a loudspeaker. Since sound is a particular type of wave motion, it becomes desirable to consider particular behavior of waves.

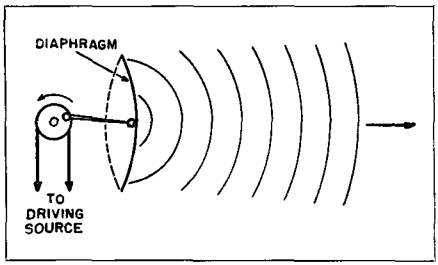

Fig. 1-3. Sound waves created by the movement of a mechanically-driven diaphrogm.

1. If two harmonic waves pass through the same point while vibrating at the same frequency, the resultant wave formed by adding the displacements will also be a harmonic wave.

2. Conversely, any harmonic wave can be resolved into a number of component harmonic waves. This principle is covered by *Fourier's Theorem.*

3. If two harmonic waves start at the same point and experience similar displacements at the same time, they are said to be *in phase* with each other. However, if one wave lags or leads the other, then they are said to be *out of phase* (Fig. 1-4B). It is customary to denote phase difference in angular units as that part of 360 degrees or 2π radians.

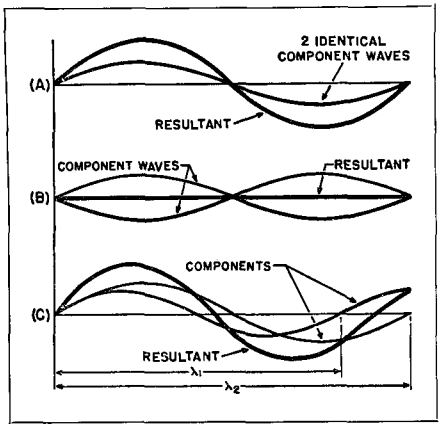

Fig. 1-4. The combination of two harmonic waves vibrating at the same frequency.

Almost everyone has witnessed some example of wave interference. For instance, in Fig. 1-4A, the component waves (both are identical and appear as one) form a harmonic wave at twice the original amplitude. This is said to be *constructive interference.* In Fig. 1-4B the component waves are of the same frequency and amplitude but 180 degrees out of phase, and therefore, cancel each other in what is called *destructive interference.* The resulting wave caused by the superposition of two waves of almost, but not quite the same frequency as in Fig. 1-4C has the characteristic of *beats,* i.e., alternate periods of constructive and destructive interference. Beat phenomena are particularly important in their application to superheterodyne reception.

When two identical waves travel with the same speed but in opposite directions, the resulting wave is known as a stationary or *standing wave.* While there is no translational motion, the vibratory displacements persist. The displacements are of equal magnitudes for distances one-half wavelength apart and the wave takes the form shown in Fig. 1-5A at some particular time and then reverses as shown in Fig. 1-5B. As

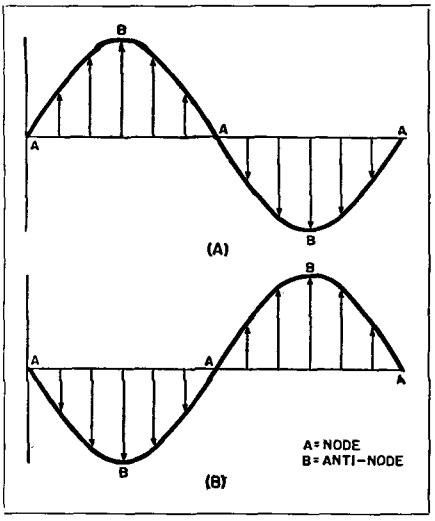

Fig. 1-5. Illustrates displacement of waves.

can be seen from the figure, certain portions of the wave experience little or no displacement. The points of maximum displacement are called *anti-nodal points* or *loops* and the points of zero displacement are called *nodal points.* Standing waves are of great importance in the theory of antenna design.

The Speed of Sound

The speed of sound in any medium is a function of the density and elastic qualities of the medium.

The variation of the speed of sound with temperature is expressed by the formula:

$$V_t = V_o \sqrt{1 + \frac{t}{273}}$$

where:

V_t = velocity at temperature t
V_o = standard velocity at 0° C
t = temperature in degrees C

The speed of sound in air at one atmosphere pressure at 0° C is approximately 1088 ft/sec. while at 100 atmospheres the speed of sound is 1150 ft/sec.

Pitch and Intensity

The pitch of a sound is best characterized by its frequency (Fig. 1-6) except for certain psychological effects. The audible range is known to be between 16 and 20,000 cycles per second, but the average ear does not hear below 30 cycles per second nor above 16,000 cycles. However the pitch, as received by the human ear, is not a direct function of the frequency but varies with the intensity. This effect has been investigated in considerable detail by Fletcher.[1]

While intensity is popularly considered to be synonymous with loudness, a distinct difference exists between the two. The former is a pure physical quantity while the latter is psychological in origin. In a strict physical sense, intensity is defined as the average rate of flow of energy per unit area in a direction normal to the rate of flow. It is expressed by the formula:

$$I = \frac{(P_{max})^2}{2\rho_o c}$$

where P_{max} = the maximum pressure developed above the steady pressure for no disturbance, c = wave velocity, ρ_o = medium density, I = intensity in watts/sq.cm.

The equation may also be written in the form:

$$I = \frac{1}{2} \rho_o c\, \omega^2\, d_{max}$$

where d_{max} = maximum displacement and ω = circular frequency = $2\pi f$.

For acoustic measurements, the choice of the equation depends on whether the recording instruments respond to pressure or displacement variations.

Current practice now employs the decibel as a relative measure of intensity. The bel (so named after Alexander Graham Bell) is defined as follows:

$$b = \log_{10} \frac{I_1}{I_2}$$

where I_1 and I_2 are the absolute intensities.

The bel is a large unit, an intensity ratio of 10 to 1 being equivalent to only 1 bel. This would mean dealing

[1]Fletcher, H., "Speech and Hearing," D. Van Nostrand, New York, 1929.

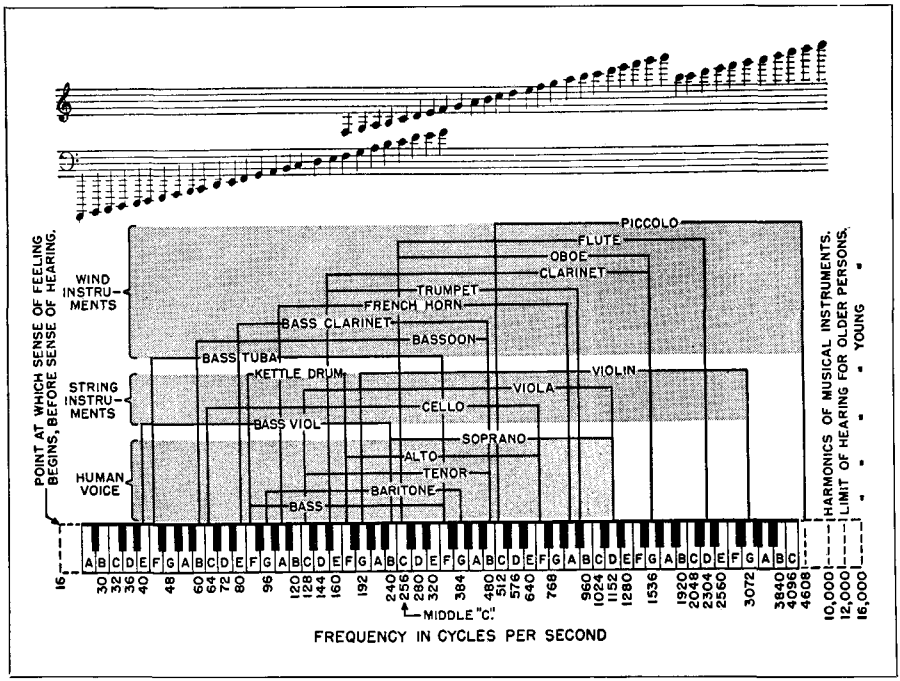

Fig. 1-6. Frequency range of musical instruments and those covering the human voice.

with rather small numbers, so it is customary to use the decibel, which is one tenth of a bel. Thus the numbers with which we deal are 10 times as large when speaking of bels. To convert to decibels, the value in bels must be multiplied by 10. Therefore:

$$\text{db.} = 10 \log_{10} \frac{I_1}{I_2}$$

An intensity ratio of 10 to 1 would thus be equivalent to 10 db., and 3 db. would be equivalent to an intensity ratio of 2 to 1.

On the other hand, the loudness of a tone is a function of its frequency and intensity and can be defined as the magnitude or stimulus it creates in the auditory system. This implies a relative measure of loudness and some *reference level* must be established for comparison. The tone emitted at 1000 cycles at 0 db. is taken as this level and the loudness of any particular tone is determined by adjusting the reference tone until it sounds as loud as the one being tested. The increase in intensity of the reference tone is interpreted in terms of loudness units. Fletcher and Munson have done much work along this line and their results have been published in the "*Journal of the Acoustical Society of America.*" Obviously, a certain amount of human error is bound to be injected into such measurements; however, correlation by statistical methods has yielded some very valuable information.

CHAPTER 2

History of Acoustical Recording

The history of "acoustical" recording machines and the transition to our present-day so-called "electrical" recording heads of the capacitive, magnetic, and crystal types.

● The great American inventor *Thomas Edison,* back in 1877, stumbled across what was to become the first recording and reproducing system. Edison used an *acoustical* method for recording and reproducing sound on a wax roll. Commercial use was not found for this invention until several years later when the *Ediphone,* a business dictating machine, was developed. Correspondence and other intelligence could be recorded on this unit and later transcribed from the wax cylinders. The early models utilized cylinders which could be used only once, but later ones were developed with a very thick coating of wax so that previous sounds could be scraped from the surface and the new surface reused.

The record industry had its origin in 1855 with Leon Scott's "Phonautograph". This was not a practical means for recording or reproducing sound as about all this machine could do was to trace grooves in lampblack.

The granddaddy of the present *Dictaphone* machines (shown in Fig. 2-1) was invented by *Alexander Graham Bell* and two associates in 1881. His machine employed a heavy metal casting to which was mounted a heavy steel rod, part of which acted as a "feed screw" to move the acoustical diaphragm in a horizontal plane. A wax coated cylinder was mounted to the shaft which, on Bell's invention, was hand-driven by a crank. This historic machine was removed from its vault in the Smithsonian Institute on October 27, 1937, where it had remained for 56 years. The wax cylinder when replayed revealed the following:

"The following words and sounds are recorded upon the cylinder of the *Gramophone* . . . tra tra . . . There are more things in Heaven and earth, Horatio, than are dreamed of in our philosophy . . . trr . . . I am a gramophone and my mother was a phonograph."

Later in 1885 the Volta Laboratories, controlled by Alexander Graham Bell, began filing new patents to make the invention commercially successful. The *American Gramophone Company* was organized in order to serve a market for these machines. Edison then began to exploit his machine commercially.[1]

There were a few patent difficulties between Edison and Volta. However, when these were worked out, they became very friendly competitors in this new field.

Emil Berliner then came into the picture and to him goes the credit for the records and phonographs we use today. Berliner devised a means for recording

[1]Walker, Frank B. RADIO AGE. January 1942.

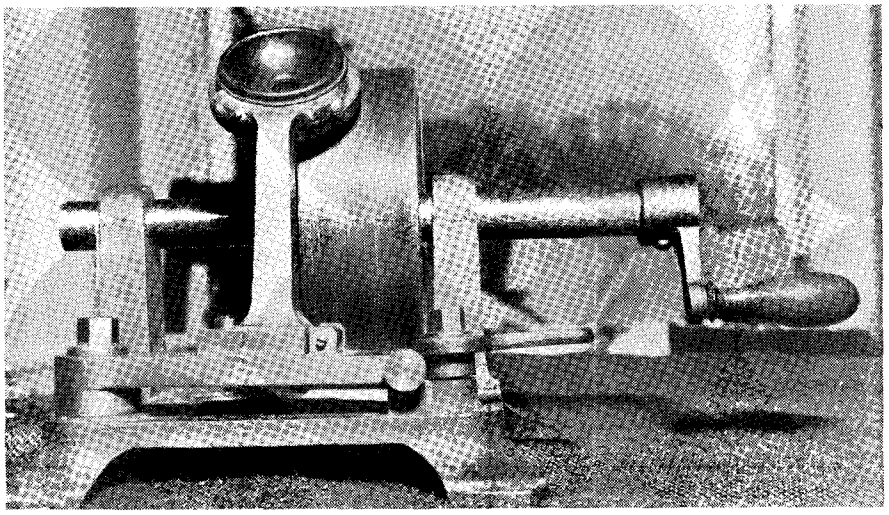

Fig. 2-1. The original Bell Gramophone (1881) now in the Smithsonian Institute.

on and reproducing sound from a flat disc. (Fig. 2-2.) Furthermore, he developed a means for pressing (making copies of) records from a master, rather than taking a chance of ruining the original disc, as was done by Edison and Volta. Berliner later became connected with a Camden machinist by the name of *Eldridge Johnson.* Johnson contributed many improvements to the original Berliner machine.

The Edison and Bell machines both worked on the same fundamental principle. In both cases, the waves set up in the air by any source of sound were allowed to strike a delicately held diaphragm which vibrated under the impact of the sound waves. The only difference was in the method of recording the sound on the rotating cylinder. In the Edison invention, the record was produced by indenting a line of varying radial depth, while Bell obtained the record by actually cutting the line on a blank cylinder. In both cases the vibrating diaphragm was made to produce a sound line of varying depth on the surface of the record.

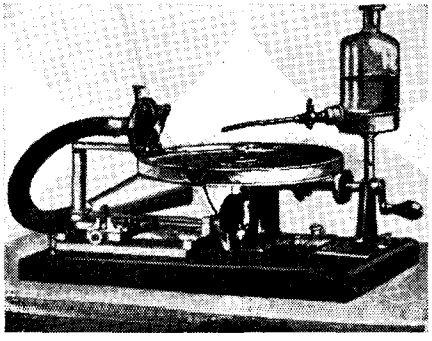

Fig. 2-2. Berliner's original machine which featured the use of a wax disc.

Berliner, in 1890, took out patents for further improvements in the Gramophone. In particular were new forms of diaphragm holders or sound boxes. One was designed for recording purposes and the other for reproducing. Even then the Gramophone had not become a commercial article. It was near the end of 1897 that the first disc record was manufactured commercially in the United States. This made the Gramophone popular as a means for entertainment. Instead of a record being made from an etched metal original, a disc record made by a new process which allowed many hundreds of good facsimile copies to be made from the one master record could be offered to the public. The process consisted of cutting the first record on a disc-shaped blank of a wax-like material. Later, a solid metal negative was made by

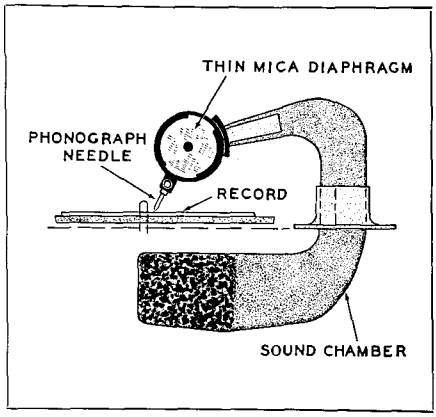

Fig. 2-3. Old type mechanical reproducer.

electrodeposition. Then followed the pressing of copies of the original from this negative in a material which was hard at normal temperatures but became plastic under heat.

The period that followed was devoted by several inventors to mechanical improvements for the machine. An efficient governor, or speed regulator, was provided to insure a uniform speed of rotation of the turntable. The hand-driven machine was abolished and a new machine, which was driven by a spring motor, substituted. The speed regulator was furnished with an indicator that showed the speed when the machine was running so that the records, on reproduction, could be revolved at exactly the same speed as the blank on which the original record was cut.

The sound box also went through a series of improvements, the inventors' object being to render the diaphragm as sensitive as possible, either to the sound waves of the selection being recorded or to the vibrations transmitted to it from the record disc, as the case might be. Other improvements were made in the means of conveying the sounds recreated in the sound box to the ear of the auditor (Fig. 2-3). The old air tube had disappeared to give place to a small horn. The sound box was attached to the narrow end. The next step was to remove the amplifying horn a short distance from the sound box and to carry it upon a rigid bracket on the cabinet of the instrument. The sound box was connected to the small end of the horn by a piece of flexible tubing which allowed the sound box to move across the turntable and also to be raised or lowered above the record. Patents were taken out in 1903 to replace this piece of tubing with a paper arm. A joint in the amplifying horn itself was also added. The idea was that while the horn could be located immediately next to the sound box, the latter could be moved with freedom without moving the heavy bell portion of the amplifying horn. The success of this invention was immediate and a tapering sound arm was adopted.

A modern version of this acoustical technique is shown in Fig. 2-4 A and B.

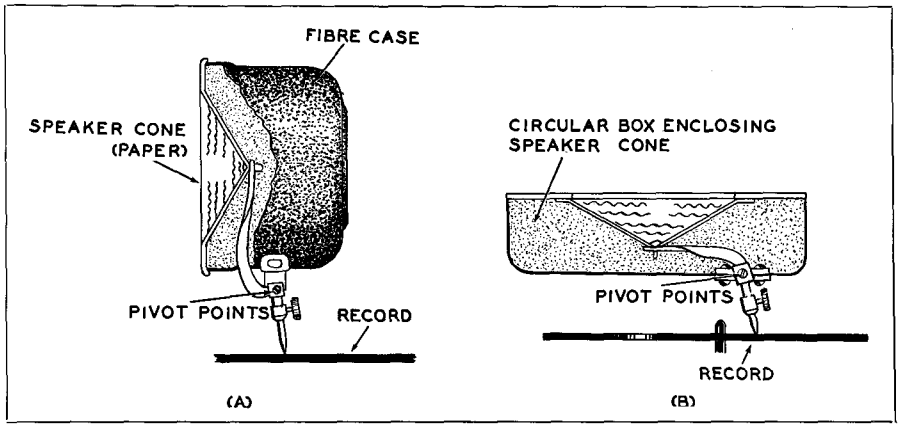

Fig. 2-4. Two relatively new types of acoustical sound reproducers.

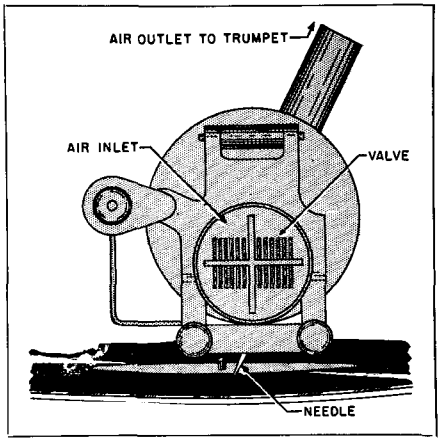

Fig. 2-5. Construction details of Parson's Auxetophone designed for intensifying sound by means of air pressure.

The Auxetophone

Sir Charles Parsons, English inventor, did much development work on the Gramophone. He perfected means for intensifying the sound by using air valves. Improvements in sound reproducers or intensifiers (as they were then called) applicable to phonographs, Gramophones, telephones, etc. were replaced by Parsons with the well-known mica diaphragm and by a very finely adjusted valve which controlled the flow of a column of air supplied under pressure. (Fig. 2-5). The action of Parson's invention, which he called the *Auxetophone,* was as follows: As the needle followed the sinuosities of the sound line on the record, the valve moved with it and this opened and closed the slots in the valve seat through which the air was rushing. The air was therefore given minute pulsations corresponding to the undulations in the sound record so that sound waves identical with those originally recorded were set up in the surrounding air and traveled to the ear of the hearer. The valve was mounted on a weigh bar rigidly connected to the reproducing stylus bar or needle holder. This weigh bar was capable of oscillating rotationally only about its own axis. A box containing a filter was also provided to insure that the air, before entering the valve, was perfectly clean. Very fine adjustments of the valve would be unbalanced if particles of dust or oil got into the unit.

Later patents taken out by Parsons related to musical instruments. Patents described the use of a valve as adapted to stringed instruments such as a violin, violoncello, bass, double bass, pianoforte, harpe, etc. He replaced the usual sounding board or membrane by a valve operated directly by the vibrations of the strings. The valve was substantially the same as previously described and, as applied to a violin, was supported from a structure on which the bridge was carried, the sounding board being removed. On the exit side of the valve an expanding trumpet was provided and this was lined with velvet which had the effect of damping out any scratching sounds and very high harmonics.

Parsons' further contributions to the art included means for attaching Gramophone needles to the sound reproducer. He made the hole for the needle diamond shaped so that when in use the needle seated itself in the hole by the pressure between the socket and the record. To retain the needle in position when the reproducer was not resting on the record, he provided a small magnet with its poles sufficiently near the needle to keep it in a slanting position. Alternately, instead of using a magnet, a very light spring attached to the socket arm was used, pressing lightly against the needle to keep it from falling out.

Parsons took out other patents that contributed further to improvement of sound quality. One of these patents covered the use of an elastic connection joining the needle and the moving part of the valve. The object of this invention was to provide means whereby scratching sounds and changes of tone were reduced or eliminated. A better and more uniform reproduction of the original sound resulted. He also took out a patent covering the use of a compensating cylinder and piston which rendered the working position of the

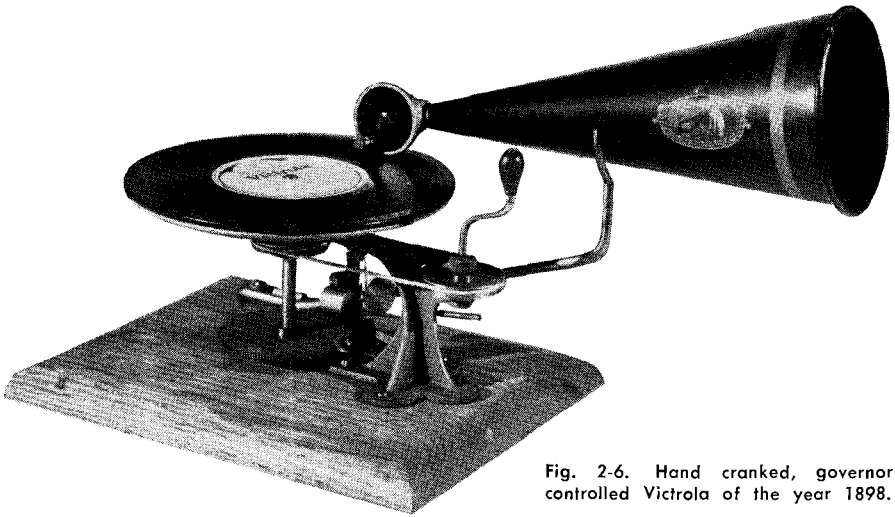

Fig. 2-6. Hand cranked, governor controlled Victrola of the year 1898.

valve independent of fluctuations of air pressure. It was found that the mean position of the valves was disturbed by differences of fluctuations of air pressure from the supply with the result that the tone or power of the instrument was thereby affected.[2]

The *Victor Talking Machine Company* was formed in 1898. One of the earliest of their products is shown in Fig. 2-6. This was the old-fashioned acoustical horn style phonograph so familiar to many of our parents and grandparents.

It should be remembered that all of the previous instruments described are essentially acoustical in operation. They relied almost entirely upon sound pressure, or pressure striking a diaphragm (Fig. 2-7), and actuating a needle or other device. A typical recording setup of an orchestra making an acoustical record is shown in Fig. 2-8. Here we see that the musicians are literally crowded in front of a long horn. The weaker instruments, those having the lowest amplitudes of sound, were placed forward, while those possessing greater power, volume or amplitude, were placed further to the rear. The idea was for the musicians to play as loud as possible in order that the greatest possible volume would enter the horn.

At the smallest terminating point of the horn was stretched a diaphragm in a framework. The diaphragm (with stylus attached) picked up the sound pressure waves entering the horn from

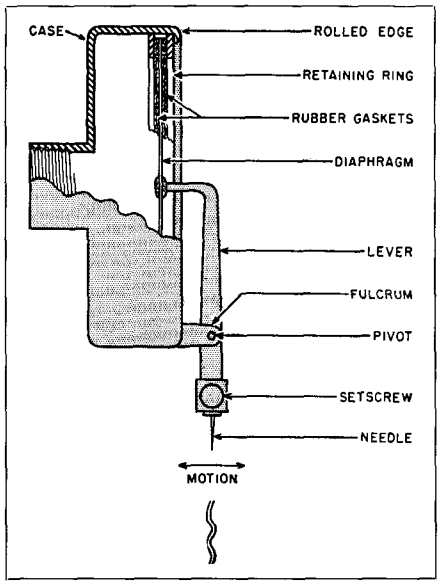

Fig. 2-7. Construction of an acoustical reproducer used with early phonographs.

[2]Heaton Works Journal, Dec. 1934—p. 251.

Fig. 2-8. Rosario Bourdon and the Victor Solon Orchestra recording in the early '20's.

the instruments of the orchestra and the sound waves were modulated onto the master record of wax (Fig. 2-9). A reversed process was used for playback.

While the literature does not disclose why the standard speed of 78 rpm was chosen for the phonograph industry, apparently this just happened to be the speed created by one of the early machines and, for no other reason continued to be used. In those early days, speed was an important factor in getting satisfactory quality from the records. The phonograph turntable had to revolve at considerable speed in order that the high notes (and there were few in those days) could be reproduced, a process which will be explained in later chapters. Finished records were reproduced by means of another horn connected to a diaphragm to which was fastened the reproducing needle. Sound waves appearing in the grooves of the record would move the needle from side to side and thus transmit vibrations to the diaphragm as shown in Fig. 2-7. Sound waves would then pass through the horn and be amplified somewhat by the "focusing effect" of the horn—Fig. 2-10.

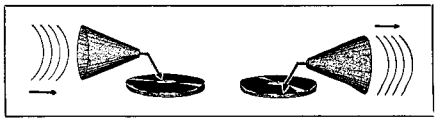

Fig. 2-9. Simplified process for recording and reproducing acoustical records.

Thus, we have the earliest acoustical recording and reproducing systems. Today, as we all know, electronics plays a dominant part in the recording and reproduction of sound. The fundamentals, however, remain basically the same. Undulations in recorded grooves are transformed into electrical vibrations which are amplified by means of suitable amplifying equipment and reproduced through modern speaker systems.

Electrical Recording

Electrical recording was borrowed from the radio, the microphone and the vacuum tube amplifier which had, by 1927, supplanted the old method of singing, talking or playing directly into a horn. This latter system depended upon the sound wave pressure to activate a diaphragm and needle to do the cutting.[3]

[3]Jewell, F. A. "Combining the Phonograph and Radio," RADIO NEWS, April, 1927, page 1238.

Fig. 2-10. Horn-style Victrola which was introduced to the public in the year 1902.

In the early acoustical system, which was far from perfect, most of the harmonics and overtones were completely lost and even some of the fundamental waves, especially the low, or bass notes, failed to register. The adoption of the microphone amplifier and an electrically operated cutting stylus overcame most of the problems. The result was the production of much better records.

The earliest forms of electrical pickups were of the *carbon* or *magnetic* types. In 1927 a new pickup was introduced which relied on the *capacity* effect of its elements. Both the carbon and the magnetic types of pickup, al-

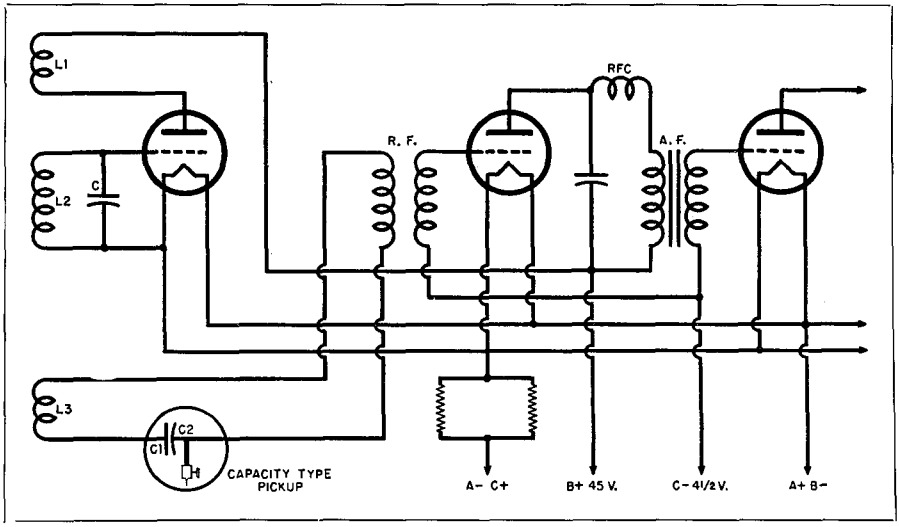

Fig. 2-11. How the capacity pickup of 1927 was connected to an audio amplifier.

though superior to the old acoustical pickups, were far from perfect and their faults were many. For instance, in the carbon type, the instability of the carbon granules caused a fuzzy blowing sound. These carbon granules soon became packed when electrical current passed through them and they would adhere to one another. In addition, the modulated electrical current was far from being an exact duplicate of the sound waves that were cut on the record.

In the magnetic type there was the problem of inertia from the relatively heavy iron armature which was held by a stiff spring to overcome the magnetic pull of the pole pieces and to prevent the armature from "freezing" to one of the pole pieces. Thus the inertia of the heavy iron armature and the tension of the spring made it very difficult for the instrument to respond to the delicate harmonics and overtones. The natural frequency of vibration of the armature, which was in the audio range, caused a blasting on certain notes. Furthermore, the energy generated by the movement of the armature to and from the pole pieces was in direct proportion to the square of the distance of travel. That meant that the current output was distorted relative to the sound waves cut on the record. It should be pointed out that the modern magnetic pickup has overcome these difficulties.

The Capacity Pickup

The new capacity or "modulator" pickup, as it was then called, is diagrammed in Fig. 2-11. The drawing briefly explains the system. The first tube is oscillating at a frequency governed by the inductances of L_1 and L_2 and the capacity C. Any conventional oscillating circuit may be used with this pickup. Inductively coupled to the oscillating coil is a pickup coil, L_3, which is in series with a capacity type pickup, $C_1 - C_2$, and a radio frequency transformer, *R.F.*, which is broadly tuned to the frequency of the oscillations. The amount of radio frequency current flowing in the primary of the rf transformer is governed by the capacity of $C_1 - C_2$. Plate C_1 is fixed, while C_2 vibrates, causing a variable radio frequency current to flow in the circuit in exact proportion to the vibration. C_2 is fastened to a stylus that is traveling in a groove on the record and is vibrated by the sound waves cut in the record groove. Thus, the modulated rf current flowing in the primary of the rf transformer is transferred to the secondary and rectified by any of the conventional detector circuits, passed through the usual filter circuit and then on to the audio amplifier and loudspeaker.

Inasmuch as the frequency passing through $C_1 - C_2$ is very high, these plates are mechanically very small. Consequently, the vibrating member is very light, usually being made of aluminum. As this vibrating member does not have to perform any appreciable mechanical work (such as moving an air column or working against a heavy spring tension, as in a magnetic type pickup) it is allowed to "float" in the record groove. As it has very small inertia, it can readily respond to all the delicate overtones as well as all the fundamental notes. There is only one frequency to contend with, that of the oscillator, and since the only function of the capacity type of pickup is to vary the amplitude of this frequency, no difficulty was encountered in designing a circuit that would respond to the variations.

When the modulated radio frequency current is rectified in the detector circuit and filtered, an electrical wave which exactly corresponds to the sound waves put on the record is transmitted to the audio amplifier for additional reinforcement.

Thus we have the transition from earliest acoustical systems to electrical recording techniques.

CHAPTER 3

Basic Recording Methods

Basic methods for engraving and embossing sound on film and disc, magnetic recording on tape, disc, and wire, and magnetic and optical film recording systems.

Sound on Disc

● Present day records are the result of modulated grooves which have been cut on to a revolving wax plate or disc. From this disc, through intricate processing, are made the pressings familiar to all of you in the form of records purchased at your local record store. The basic media for making the necessary engravings or modulations on the disc are by means of a "cutter" which may be either magnetic, crystal or some of the new forms of dynamic instruments.

In order to understand what actually takes place at the cutting head, it is necessary to visualize the action of the stylus (the cutting needle) as it swings from side to side within the record groove. Its operation is similar to that of an engraving process done by hand. Instead of the hand guiding a cutting tool, a magnet or other source for actuating the cutting stylus is used.

If a magnet is arranged as shown in Fig. 3-1, and a coil of wire placed in the position indicated, the magnetic field will be disturbed if a varying current (sound) is passed through the coil. If an iron armature is placed within the coil and a cutting stylus attached, this disturbance will actually move the stylus within the field set up by the poles of the magnet.

This side-to-side motion does the engraving (modulating) on the walls of the groove. The high notes cause very small engravings, while the low bass notes actually cut deeper into the walls which are the sides of the groove. In other words, the action becomes more violent as the notes become lower. Bass notes, as a rule, have greater power or amplitude than high notes. This accounts for a greater swing of the cutting stylus from side to side.

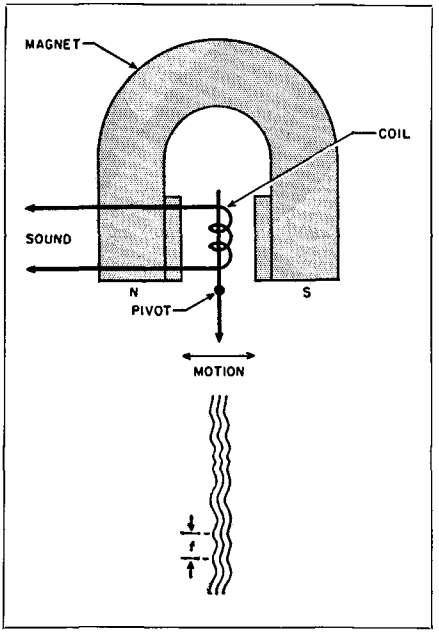

Fig. 3-1. Simplified construction of the electromagnetic cutter and its action.

From this explanation, we see that we must not give the low notes too much power from the amplifier. To do so would cause the stylus to cut right over to the adjacent grooves which would spoil the record. Fig. 3-1 also illustrates how these notes appear on the record. The illustration is greatly enlarged for detail. Observe how the grooves take on the appearance of a winding stream as it might look to a pilot in an airplane from a high altitude. These grooves appear as straight lines when the needle is at rest. That is, the side-to-side motion stops and the groove is left unmodulated or free from sound.

To complete the explanation, let us begin at the microphone and follow the sound waves all the way to the cutting stylus resting on the disc.

The sound waves are set up by the person speaking into the microphone. These waves actuate the mike in such a manner that these minute waves set up electrical variations in current in the microphone which follow the sound waves in cadence. These electrical current variations, although extremely small, pass through an audio amplifier where they are amplified to a value high enough to furnish audio power to the cutter and to move the cutting needle (stylus) which is resting on the revolving record disc.

It stands to reason that if these current variations were weak, the cutting stylus would not receive enough power at the cutting head to drive the stylus from side to side in the groove. The result would be too much surface noise and not enough sound when the record was reproduced. On the other hand, if too much power is used, a poor record results, as will be explained in later chapters.

Not only must the cutting stylus modulate the sound into the groove but, in modern practice, must also chisel out the groove itself. Thus, we have two basic actions: One, the creation or cutting of the grooves into the record material, which in the case of home recording, consists of a glass, paper, or metal base disc coated with lacquer, some form of acetate, etc. Second, the side-to-side vibrations of the stylus will be created from the sound entering the cutting head. Hence, modulation takes place at the same time the groove is being cut. The *groove* itself is that part of the material which is cut or chiseled out of the record. The *land* is that part of the disc remaining uncut between grooves. The material chiseled out by means of the cutting stylus is called the *chip* or *scrap*.

So far we have dealt briefly with the lateral type of disc recording whereby a moving stylus actually cuts from and modulates a groove in a plastic or lacquer coated disc. Several improvements have been made in order to gain more time on a record of given size. Among these are the methods for "embossing" sound on disc at *constant groove speed.*

Constant Speed Embossing

Constant groove speed, as the words imply, means that the linear speed of the recording track or groove, in inches per second, is fixed (see Fig. 3-2A). This remains constant regardless of record

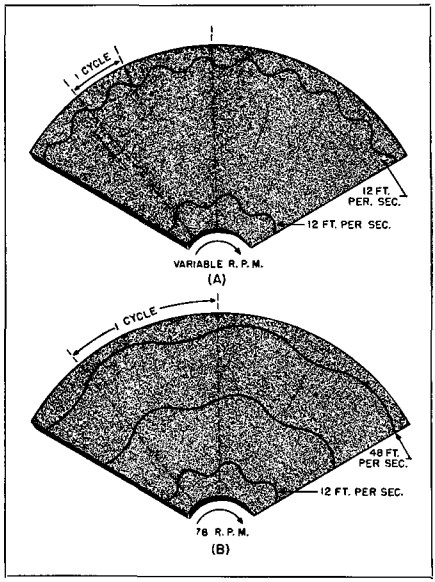

Fig. 3-2. (A) Modulation by constant groove speed. (B) Constant hub speed produces variable groove speeds.

diameter. In the conventional phonograph, a fixed turntable speed is employed resulting in a very high speed in the outer circumference. Linear speed becomes progressively slower as the smaller inner circumferences are approached (Fig. 3-2B). The result is that varying amounts of distortion of the original sound are present. This is especially true at 33⅓ rpm. In order to compensate for the variable speed, several forms of equalization are required in order to boost the high notes as the speed becomes slower at the smaller diameters.

Constant groove speed techniques have been employed successfully in the design of highly efficient dictating machines such as the *Gray Audograph.* Vinylite records 10/1000 in. thick in sizes from 5⅝ to 8½ in. diameter provide up to 31 minutes of dictation.

A roller drive at the stylus head provides constant recording speed. This speed is selected so that the maximum amount of dictation consistent with high intelligibility in sound reproduction can be embossed on the record (260 lines to the inch). This driving method does not require an extra mechanism to change rotational speed as the record center moves away from the stylus. The combination recording and reproducing head is illustrated in Fig. 3-3A and the action in Fig. 3-3B.

Three problems are encountered in playback stylus design; adjustment to vertical irregularities, adjustment to minute deviations from the Archimedes spiral that is theoretically traced during recording, and sensitive reproduction of the modulation pattern. The *Audograph* playback system comprises

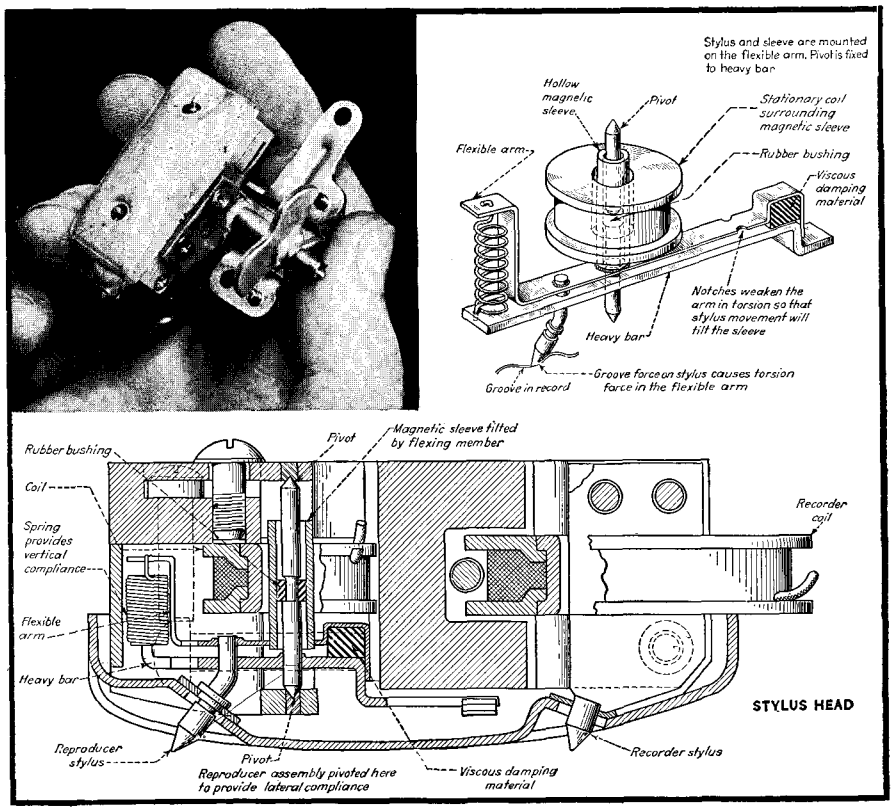

Fig. 3-3A. Audograph record-playback head assembly for embossing sound on Vinylite records.

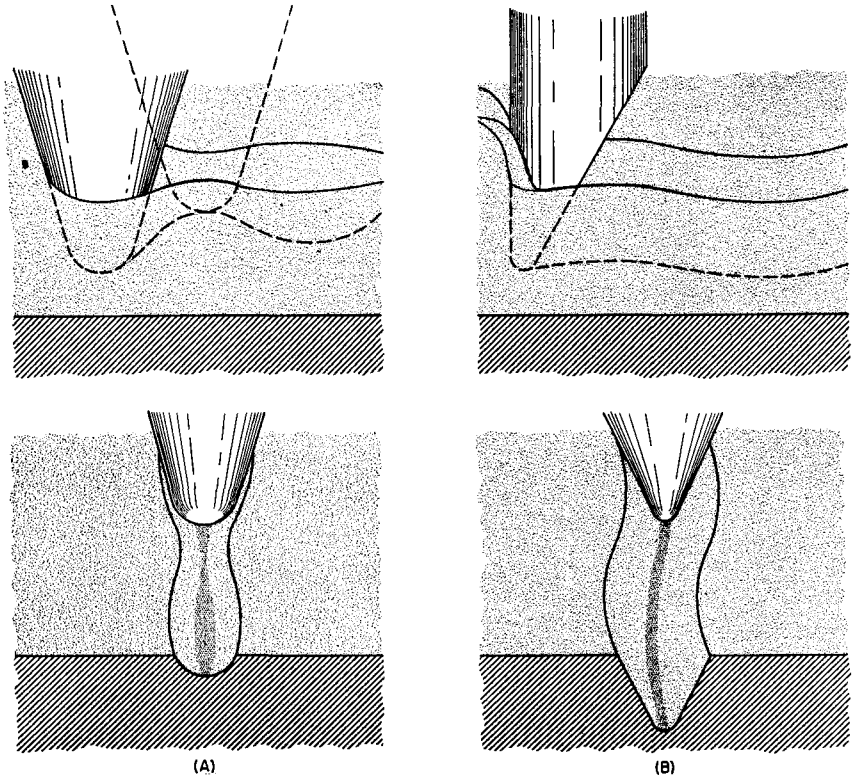

Fig. 3-3B. (A) Embossing action of a dull stylus moving vertically. (B) Engraving action of a cutting stylus that is moving laterally.

a stylus fixed on a flexible arm that is mounted on a heavy bar, a magnetic sleeve vertically set on the arm, a pivot shaft rubber-mounted in the sleeve, and a stationary coil surrounding the sleeve. Permanent magnets in the stylus head form a field about the coil. Lateral compliance is furnished by the heavy bar turning on the pivot; vertical compliance by the spring-loaded flexible arm.

Modulation reproduction can be followed from the schematic sketch. The groove force acts on the flexible arm through the stylus and weak torsion resistance, caused by the notches in the rear of the flexible arm, will permit the arm to tilt. This action tilts the sleeve mounted on the arm. As the ends of the sleeve rock forward, (one pole, then the other) lines of flux flow through the magnetic sleeve, first in one direction and then in the other. This induces a voltage in the coil that electrically repeats the modulation pattern.

A belt reduction drive from the motor turns the driving roller. The idler roller, pressing the record against the driving roller, turns the record at a constant groove speed which is maintained throughout the recording. The angular velocity varies with the linear distance of the driving roller from the record axis. As the record turns the spindle, the carriage mechanism inside the case moves the record to the left.

A worm gear on the end of the spindle shaft engages a pinion on the end of the feed screw. Thus when the record turns, the feed screw is rotated. The feed screw, turning in engagement with the fixed worm pinion, is moved to the left, taking with it the carriage

assembly that holds the spindle and record. In this manner, the record is slowly moved to the left while the driving roller rotates it beneath the recording stylus.

Sound on Film (Optical Methods)

Original talking motion pictures were made possible by means of sound recorded on regular transcription discs and synchronized with the action as it appeared on the screen. This method became obsolete and was supplanted by the improved "optical" sound-on-film systems.

There are two optical methods for recording sound on film. One is the *Movietone* method wherein the variations in sound are produced by *variable density* (variations in light through a sound track). This sound track has constant width along one edge of the film. See Fig. 3-4A. The other most commonly used method is the so-called *variable area* type. *(R.C.A. Photophone.)* Here the density remains fixed while the width of the sound track varies in accordance with the sound, as illustrated in Fig. 3-4B.

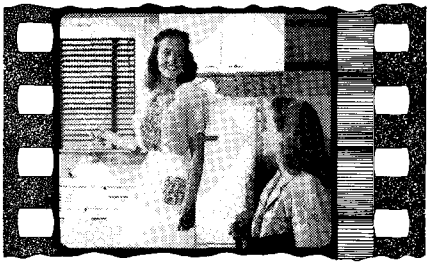

(A)

(B)

Fig. 3-4. (A) Variable density sound track on 35 mm. movie film. (B) Variable area sound track as it appears on a single frame.

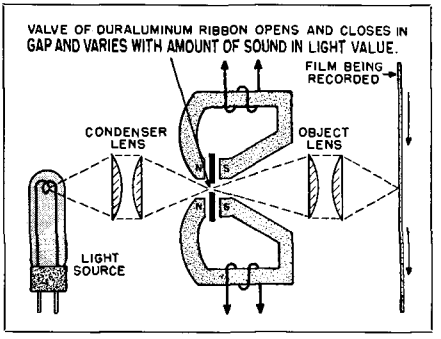

Fig. 3-5. The essential elements employed in variable density recording.

Variable density recording depends primarily upon the action of a "light valve." Basically, this valve consists of a loop of duraluminum ribbon, .003 in. thick and .006 in. wide, which is suspended in a very narrow slit between the two pole pieces of an electromagnet. Light from the exciter lamp is condensed and focused by means of a condenser lens system into a tiny path which shines through the slit in the light valve formed by the position of the duraluminum ribbons (Fig. 3-5). An objective lens system focuses and concentrates the tiny light beam onto the sensitized negative film which is traveling at a speed which is synchronized with the picture camera. The audio currents produce varying magnetic fields through the duraluminum ribbon loop. The varying magnetic fields cause the sides of the ribbon to repel each other. The amount of audio current flowing through the coils on the magnet governs the width of the slit, which in turn limits the amount of light that can pass through.

Reproduction from sound on film, employing the variable density technique, is shown in Fig. 3-6. The light from the exciter lamp, being focused into a very narrow beam, actually shines through the film to the photoelectric cell. The photocell, which is sensitive to variations of light, will pass minute variable electrical currents. These are then amplified by the audio system and fed

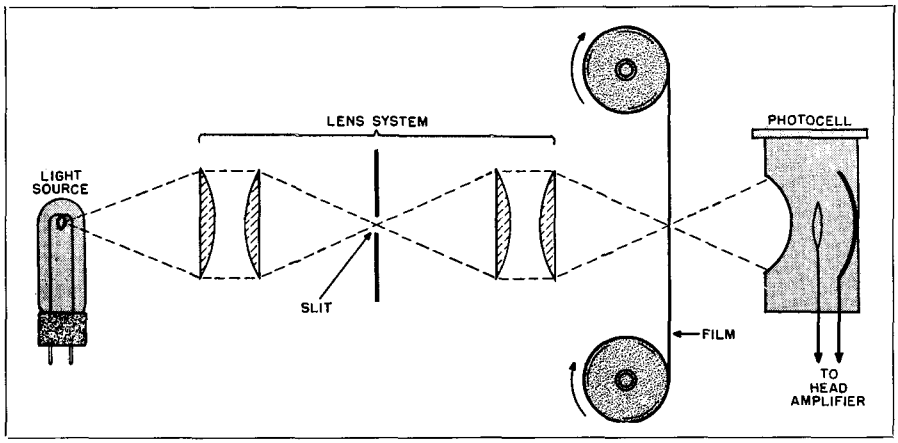

Fig. 3-6. Basic system for reproducing sound on film by optical methods.

through the loudspeakers. The changes in the frequency of the sound are determined by the number of changes in film density per-inch-length of the sound track. The changes in the intensity of the sound are determined by the changes in the density or darkness of the lines on the sound track as the film passes the narrow beam of light. The light and dark lines on the sound track are continually interrupting the light going through the film. These interruptions vary the output currents of the photoelectric cell. Upon amplification, these variations or interruptions appear as sound waves and are reproduced through the speaker.

The fundamental setup for recording sound on film by means of the *variable area* method is shown in Fig. 3-7. Recording is accomplished by means of an oscillograph whose mirror is actuated by the variations in the intensity and frequency of the output voltage of the photocell. This, accordingly, throws a strong beam of variable light onto a moving film. These variations of light correspond to sound variations. They are recorded as a single heavy jagged line that looks very much like a series of high mountain peaks, as might be observed from a distance. Reproduction is similar to that of Fig. 3-6.

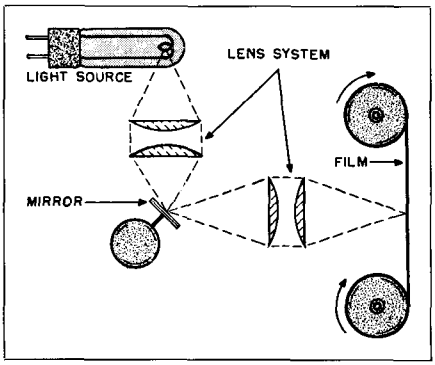

Fig. 3-7. The essential elements used for variable area optical recording.

Embossing Sound on Film

One of the newer developments in sound-on-film is the technique employed to *emboss* sounds by means of a vertically driven stylus directly onto specially prepared film. One such machine, the *Filmgraph,* employs an endless loop of film (See Fig. 3-8) which is placed in a magazine. The recording time depends upon the length of the loop used. Loops can be used for fifteen minutes', one hour's, two hours', five hours' and even up to eleven hours' recording. The loop moves forward continuously through the machine and no rewinding of the film is necessary. For example, if the recording is started on track No. 1, it automatically moves over to track No. 2 at the end of recording on track No. 1. This automatic movement continues until all tracks across the width of the

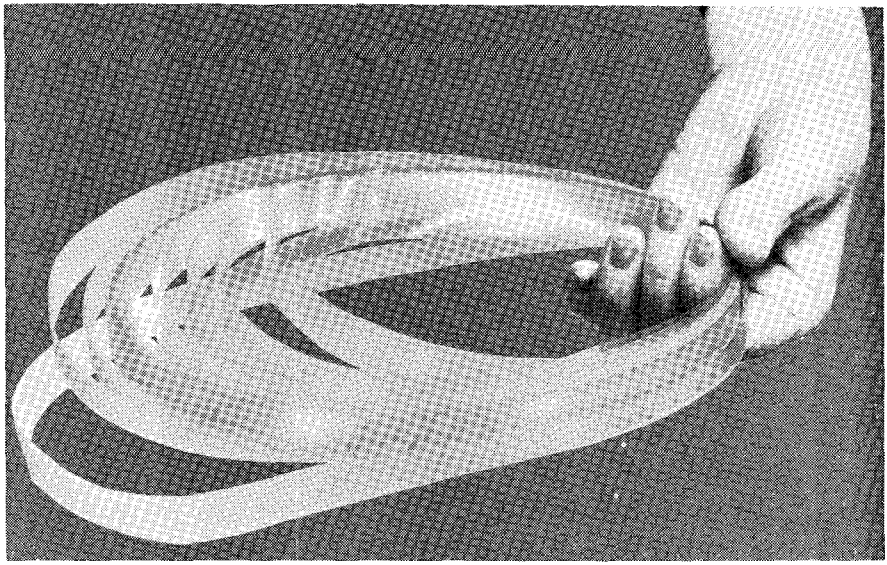

Fig. 3-8. Endless loop of 35 mm. film used in the Filmgraph recorder.

film are indented or embossed. The track on which material is being recorded is indicated on a dial and this number changes as the stylus moves from one track to the other. Any track may be played back at any time by moving the stylus manually, by means of a control knob, to the desired number. Means are provided to start and stop the recording or playback instantly on a single word or syllable. A speed control is used on this type of machine for recording or playback.

The sound track is formed by indenting a groove into the film. The 16 mm. film is five-eighths of an inch wide and five-thousandths of an inch thick. A permanent type sapphire stylus of special design is used in the dual-purpose head for recording and playback.

The number of sound tracks that can be recorded on film depends on the physical width of the film. Sixteen or thirty-five millimeter film provides between forty and one hundred sound tracks. Sound may also be recorded on home movie film as shown in Fig. 3-9.

On the *Recordgraph* machine, sound is permanently embossed on thirty-five millimeter cellulose acetate film having a base material which is fire resistant and free of abrasives. No processing of the film is required before reproduction. Continuous recording with automatic trackover from groove to groove in the film is available. One hundred and fifteen tracks can be accommodated on one side of thirty-five millimeter film. Means are provided for the recording and also the locating of a particular track for playback as desired.

One of the earlier known methods of embossing is known as the *Western Electric* hill-and-dale recording technique. This is still used for many electrical transcriptions. Instead of a stylus moving laterally within a groove of a record, the stylus moves in a vertical plane and sound is actually cut and embossed by this motion.

Magnetic Sound for Motion Pictures

Three fundamentally different sound recording methods can be used with motion pictures. For a long time the mechanically cut or embossed recording was the most highly developed, and the first talkies used a phonograph disc synchronized with the picture. An opti-

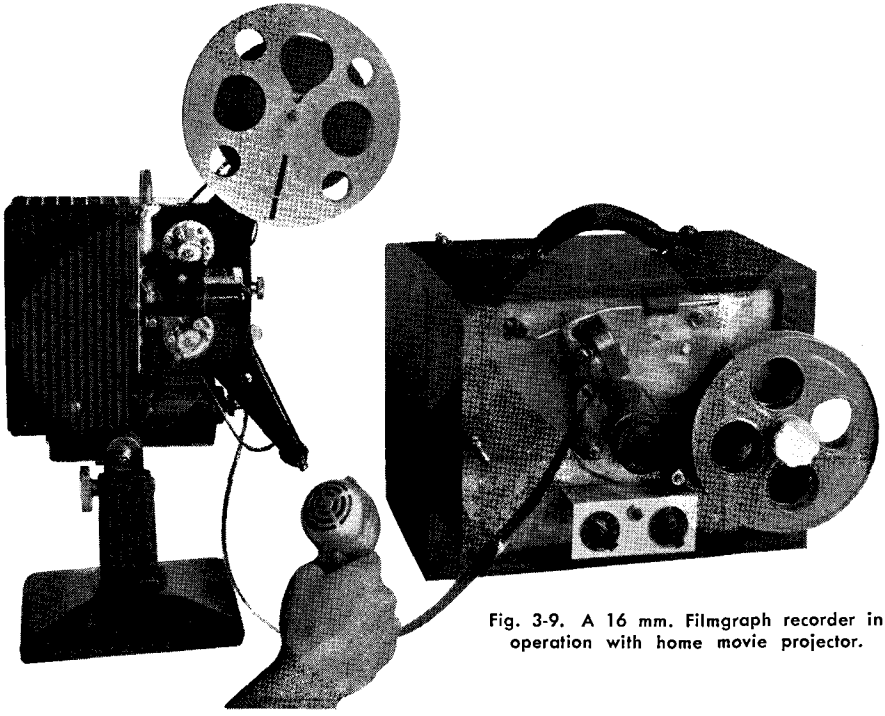

Fig. 3-9. A 16 mm. Filmgraph recorder in operation with home movie projector.

cal sound track, however, is so satisfactory for most sound on film work that it has been used almost exclusively. Magnetic recording of motion picture film offers some real advantages over other systems and is rapidly taking its place with accepted techniques.

Optical Recording Advantages

Better resolution—better high frequency response at a given speed.

No direct contact of recording head with the film—no wear or clogging problems.

Ease of duplication—direct contact printing.

Optical Recording Disadvantages

Requires developing before record can be played back.

Relatively expensive.

Cannot be monitored immediately.

Film technique—must be handled in the dark—expiration dates—processing skill required.

Magnetic Recording Advantages

Simplicity.

Low cost of the magnetic system.

Immediate monitoring if desired.

No processing.

Magnetic record medium can be erased by demagnetizing and used over again (economy of material.)

Parts of sound track can be edited by erasing, and dubbing in new sound.

No serious distortion with overmodulation.

Magnetic Recording Disadvantages

Head contacts the film—possibility of wear.

Technical performance not quite equal to the best possible with advanced optical methods.

It should be pointed out that the above facts are based on the present state of the art. In the last decade work done with film recording has been outstanding, especially with the advent

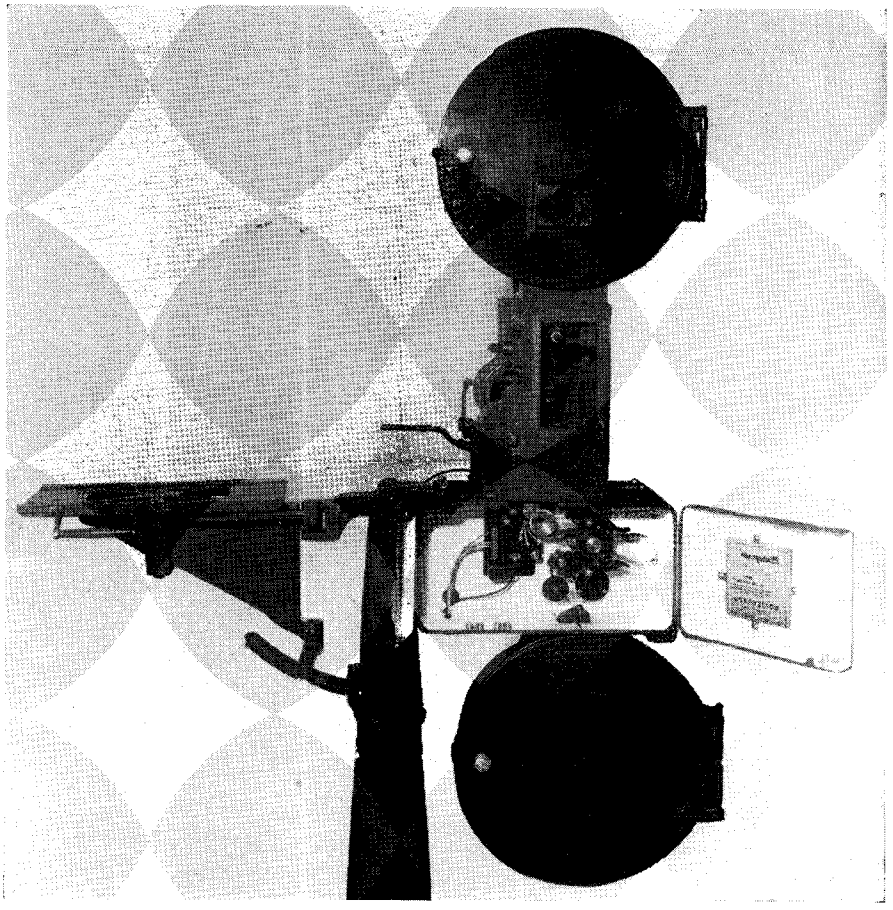

Fig. 3-10.

of fine grain films and ultraviolet optics. It appears that film recording techniques have approached closely to theoretical limits of perfection, and there is no reason to expect revolutionary changes in the near future. On the other hand, we have by no means reached the ultimate in magnetic recording heads or media. Theoretically a magnetic track can be at least as good as an optical one, and magnetic recording should give a greater dynamic range without resorting to artificial noise reduction schemes.

In constructing a recording machine for studio work, 35 mm. equipment is chosen because excellent wow-free, rigidly built film machines are available. These can be converted to magnetic recorders with a minimum of trouble. A sound-on-film recording machine built up from standard equipment is shown in Fig. 3-10. The magnetic film, stored on the upper reel, is pulled into the sound head by sprockets of an old Simplex projector from which the intermittent mechanism was removed. The sound head is the latest *Motiograph* type. From this the exciter lamp, photocell, and optical systems were removed. In their place was mounted a plate containing three magnetic heads as shown in Fig. 3-11. These heads contact the film while it is against a rotary-stabilized drum. The film then feeds over a sprocket and on to a takeup reel in the conventional manner.

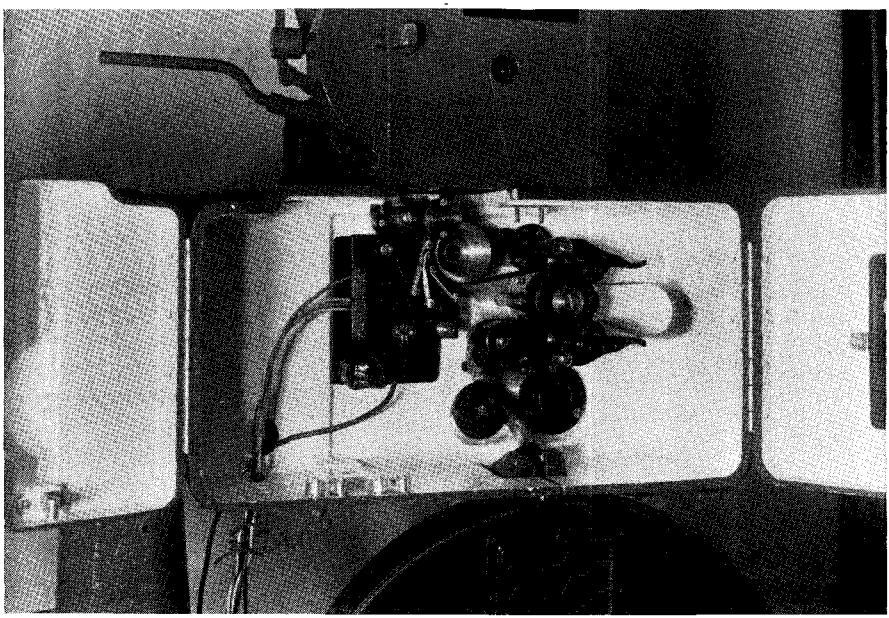

Fig. 3-11.

Magnetic Heads

The magnetic head assembly is illustrated in Fig. 3-12. A rigidly mounted adjustable plate holds three heads. Each head has an individual arm, springbiased against the film while the latter rides against the stabilized brass drum. The upper head is for erasing; it clears the magnetic track from any previous record and prepares it for receiving a new record. The erase coil is fed with high frequency energy at 40 kilocycles. Although a half ampere of current is sufficient for demagnetization, approximately one ampere is used to insure perfect cleaning.

Recording is accomplished by the center head which contains a main audio winding and an auxiliary high frequency coil. The auxiliary coil is connected in series with the erase coil to secure proper high frequency excitation. The audio winding is energized with signal current from the audio amplifier.

Below the recording head, and spaced from it, is the monitor or playback head. This is surrounded by a mu-metal shield to isolate it from direct pickup of magnetic flux from the recording head. The pickup head feeds through an amplifier, and reproduces the sound which has been recorded on the film 50 milliseconds before. It is thus possible to monitor the record as it is being made. Distortion, etc., caused by improper adjustment is detected immediately, and steps can be taken to correct any faults without delay.

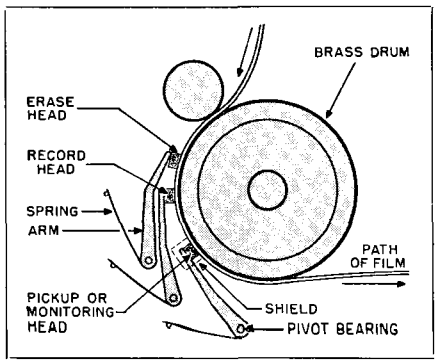

Fig. 3-12. Triple head assembly for recording and reproducing (magnetically) on film.

For best results it has been found advantageous to use "graded" sizes of magnetic heads. The erase head is 0.240 inch wide; it clears a track almost 1/16 inch wider than the pickup channel space needed. The recording head is 0.200 inch wide. The pickup head is made 0.187 inch wide, and does not cover the entire recorded track. With an arrangement such as this, slight errors in lateral alignment are not serious, and do not result in distortion or cross talk.

Magnetic Film

The recording film itself is a new product of special interest. A cross section through a piece of 35 mm. magnetic film is shown in Fig. 3-13A. Standard acetate or nitrate stock is used for base material. Instead of the usual emulsion (or in addition to it) a half mil coating of special magnetic material is used. The magnetic material is very finely divided, having a particle size of one micron or less, dispersed in a binder which gives a good bond to the base material.

Approximate magnetic properties of the coating in its final form are:

Coersive force ..... $H_c = 350$
Residual magnetization ..... $B_r = 500$
Maximum field for above readings ..... $B_m = 1000$

It is noteworthy that high magnetic properties can be attained with peak fields as low as 500 or 700. This means that the material not only can be magnetized easily but also can be erased readily. Complete erasing by the high frequency method has always been difficult with previous high-coercive materials because of the high saturation fields required. As has been noted in previous work a high B_r contributes to low frequency output, while a high H_c gives good high frequency response. Also a high H_c insures that the record will be less influenced by stray magnetic fields which could cause deterioration, especially of the high frequencies.

Dimensions of the sound tracks are given in Fig. 3-13B. The useful working space on a 35 mm. film coated all the way across is approximately an inch. Four sound tracks, each 3/16 inch wide and spaced approximately 1/16 inch apart can be accommodated. Ordinarily only one channel is used, but the availability of the other channels offers some interesting possibilities:

1. Microphones might be placed in several positions, each pickup recorded on its own channel, and the best "take" chosen. This might be important for news events where everything must be right the first time.
2. Binaural or stereophonic recording is possible.
3. One or more tracks can be used for control purposes.
4. In editing, background music, sound effects, and control signals can be put on the side tracks. These can be

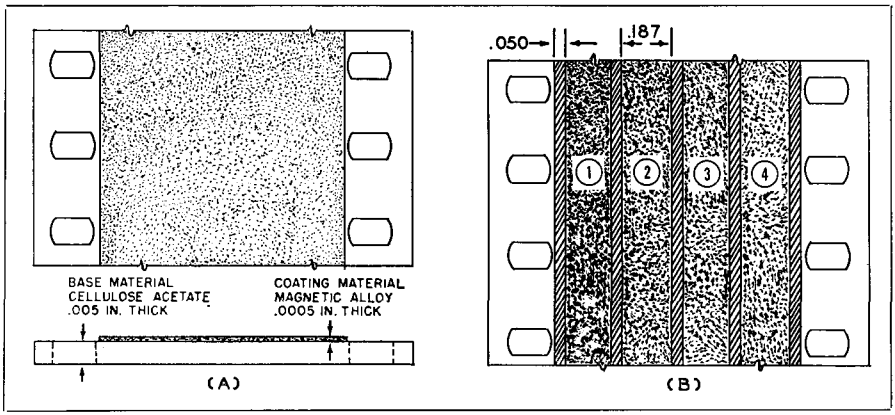

Fig. 3-13. (A) 35 mm. magnetic recording film. (B) Four-channel 35 mm. sound system.

erased, changed, or rearranged as many times as needed. When a satisfactory composition is made, all of the tracks are blended together in the re-recording process. By this process, the main record is re-recorded only once, thus minimizing noise and distortion.

5. For some types of work the film spools can be interchanged and the film can be run through again, thus eliminating rewinding, and doubling the recording time without the need for extra heads or other apparatus. A binaural system has been made in which channels 1 and 3 are used with the film running in one direction; and channels 2 and 4 are picked up when the film is run in the reverse direction.

6. By using narrower tracks, 8, 16, and even more channels can be accommodated.

The amplifier equipment needed for magnetic recording is conventional in most respects. Ordinary sound-on-film amplifiers can be modified readily for magnetic sound. Fig. 3-14A is a block diagram of a typical recording system. Pre-equalization is used for the high frequency end of the spectrum to com-

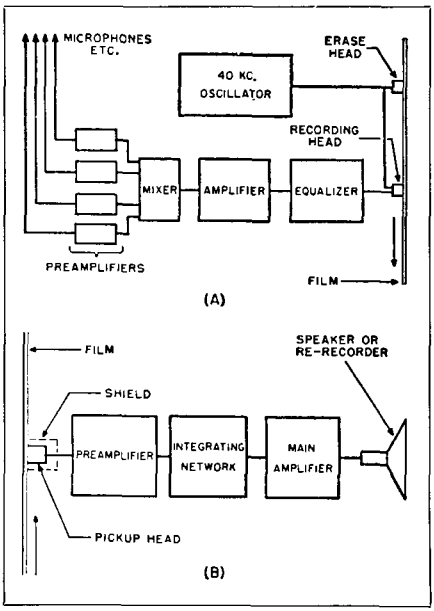

Fig. 3-14. (A) Recording system, and (B) the playback system.

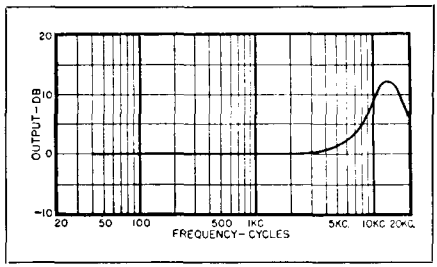

Fig. 3-15. Response of recording equalizer.

pensate for slit-loss in the recording head and for the inefficiency of short magnets in the record medium. The extent of these losses is indicated by the response curve of Fig. 3-15. Except for the boost at high frequencies the recorded flux is proportional to the input voltage of the system. This may be expressed by

$$\phi r = K_1 V_{in}$$

where ϕr is the recorded flux,

K_1 is a constant of proportionality,

V_{in} is the input voltage to be recorded.

In playback, the voltage generated by the head is proportional to the rate of change of flux, so that

$$V_{out} = K_2 \frac{d\phi r}{dt} = K_1 K_2 \frac{dV_{in}}{dt}$$

(K_2 a constant).

This equation indicates that the playback voltage is proportional to the derivative of the original signal, which not only causes a phase shift, but also gives a rising frequency characteristic. For proper reproduction an integrating network is necessary. It is advantageous to place this integrating network in a later stage of the voltage amplifier where it will also reduce tube noise. The playback system is diagrammed in the form of a block diagram in Fig. 3-14B.

Operation

Magnetic film recorders may be used in the same way as optical recorders. A recorder using synchronous motor drive is illustrated in Fig. 3-16. The sound camera and the picture camera are brought up to speed, and reference marks for synchronization made by

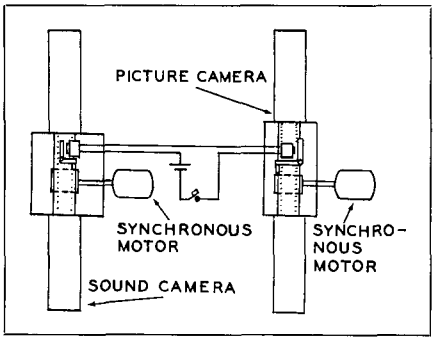

Fig. 3-16. Synchronization of sound and picture cameras.

clapping boards together in the usual manner. The recorded noise is as sharply defined on the magnetic track as it is on an optical one; naturally it cannot be seen, but it can be located easily by exploring with a pickup head in the editing machine.

A synchronizing system as in Fig. 3-16 may be convenient. A pair of relays are mounted, one in the motion picture camera, the other in the sound camera. Energizing these relays puts a scratch or a dab of paint on each of the films. These marks are later used for synchronization or for reference. Since the magnetic film is driven at a standard speed of 90 feet per minute, it will fit directly into editing, re-recording, and printing machines, these being provided with magnetic pickup heads.

Over-all response of the experimental system is given in Fig. 3-17. The frequency characteristic is flat from 60 to 12,000 cycles within 3 db. Intermodulation distortion was measured by recording a combined 100 cycle and 7000 cycle signal, the 7000 cycle component being 12 db. below the 100 cycle tone. Wave analyzer measurements showed a total intermodulation distortion of 4% at normal recording levels. Variation of intermodulation distortion with recording level is given in Fig. 3-18. Dynamic range measurements indicate that a maximum signal to noise ratio of about 45 db. is attained.

A 35 mm. magnetic sound recorder, which has a number of novel and desirable features for motion picture work, has been developed. The system can be used as an alternative to present

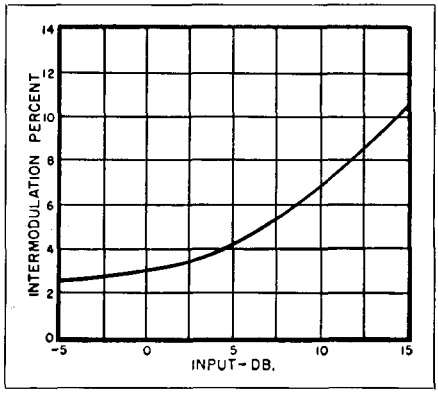

Fig. 3-18. Intermodulation distortion vs. recording level.

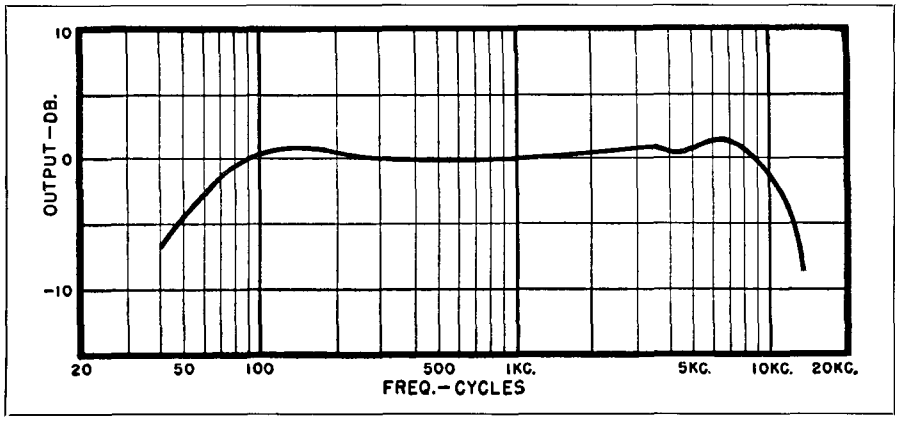

Fig. 3-17. Over-all frequency response of 35 mm. magnetic recording system.

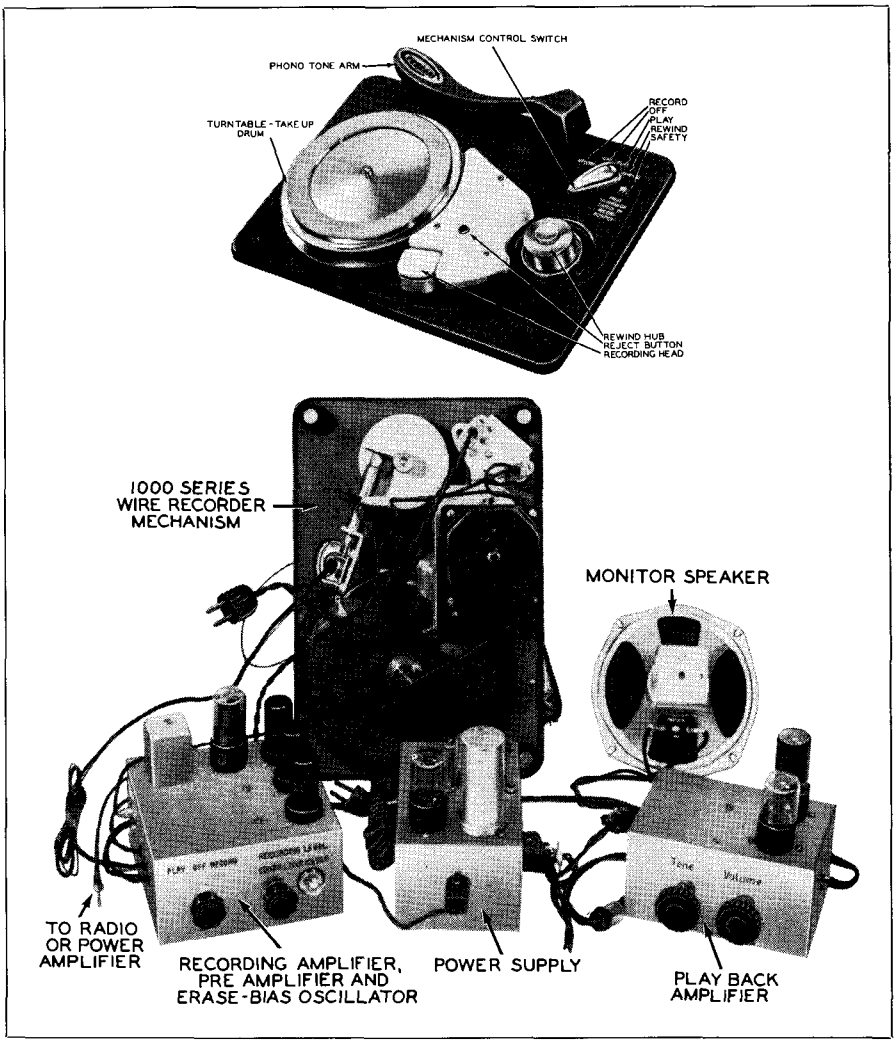

Fig. 3-19. Essential Components of a Wire Recorder. Courtesy Crescent Industries.

photographic methods, and should be more flexible and economical. Laboratory measurements indicate that further improvements are probable.

Magnetic Recording on Tape, Disc and Wire

Fundamentally the recording on paper tape, paper disc, or wire is the same. The main difference lies in the mechanical means for driving the material to be magnetically recorded, in the means for playing back the sound, and in the employment of different techniques for recording the sound on the material.

Magnetic materials are drawn past a recording head. As the material passes the head, it becomes and remains magnetized. The amount of magnetism remaining in the material at each instant is governed by the signal impressed upon the recording head. In playing back, the magnetic material is drawn past a playback head. In many systems the recording and playback

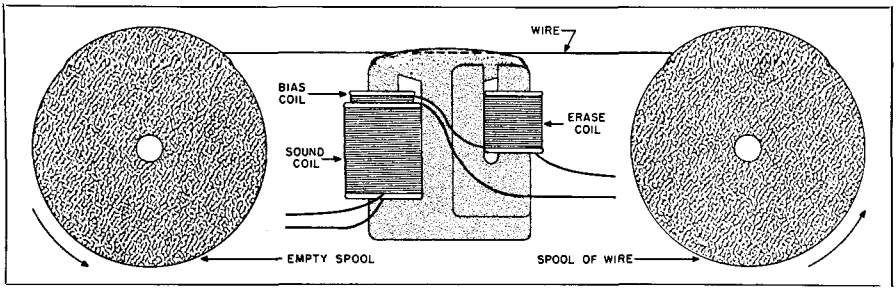

Fig. 3-20. Combined record-playback head assembly for wire.

heads are the same. Fig. 3-20. The magnetization, which is variable, exists in the material and induces a corresponding voltage in the coil of the playback head. The functions of recording and playback are incorporated into a single record-playback head in most magnetic recorders.

It is a simple matter to erase any signal from any of the magnetic materials now employed. A strong field is set up within the erase head and this is impressed upon the material. This erases the old signal and makes the material ready to receive new signals. Basically, the tape, disc, and wire recorders consist of the magnetic material, the record-reproduce head and the erase head. In addition, of course, are the various types of driving systems used to draw the material through or over the head and the conventional amplifying and reproducing systems.

A supersonic oscillator, usually from approximately 30 to 60 kc., serves the double purpose of providing high frequency for both the demagnetizing head and for the recording head. The material is first run through the erase head. Here is it demagnetized and made ready for the recording head. The application of a supersonic signal to the recording head provides a bias. This is essential to overcome the nonlinearity

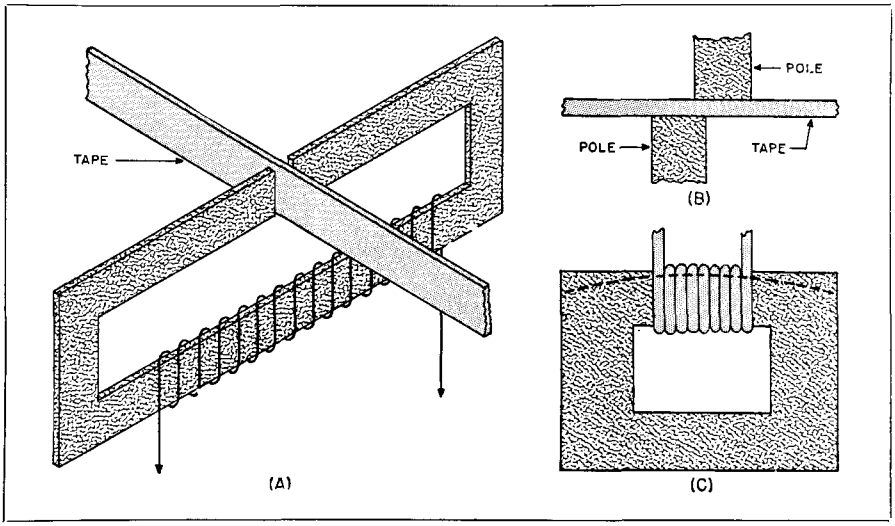

Fig. 3-21. Simplified diagrams of (A) record-reproduce head for transverse recording on tape, (B) offset, thick pole pieces which improve characteristics of head shown in (A), and (C) closed type wire record-reproduce head.

of the normal magnetization curve of the magnetic materials. Fundamentally these materials are the same. They differ only in their type of construction. These materials may be in the form of steel tape, wire, magnetized coating upon paper tape, or upon paper discs, or in fact the magnetized material may be coated or impregnated into various alloys.

Insofar as quality of recording-reproduction is concerned, we find that speed is an all-important factor. The higher the speed, generally, the greater will be the fidelity. This will be completely explained in following chapters.

The development of record-erase heads has gone on at a rapid pace. Beginning from cumbersome units often measuring four inches square, new tiny heads have been developed which are no larger than a regular two cent postage stamp. The magnetic field in these new units has been concentrated and condensed to a very small area. The slot, for example, in the case of a wire recorder head, often is not more than one-thousandth of an inch in width. The traveling wire passes through this slot and encounters the magnetic field set up by the head as in Fig. 3-20.

Three basic types of magnetic recording heads are illustrated in Fig. 3-21. In magnetic recording, frequency response, noise level, and signal amplitude are affected by the type of magnetic material used. At fixed speed and at lower frequencies, the retentivity, which is the measure of residual flux density, will determine the magnitude of the output voltage from the reproducing head. Generally speaking, the lower or bass notes must be suppressed when using magnetic recording. This too applies to the cutting of slow speed electrical transcriptions by means of lateral styli on discs.

Frequency response from the above systems, as mentioned, depends largely upon the speed of the magnetized material as it passes the head. A frequency response of between 60 and 8000 cycles per second can usually be obtained from most of the "home" machines. Recording time depends upon the material used and upon the physical size of the containers for the magnetized material. For example, the average wire recorder has enough stainless steel wire to operate for approximately 66 minutes at a speed of 2 feet per second.

Some of the paper tape machines run three or four hours. They employ regular 8 or 16 millimeter reels such as are used in movie projectors. They require more physical area for their mounting and are therefore a bit more cumbersome than the more compact disc or wire types.

CHAPTER 4

Lateral Disc Recording

The theory and practice of the engraving (cutting) of instantaneous recording discs with magnetic and crystal cutters.

● In order to reproduce a record properly (with a flat characteristic) it is necessary to know first how it is cut (recorded). The device that cuts the wiggle, or modulates the record groove, known as the cutter-head, puts a large amplitude (or wiggle) on the record for bass tones, and a small wiggle for treble tones. That is to say, if an instrument like the piano had the same sound intensity for all notes on the keyboard and then someone were to start with the lowest bass note and play up the scale to the highest note on the piano, the cutter-head would cut a wiggle (or amplitude) in the record groove as illustrated in Fig. 4-1.

This could be plotted like a stock market report in terms of amplitude vs. pitch or frequency. Fig. 4-2.

From the graph it can be seen that the amplitude of the cut on the record is less by one-half for each octave up the scale or each time the frequency is doubled, the amplitude on the record is reduced to one-half.

The immediate reaction is to question why a record is cut this way. It dates back to the start of record making. In olden times, a cutting needle was attached to a small diaphragm at the end of a horn. The artist performed in front of the horn and the record was cut in this fashion. The record had an amplitude characteristic as plotted on the graph in Fig. 4-2, and that was the nature of the brute. It was called an acoustic recording (Chapter 2). A record so cut, when played on the old acoustic system, (consisting of a needle attached to a diaphragm and coupled to a horn) reproduced the record with a flat characteristic, with bad limitations, and again that was the nature of the brute. Thus, record cutting was started with this characteristic and it was continued in later years when magnetic cutters became available for making

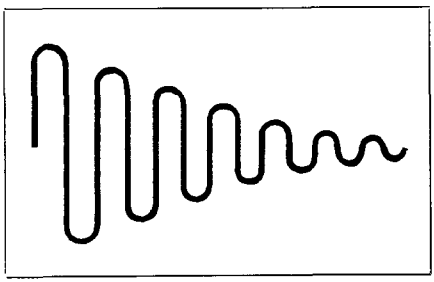

Fig. 4-1.

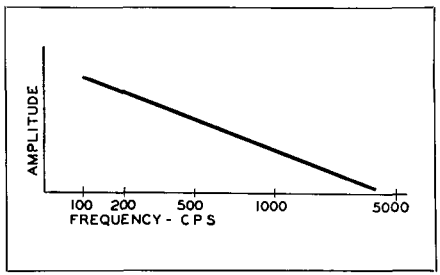

Fig. 4-2.

electrically recorded records. Again it was the nature of the magnetic device to cut records with an amplitude which was decreased by one-half every time the frequency was doubled. Fortunately for all concerned, a record so recorded and then played back with a magnetic type reproducer, would reproduce with a flat characteristic.

There is a name for this cutting characteristic and if we could learn to use it properly, it would save a lot of time in our discussion. The recording characteristic as shown in Fig. 4-2, is called "constant velocity." You may wonder about the name. From elementary physics, velocity is equal to amplitude multiplied by frequency. In this case, the two quantities which vary are frequency and amplitude, but by definition, the velocity must remain constant. That is, the product of amplitude and frequency, must always equal the same number. For example, let us assume the velocity of the needle (stylus) to be 3″ per second, or about a sixth of a mile per hour, if that is more familiar to you. The question is; "What is the amplitude at 1,000 cycles?" Substituting various frequencies in our formula, frequency X amplitude = velocity:

1,000 cycles X .003″ amplitude = 3″ per second stylus velocity

2,000 cycles X .0015″ amplitude = 3″ per second stylus velocity

4,000 cycles X .00075″ amplitude = 3″ per second stylus velocity

8,000 cycles X .00037″ amplitude = 3″ per second stylus velocity

Just as a matter of interest, let us go in the other direction towards the bass frequencies. For one-half of 1,000 cycles, we should get twice the amplitude of the cut on the record.

500 cycles X .006″ amplitude = 3″ per second stylus velocity. For one-half of 500 cycles, we should get again twice the amplitude.

250 cycles X .012″ amplitude = 3″ per second stylus velocity

125 cycles X .024″ amplitude = 3″ per second stylus velocity

67½ cycles X .048″ amplitude = 3″ per second stylus velocity

We will draw some important conclusions from this data. Now you know what is meant by constant velocity recording for you have seen the velocity held constant and the amplitude doubled each time the frequency was cut in half.

With equal intensity sounds from bass to treble, acoustic cutters as well as modern magnetic cutting heads cut a constant velocity record. Acoustic and modern magnetic type reproducers play back a constant velocity cut with a flat charactertistic. We are looking for a flat characteristic and the story could end here if it were not for a few troubles encountered in constant velocity recording.

To facilitate keeping the picture in mind, we can keep score in the following fashion. The frequency response *as cut* on the record is shown on the left (Fig. 4-3) and the same record as reproduced (voltage output from the *reproducer*) is shown on the right.

In order to have a reasonable playing time on the record, the grooves are spaced about 100 to the inch. (This

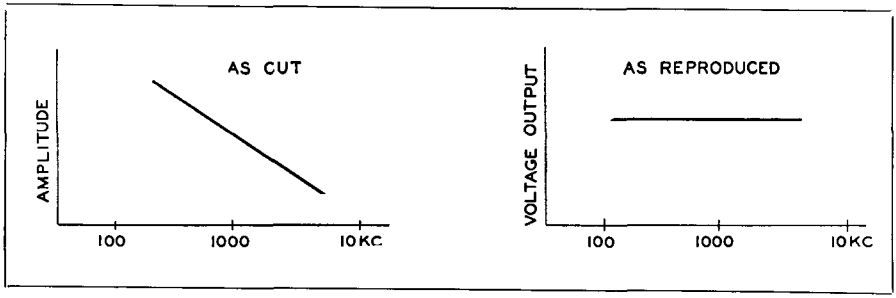

Fig. 4-3.

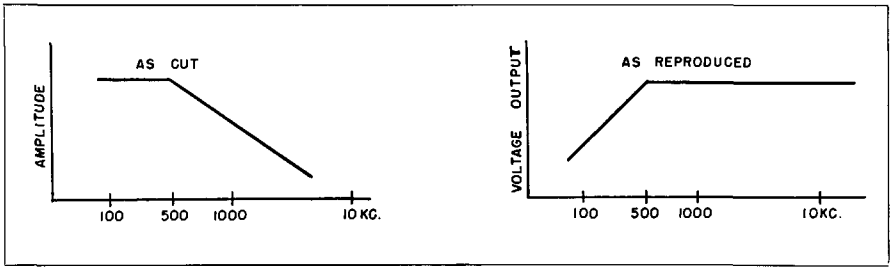

Fig. 4-4.

varies from 96 to 275, depending on the type of record.) Now, with 100 grooves to the inch, this means that the groove centers are 1/100th of an inch or .010 inch apart. From this it can be seen that the amplitude of the wiggle of the groove cannot exceed ½ of .010″, or .005″ in side-ways displacement, or there will be an "over-cut". That is, if this tone persists through more than one revolution of the record, the two groove centers will meet one another with the result that the playback needle is confused as to which path to take. If the amplitude of the cut on the record cannot exceed .005″ to each side, there is a total distance of .010″ from side to side as the cutting needle wiggles back and forth. Thus, approximately .010″ is allowable on the record.

Referring back to the data on amplitude at various frequencies, we see that it is necessary to limit the amplitude below 500 cycles, if we are to have any safety factor from overcut. At 250 cycles, the amplitude is .012, which won't fit in our grooves. As the frequency is lowered in tone, the situation grows more serious.

In early days of recording with acoustic devices, this was not a serious problem because the system was not responsive to lower tones, as you will remember in listening to old-time phonographs. With modern equipment, it is a different story; the cutter-head must be designed so that below 500 cycles, it levels off and cuts at the same amplitude (constant amplitude) for all frequencies below 500 cycles. The effect on the magnetic reproducer is to play back constant velocity with a flat characteristic, as you know, but now for constant amplitude, the output of the reproducer is cut in half for each octave below 500 cycles, or, as the frequency is cut in half, (250 cycles for example), the output of the magnetic reproducer is cut in half. Again, at 125 cycles, the output is cut in half, etc. To be technical, we say we lose 6 db. (decibel, a measurement of sound intensity) per octave below 500 cycles (Fig. 4-4).

Another new word should make its appearance at this time. It is called "Cross-over." The frequency of cross-over is that at which constant amplitude recording crosses over to constant velocity recording. In this case it is 500 cycles. This type of recording, constant amplitude to a cross-over frequency and then constant velocity above cross-over, is known as a "flat cut record;" however, the output from the pickup on playback, as explained previously, is far from flat. The playback curve shown in Fig. 4-4 is the response of the magnetic pickup, if connected

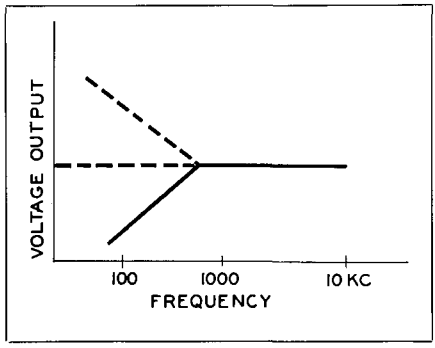

Fig. 4-5.

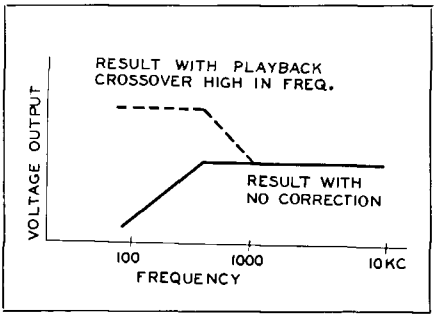

Fig. 4-6.

directly into an amplifier without a corrective network. At some place in the playback circuit, the output of the magnetic pickup must be sloped upward at a rate of 6 db. per octave below the cross-over as illustrated by the dotted line in Fig. 4-5.

The result of the insertion of the corrective network in the circuit will have the effect of flattening the response curve from the "flat cut record." The network is usually a simple resistance voltage divider and condenser network. It is very important that the components of the network are such as to start the upward corrective slope at the recorded cross-over frequency. By starting the upward slope high in frequency, a "barrel" sound or "boomy" quality will result as shown in Fig. 4-6.

If the slope upward is started by the corrective network, below the recorded cross-over frequency of the record, Fig. 4-7, the reproduction will sound "thin," as the bass frequency will not be fully corrected.

One should conclude from this, that it is important to have the corrective network *correct*. The fact that commercial recording companies have not established a standard cross-over frequency, is very discouraging to the engineer, as the proper balance between high frequency and low frequency is only obtained when the recorded and playback crossover frequencies are the same. Usually, 500 cycles will suffice for the playback of most records.

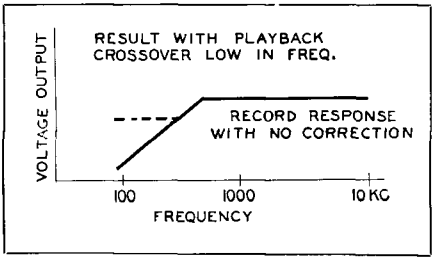

Fig. 4-7.

For some years, the industry used this recording characteristic of a constant amplitude from the bass notes up to a cross-over frequency of about 500 cycles, and from there up in frequency constant velocity. However, with the development of recording equipment, speakers, amplifiers, and pickups capable of reproducing higher frequencies, the surface noise of the record became more evident and objectionable. The reason for this is shown graphically in Fig. 4-8.

Here it will be noted that the noise is somewhat constant in amplitude, except for rumble and vibration in the low frequency, usually present to some extent in playback and recording equipment. With a recording characteristic of constant velocity, in which you will remember the amplitude becomes less by one-half for each octave higher in frequency, it can be seen from the graph that the noise amplitude and that of the recorded program soon become equal in the higher frequencies. At still higher frequencies, the noise becomes greater in amplitude than the recorded program, making it useless to try to reproduce. The amount of noise on a record is dependent upon the material used and whether or not an abrasive is present in the processed record to make it more wear-resistant to the needle.

In broadcast transcriptions, the situation has been somewhat remedied by the use of orthocoustic recording. In this method of recording, the frequency range above the crossover point of 500 cycles, is sloped upward to prevent the amplitude of the upper frequencies from sinking to the level of the noise. This is shown graphically in Fig. 4-9.

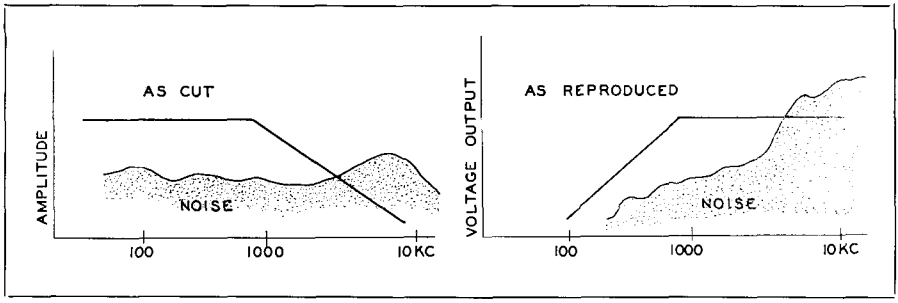

Fig. 4-8.

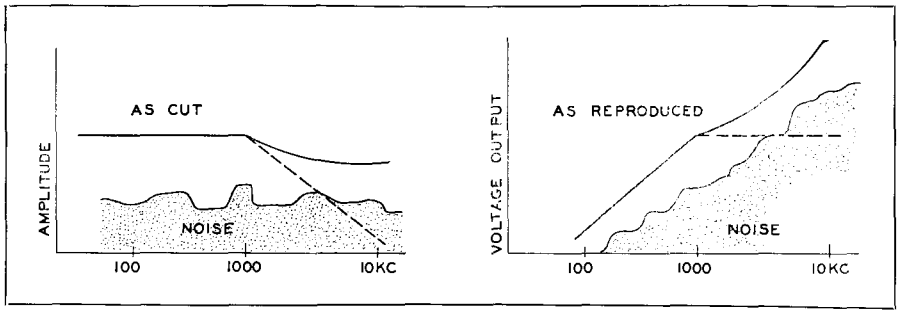

Fig. 4-9.

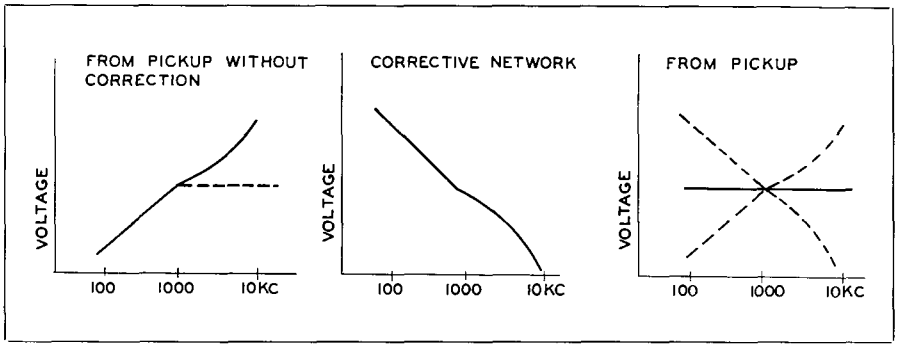

Fig. 4-10.

The National Association of Broadcasters established recording standards (NAB Standards) in which the recording characteristic at 5,000 cycles is 10.2 db. above constant velocity recording level at 5,000 cycles, and at 10,000 cycles it is 16 db. above the constant velocity level at 10,000 cycles.

As shown in the graph, the playback will have a rising characteristic above the cross-over frequency of 16 db. at 10 kc. It should be noted that the recorded program material remains above the noise throughout the high frequency range.

In order to properly reproduce the orthocoustic type of recording, it is necessary to put an electrical network in the output of the pickup, which is the reverse of the recording characteristic. If the output of the pickup is sloped off in the high frequencies at the same rate that the recorded characteristic is sloped upward, the result will be a flat playback characteristic, and yet have greater discrimination against the noise. Fig. 4-10.

This type of recording has influenced commercial recording companies, and even with the lack of perfect standards, their product shows tendencies in the direction of the standards as set on the broadcast transcription.

Reference: Walter Carruthers, Don Lee Network.

Magnetic Cutters

There are two widely used types of cutters for the engraving of sound on instantaneous discs, the magnetic and crystal.

The capabilities of each as regards frequency range, sensitivity and other refinements depend largely upon the type of construction and, equally important, upon the finished workmanship of the particular unit. There are expensive professional magnetic cutters for professional use as well as the inexpensive units designed primarily for home recording. It is an established fact, however, that many inexpensive magnetic and crystal cutters are quite capable of high fidelity cutting provided that the associated equipment is carefully designed and that particular attention is given to the mechanical construction, mounting, and circuits employed in using such cutters.

Construction varies with different makes and models but, like a motor car, accomplish similar results. Space does not permit a discussion of each of many excellent cutters, hence our discussion will be limited to representative types for home and professional applications.

Function

Most magnetic cutters are high quality, wide-range recording units designed especially for instantaneous recording on nitrate, acetate and similar blanks. Ruggedness, stability, and high sensitivity make these units ideally suited for use with *home recording* equipment.

Magnetic cutters are low impedance devices and, as such, can be connected to the voice-coil side of the output transformer. The fact that switching is performed on the low-voltage side of the output transformer simplifies circuit design and makes possible considerable economy in equipment costs.

Structure

The *Shure* Model 96 (Fig. 4-11) transducer (cutter) has a balanced-armature, nonpivotal moving system which does not depend for its alignment or centering upon damping material. The high permeability elastic armature member, rigidly clamped to the frame, maintains the whole moving system in exact alignment with the pole pieces, (Fig. 4-12). This permits the use of a highly stable damping material solely as a dissipative medium instead of using it also to perform a centering function. The elastic armature and compliant supporting member, damping material, and needle chuck, constitute a mechanical wave network which provides unusually high sensitivity and smoothness of frequency response.

Magnetic cutters are exceptionally rugged and stable, and will give long and satisfactory service under all cli-

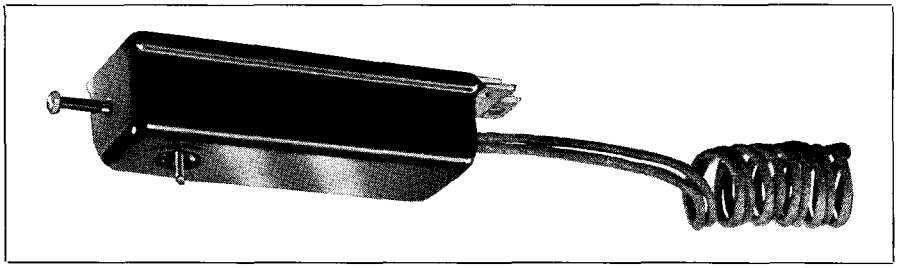

Fig. 4-11. Shure Bros. magnetic cutter. (Courtesy Shure Bros.)

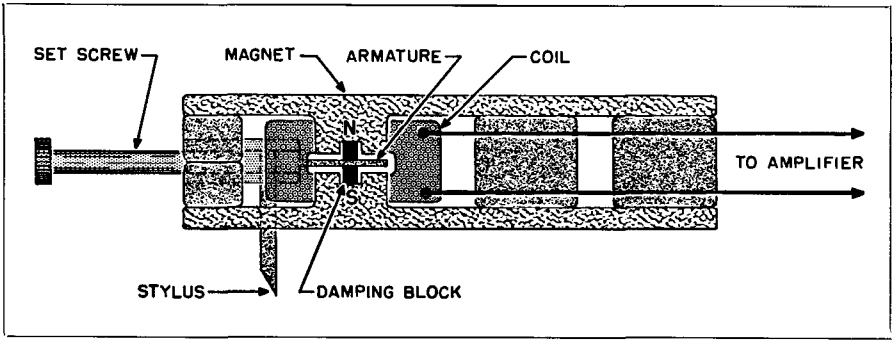

Fig. 4-12. Details of assembly and structure of Shure Model 96 magnetic cutter.

matic conditions. Their cutting level and response characteristics are independent of temperature over a wide temperature range.

The rigidly clamped armature support will maintain its alignment indefinitely in both the rotation and axial modes, which was not the case with earlier mechanisms whose alignment depended on rubber bearings and damping blocks.

Electrical overloads will not readily damage the cutter or alter its characteristics.

Mounting

The magnetic cutter should be mounted in the recording arm or feed carriage so as to have complete vertical freedom, but no horizontal motion relative to the arm. Experience has shown that there are advantages in pivoting the cutter as close to the surface of the record as possible. The mounting, or arm, should preferably have means for adjusting the cutter pressure and the cutter angle. Under ordinary circumstances, the cutter will perform most satisfactorily if held parallel to the surface of the record; however, slight adjustments may be desirable with a given recording material or a given stylus. The pressure at the stylus point should be independent of the up-and-down motion of the cutter to insure groove uniformity on recording blanks which may be slightly warped.

Motorboard Vibration

It is particularly important in recording to reduce *rumble* and *feedback* to a minimum, inasmuch as records are often produced with insufficient volume thereby emphasizing background noises. Vibrations of the recording arm relative to the turntable will be recorded on the record and will appear during playback. The intermodulation of these vibrations with the recorded speech or music may have an undesirable effect on the quality of the record. The *motorboard* assembly should, therefore, be free of any appreciable vibration.

In many instances, a motorboard will be less subject to vibrations if it is tightly clamped to the recording cabinet. Elastic mounting of the motorboard (on springs or by similar means) may, under certain conditions, emphasize motorboard vibration and stylus chatter.

Then again, motorboard vibration may reside in an unbalanced driving motor, in idler wheels, or in turntable rims which in some cases are not perfectly round.

Severe motorboard vibration can sometimes be completely corrected only by elimination of the above causes.

Cabinet Vibration

Since no cabinet is perfectly rigid, the speaker vibrations will carry through to the motorboard. Two sep-

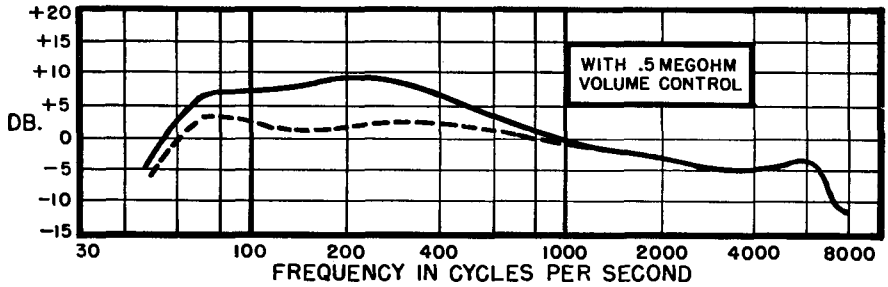

Fig. 4-13. Solid curve shows response of conventional crystal pickup when used without correcting filter. Dashed curve shows response using circuit of Fig. 4-14.

arate effects may result from this vibration:

1. During recording, sound originating at the monitoring loudspeaker may cause vibration of the motorboard, thus changing the quality of the recorded signal.

2. During playback, cabinet vibration may be responsible for mechanical feedback between the playback pickup and the loudspeaker.

Both effects will be small in cabinets which are solidly constructed. In some instances, extensive experimental work may be required to eliminate the effects of cabinet vibration. Usually it is advisable to mount the loudspeaker elastically. In severe cases of mechanical feedback the motorboard may also be mounted on elastic pads, although this should be done with care to avoid the possibility of motorboard vibration and rumble. Often, an excessive low-frequency response of the playback pickup causes feedback and emphasizes motorboard rumble. Conventional crystal pickups have a rise at low frequencies (Fig. 4-13) when played on a standard test record (such as the *Audiotone* No. 78-1), and hence in a great majority of cases it is desirable to use these pickups with a simple correcting network, Fig. 4-14.

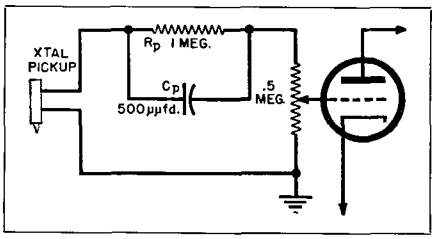

Fig. 4-14. Simple filter network that is often used for bass attenuation.

Home Recording Styli

Styli made of steel, styli tipped with special alloys, diamond or sapphire-tipped styli, may be used with the magnetic cutter. The life of the stylus depends upon the cutting properties of the record material. (See Chapter 7.) Because they are fragile and relatively expensive, sapphire-tipped styli are recommended only for the highest quality professional work, and generally are not used in the home. On nitrate or acetate blanks, a good quality steel stylus will usually retain satisfactory cutting qualities for about one-half hour of recording time. The so-called "short" styli having an over-all length of ⅝″ and a diameter of .060″ to .070″ are recommended. The stylus should be fastened in the needle hole of the cutter with the flattened part of the shank toward the stylus screw. In the cutter being discussed the needle hole is properly designed to permit secure fastening of the stylus without the necessity of applying excessive torque to the stylus set screw.

The correct stylus pressure must be determined by experiment, for it depends on the type and sharpness of the stylus, the method of pivoting the cutter, and upon the type, age, and temperature of the record blank.

The stylus pressure should be adjusted so that the width of the groove

is .005 to .006 inches. This may be checked easily by observing the cut through an eyepiece having a magnifying power of approximately 10. The width of the unmodulated groove (in home recordings) should be approximately the same as the width of the "land" (or space between grooves) when viewed by diffused lighting. After the groove width has been properly adjusted, the required stylus pressure may be measured by means of a spring scale.

The following figures indicate the range of pressures which have been encountered on relatively inexpensive record blanks at a temperature of 75° F.

Type of Record	Stylus Pressure
1. Paper-Base Coated Record, Manufacturer A (hardest of the three)	1½ oz.
2. Metal-Base Coated Record, Manufacturer B (medium hardness)	1 oz.
3. Paper-base Coated Record, Manufacturer C (softest of the three)	⅞ oz.

The correct width and depth of the groove is of considerable importance. A cut which is too shallow may cause the playback pickup to leave the groove during loud passages. A cut which is too deep may cause adjacent grooves to run into each other causing "overcutting" and "echoes," and may increase the difficulty of thread clearance.

Recording Level

Experience has shown that for most satisfactory results the groove modulation in instantaneous recording blanks should be somewhat less than that in commercial pressings. The soft coating of instantaneous recording blanks usually cannot withstand severe overmodulation without producing distortion and echoes. This is particularly true with equipment recording at 110 grooves per inch. Good home recordings are obtained with a level approximately 4 to 8 db. lower than that of commercial pressings. To obtain a groove modulation having a level approximately 6 db. below commercial recordings (as exemplified by the *Audiotone* No. 78-1 test record), if measured with a sensitive rectifier type meter connected across the cutter should be approximately $\sqrt{Z/5}$ volts where Z is the 400 cycle impedance of the cutter.

The following table lists the suggested voltage peaks across cutters (such as the Model 96) of various impedances, as measured by a medium-speed volume indicator connected across the cutter terminals:

DC Resistance	400 Cycle Impedance	Voltage Peaks
½ ohm	1.2 ohms	½ volt
1 ohm	2.5 ohms	.7 volt
2 ohms	5.0 ohms	1 volt
3 ohms	7.5 ohms	1.2 volts
4 ohms	10.0 ohms	1.4 volts
5 ohms	12.0 ohms	1.6 volts
6 ohms	15.0 ohms	1.7 volts
8 ohms	20.0 ohms	2 volts
12 ohms	30.0 ohms	2¼ volts

The values in this table may serve as a rough guide for settings of recording level indicators or in conjunction with the table in Chapter 8 "The Decibel."

Impedance Matching

Considerable experience in the application of magnetic cutters to commercial home recording equipment has emphasized the fact that the cutter impedance must be correctly related to the output impedance of the audio system if good quality reproduction is to be obtained. This is particularly true with pentode type output tubes. The correct impedance relationship can be obtained by revision of the output transformer secondary winding, or by selection of a cutter of required impedance. Cutters of the following impedance values are generally available:

DC Resistance	400 Cycle Impedance
½ ohm	1.2 ohms
1 ohm	2.5 ohms
2 ohms	5.0 ohms

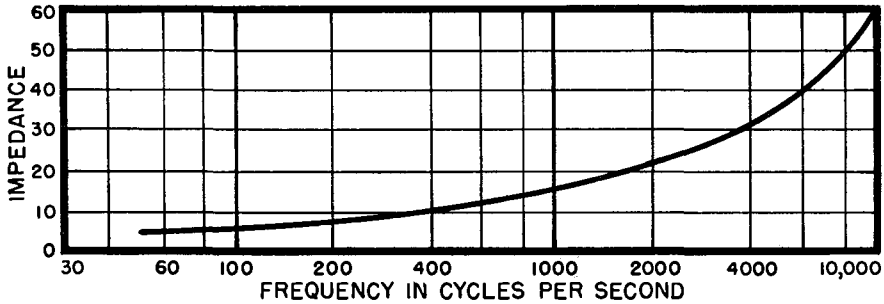

Fig. 4-15. Curve shows actual relationship between cutter impedance and frequency.

DC Resistance	400 Cycle Impedance
3 ohms	7.5 ohms
4 ohms	10.0 ohms
5 ohms	12.5 ohms
6 ohms	15.0 ohms
8 ohms	20.0 ohms
12 ohms	30.0 ohms

The total impedance reflected into the output stage by the cutter and the associated circuit components (such as the monitoring loudspeaker, level indicator and dummy loads, if any) should be equal to the optimum load value recommended by the tube manufacturer. This impedance may be calculated approximately with the aid of the values given in the paragraphs below; however, it is suggested that an impedance bridge be used for final determination of the total load imposed upon the output stage. Inasmuch as the load impedance will, to a certain extent, vary with frequency, it is suggested that matching be done at 400 cycles per second, which is the frequency of probable power peaks of speech and music.

Cutter Impedance

The impedance of the cutter is a *function of frequency* because of the inductance and iron losses in the magnetic circuit. The impedance increases from the nominal d.c. value of the cutter resistance in accordance with Fig. 4-15. Thus, a cutter having a d.c. resistance of 4 ohms will have an impedance of approximately 10 ohms at 400 cycles per second, 15 ohms at 1000 cycles per second, 43 ohms at 7000 cycles per second and 60 ohms at 10,000 cycles per second.

Total Impedance of Cutter and Auxiliary Circuits

In connecting the cutter to pentode output tubes, optimum loading conditions combined with good recorded response may be obtained by connecting the cutter in parallel with a resistance having a value of ½ to 2 times the 400 cycle impedance of the cutter. The effect of the parallel resistance on recorded frequency response is illustrated in Fig. 4-16. After a suitable response

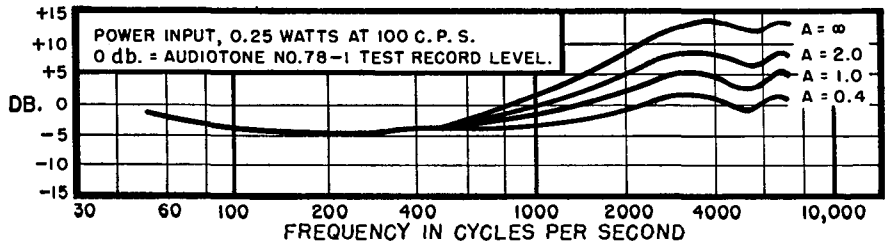

Fig. 4-16. Effect of resistance across cutter in pentode circuits. The ratio of the parallel resistance to the cutter impedance is represented by A.

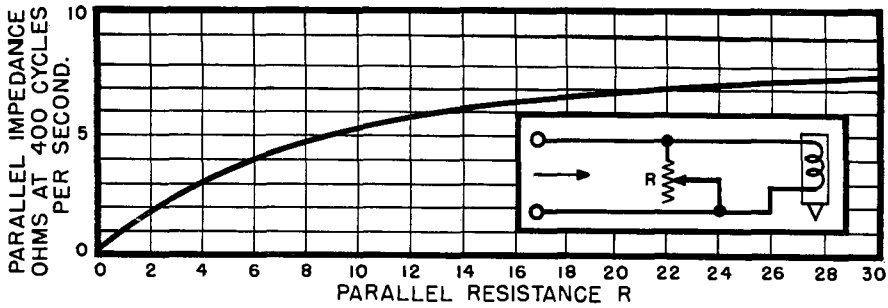

Fig. 4-17. Chart used to determine parallel 400 cycle impedance.

curve has been determined, the 400 cycle impedance of the parallel combination of cutter and resistor may be found from Fig. 4-17 for a 9611-B4 (10 ohms at 400 cps) cutter; however, it may be used for cutters of different impedance by multiplying all values given on the curve by $Z/10$ where Z is the 400 cycle impedance of the given cutter.

For the purpose of approximate calculations in computing the series and parallel impedance of the load, it is permissible to treat the 400 cycle cutter impedance as if it were a d.c. resistance, inasmuch as the "Q" of the cutter is 0.8 at that frequency. For example, a 9611-B4 (4 ohms d.c., 10 ohms at 400 cycles) cutter is connected in parallel with a 15 ohm resistor. The total parallel impedance may be found from Fig. 4-17 to be equal to 6.3 ohms or it may be calculated approximately as 10x15/(10+15) = 6 ohms. The ratio A in this instance is 15/10 = 1.5. If this parallel combination is now connected in series with a 3 ohm monitoring loudspeaker voice coil, the total 400 cycle impedance of the load will be 6+3 = 9 ohms.

Again, if, for the purpose of monitoring, a 6 ohm speaker voice coil is connected in parallel with a 1 ohm resistor, and this parallel combination is connected in series with another parallel combination consisting of a cutter (10 ohms at 400 cycles) and a 10 ohm resistor, the total load impedance will be

$$\frac{1 \times 6}{1 + 6} + \frac{10 \times 10}{10 + 10} = 5.86 \text{ ohms}$$

This series-parallel circuit then can be connected into the 6 ohm winding of the output transformer.

In general, level indicating devices consume a negligible amount of power. However, in the case of relatively insensitive indicators such as pilot lamps, the indicator impedance should be considered as part of the total load of the circuit.

Magnetic Cutters For Professional Applications

High fidelity recording heads, such as the *RCA* MI-4887, are high quality magnetic units precision built and ac-

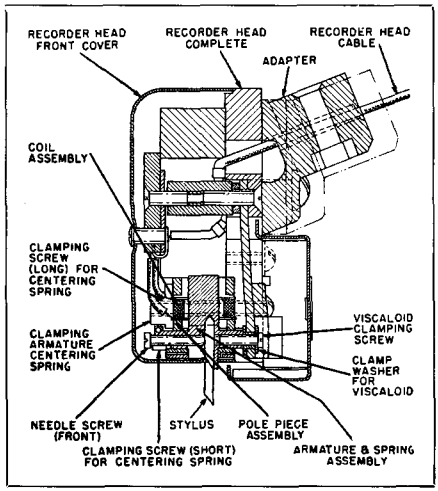

Fig. 4-18. Precision assembly of high quality magnetic cutter (RCA MI-4887).

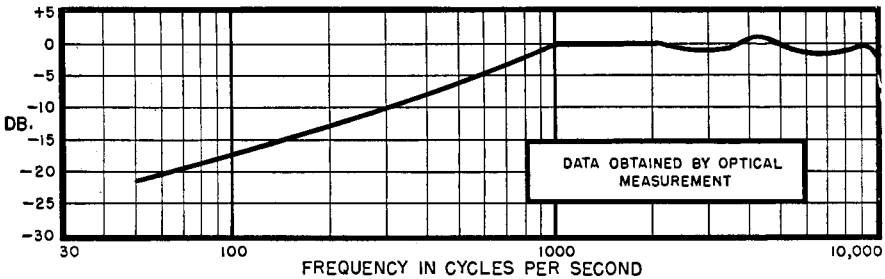

Fig. 4-19. Frequency response characteristics of cutter shown in Fig. 4-18.

curately adjusted. They are primarily intended for use on composition coated discs, or can be used on wax, since they do not depend on the record material for damping. The unit illustrated is held within close frequency limits and does not depart from an ideal response curve more than two decibels between 50 and 10,000 cycles per second. Heads are matched for sensitivity within two decibels at 1000 cycles per second. In physical construction, it represents a bandpass mechanical network terminated in a dry mechanical resistance material. The armature is of the balanced type and is centered by means of an adjustable tempered steel spring. The armature is supported on rugged knife-edge bearings. Pole pieces are made of nicaloi (Fig. 4-18).

Recorders using these professional heads should be operated in a temperature controlled room for most uniform results. Frequency response and sensitivity are standard at 72 degrees F. and vary slightly with temperature. Between 65 degrees F. and 80 degrees F. the cutters will remain fairly close to normal characteristics, the variations not exceeding 3 db. from the response at 72 degrees F. Performance data at the time of manufacture is obtained by scientific optical means, thus excluding errors which might arise from commercial tolerances in cutting styli and disc materials.

A typical response frequency characteristic of the head is shown in Fig. 4-19 and is based upon measurement of the stylus tip motion for constant input. It does not include transfer or needle losses which occur in both recording and reproduction and which are rather severe at high frequencies (at low record surface speeds).

Distortion in records made with this head is extremely low. If distortion should be observed, it can usually be attributed to overmodulation which results in failure of the reproducer stylus to follow the groove. Such heads, when properly used, can consistently produce records equal in quality to the finest commercial transcriptions.

A compensator pack (Fig. 4-20) is provided to nullify the inductance of the

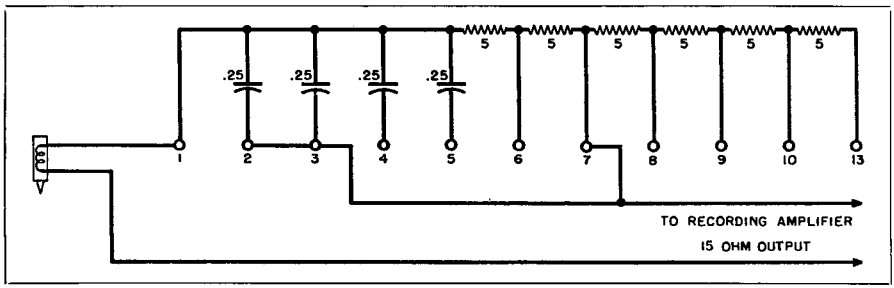

Fig. 4-20. Variable compensation for matching cutters and to nullify inductance.

head and present to the amplifier a nearly constant impedance. The recommended connections provide a resistance of 10 ohms in series with the cutting head. This resistance is bypassed with a 0.5 mfd. condenser. The only purpose in making the compensator adjustable is to permit obtaining identical sensitivity among heads when more than one is used. Critical operators may wish to compensate for manufacturing tolerances by slightly increasing the value of series resistance in the high sensitivity units and slightly reducing it on the low heads. This should be done in steps of not more than 2.5 ohms which is possible by series-parallel connections. See Fig. 4-20. In no case should the total resistance in series with the head be less than 7.5 ohms or the frequency response will be seriously affected. High frequency response can be altered by varying the value of the capacitor.

Standard Groove Dimensions

Generally speaking, the proper depth of groove can be determined by observing the groove width relative to the remaining land between the grooves. In the case of 96 lines per inch (a coarse cut) the land should be approximately two-thirds of the groove width. Or, in other words, forty percent land and sixty percent groove.

Many operators determine proper cut by "sight and feel" of the chip or thread cut from the disc. Others employ a micrometer to measure the thread removed from the blank. The recording of microgroove records presents special problems of groove dimensions which are discussed in detail in Chapters 6 and 7. Basically, the depth of the groove should be sufficient to insure proper seating of the reproducing stylus and care should be taken that the feed mechanism is adjusted sufficiently level so that the depth of cut remains substantially constant over the entire record.

Stylus Adjustment

The cutting stylus should be nearly vertical to the record. Some prefer a lagging angle two or three degrees off vertical, while others favor a leading or "digging in" angle of about two degrees off vertical. Laboratory tests have shown a slight lag or lead to be superior to an exactly vertical stylus in producing a highly polished groove. This applies to sapphire styli in particular.

Noise Test

When using professional recording heads, it is well to make surface noise tests and high frequency response measurements with all the styli which are on hand, selecting those that produce quiet, clean cuts. There should be a reasonable number of spare points available to prevent unnecessary use of worn styli. Noise tests from time to time will indicate the condition and degree of wear of the stylus. This can be accomplished by cutting unmodulated grooves with each stylus and measuring the relative noise output, using the high fidelity pickup and a volume indicator preceded by a 1000 cycle high pass filter. High frequency response measurements on styli can be made on one frequency, (for example, 8000 cps) and the relative reproduced output noted. For this and the noise measurements recording tests should be made as closely as possible at the same diameter on the disc. The results change rapidly with surface speed.

Determining Recording Level

It is impractical to make a plain statement of the correct recording level for any head. While sensitivity of similar heads does not vary more than 2 db., the correct level can be established only by experience and tests. There are no fixed boundaries for disc recording representing 100% modulation. At low frequencies, it is true that the groove spacing limits the amplitude. At higher frequencies, the wave slope is the limiting factor. This slope varies with applied voltage and with record surface speed.

The correct maximum recording level is governed by a number of factors; the

subject matter being recorded, the energy distribution with respect to the frequency, whether high frequency needle loss compensation is used, the record surface speed, the type of pick-up to be used, the type and length of recording stylus, the type of indicating meter used and its dynamic characteristics, whether peak or average reading is used, the accuracy of program monitoring, the uniformity of average program levels, whether limiting amplifiers are used, temperature of the studio, type of recording blanks, and how much distortion the user is actually willing to tolerate.

It is not difficult to find the correct operating levels for a complete installation by making test cuts of speech and music at the slowest record speed and smallest diameter that can be used. These tests should be made at gradually increasing levels and the results noted upon reproducing. When the reproduced sound ceases to be clear from a quality standpoint, the maximum level has been exceeded. The presence of barely perceptible distortion is sometimes less objectionable than high surface noise which is one reason, from a practical commercial angle, for not being too strictly guided by measured distortion. The proper volume indicator and attenuator setting can then be marked. In cases where an accidental change in gain of a recording amplifier might occur, a volume indicator or voltmeter should also be used at the output terminals.

Broadcast records at 33.3 rpm cannot be cut at as high a level as those for 78 rpm service because of increased wave steepness resulting from reduced surface velocity of the record material. The difference in velocity, roughly 2½ to 1 for a given diameter, makes it necessary to hold down the recording level at least 6 db. on 33.3 discs.

A higher level is usually maintained for 33.3 lacquer master discs for processing than when the original is to be played back repeatedly, as high level, soft lacquer records will not stand up. Furthermore, surface noise of the direct cut disc is low and there is no need for maximum level. Obviously, in a busy transcription department a variety of recording levels cannot be observed and a compromise level usually results. Whenever there is compromise, the maximum quality cannot be reached in each type of service. Most commercial transcriptions are cut at too high a level from the standpoint of distortion. This distortion is usually due to failure of the reproducing point to track properly because of the steep wave fronts and the departure of the reproduced wave form from the original because the original groove was made with a flat, plain surface but is reproduced with a spherical needle.

When attempting to duplicate (on lacquer discs) the level found on regular studio transcriptions, one should observe the same precautions against overmodulation that were used in making the transcriptions. This means careful control of levels and a simultaneous duplicate recording at a lower level to be used in case the louder one is overcut. By following the same procedure, one will be safe in attempting to equal these levels.[1]

The Crystal Cutter

The magnetic cutters previously described are essentially *constant velocity* devices. Crystal cutters, on the other hand, may be adapted for either constant amplitude recording or constant velocity recording. There are certain advantages to each method as will be explained.

One of the most serious limitations today to good quality reproduction from disc records is surface noise, also referred to as needle scratch. This not only produces an irritating effect, but has restricted the range of frequencies which could be reproduced if quieter conditions existed.

---

[1]High Fidelity Recording Head MI-4887 manual, RCA Manufacturing Co.. Inc., Camden, N. J., U. S. A.

Measurements show that the noise components of disc records are definitely more pronounced in the higher frequency spectrum than in the lower regions. They are caused mainly by tiny irregularities in or on the record surface in the form of abrasives, grain, dust, etc. These irregularities, which are of random distribution, transmit scratch vibrations to the stylus of the phonograph pickup. Surface noise has been effectively reduced in some cases through the use of scratch filters in reproducing circuits or in newer systems such as the *Scott Noise Suppressor*, see Chapter 20. This method of noise reduction has many advantages. Former methods, however, accomplished the above only with a decrease in high frequency response usually above 3000 cycles per second. This results in a so-called "mellowness," which some people prefer, but it cannot be considered good quality.

Some of the recent records made, particularly for radio transcription and sound studio use, are pressed from cellulose acetate or vinylite. Others are made by cutting directly on cellulose nitrate. The surface noise of these records is considerably reduced because of the smoothness of the material, and the fact that no abrasive has been added. These records are made under very accurately controlled manufacturing processes. Such records have provided from 15 to 20 db. improvement in signal-to-noise ratio over commercial shellac pressings. For best quality results, it is necessary to have these records reproduced with high fidelity phonograph pickups employing permanent jewelled styli of optimum shape. In most cases a sapphire is used because of its smoothness and hardness.

While these quieter materials and improved methods of record manufacture contribute considerably to the re-

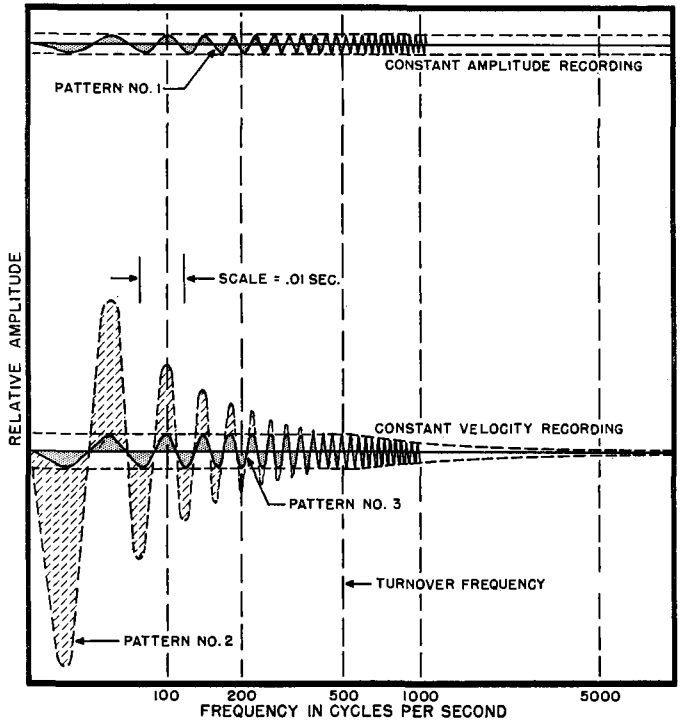

Fig. 4-21. Wave patterns for "constant amplitude" versus "constant velocity" recording.

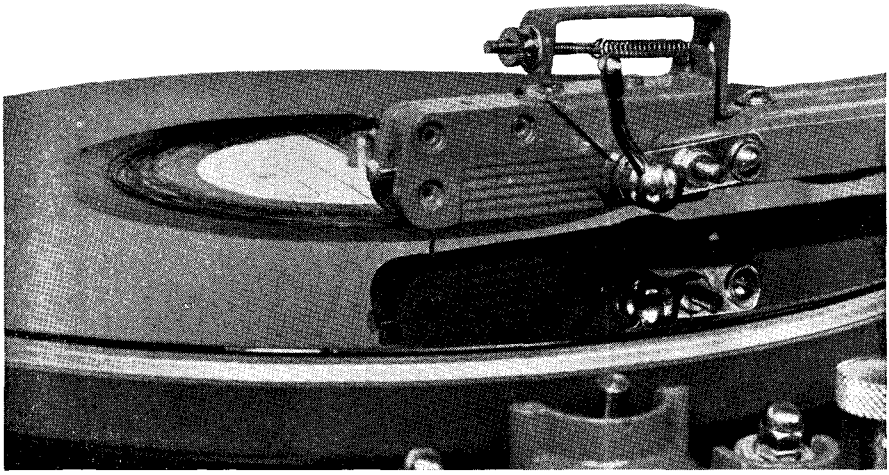

Fig. 4-22. The Brush RC-20 crystal cutter mounted correctly on a low plane and parallel to the record disc. (Courtesy, Radio & Television News)

duction of surface noise it seems logical, since the noise components are more pronounced in the higher frequency spectrum, that additional noise reduction can be obtained by providing a higher signal-to-noise ratio in this range during recording. This consists of increasing the amplitude of the higher frequency undulations in the record in such a manner that they are considerably higher than those created by the tiny irregularities in or on the record surface. This, of course, takes into consideration that during final reproduction the same relationship which existed in the original sound between the high and low frequency amplitudes will be maintained.

This method of noise reduction can be accomplished effectively through "constant amplitude" recording by using crystal pickups in reproduction.[2] Due to the inherent characteristics of these devices, this type of noise reduction requires no equalization in either the recording or reproducing circuits. Wave patterns are illustrated in Fig. 4-21.

The crystal cutter such as the *Brush* Model RC-20, illustrated in Fig. 4-22 is well suited for constant amplitude recording since its stylus displacement (amplitude) is proportional to the input voltages over its useful frequency range. Furthermore, due to the inherent stiffness of the crystal element, the amplitude and frequency response are practically unaffected by depth of cut and variations in hardness of recording materials. Considerable noise reduction also takes place in reproduction since the output voltages, as generated by the higher frequency sound undulations in the record, are considerably greater than the output voltages generated by the tiny irregularities in or on the record material. While it might appear that these higher amplitudes might interfere with the reproducing stylus tracking the grooves at these higher frequencies, this defect can be practically disregarded considering the fact that both speech and musical sounds contain much less energy for the higher frequencies than they do for the lower frequencies. Furthermore, high fidelity crystal pickups are available with low vibratory inertia and styli of small radius of curvature which are capable of tracking high frequency undulations of rather high amplitude.

It is impractical to give definite

[2]Read, Oliver, "Build Your Own Recording Studio," RADIO NEWS, April, 1941.

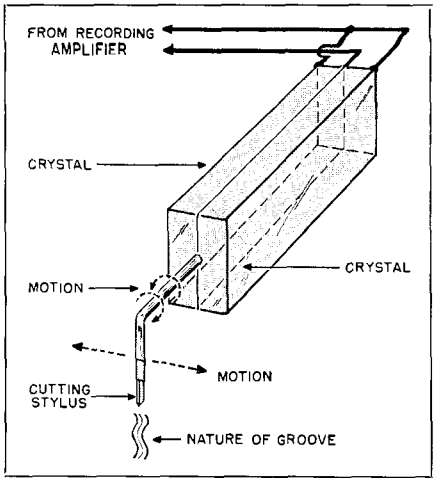

Fig. 4-23. How the crystal cutter modulates a groove when under electrical stress.

values of noise reduction resulting from constant amplitude recording since the surface noise in disc records, due to the random distribution of the surface irregularities, varies in degree and frequency spectrum. In general, constant amplitude recording has provided noise reduction of from 6 to 10 db., as compared to commercial constant velocity recording using the same type of recording materials. In subjective tests, because of the irritating nature of the surface noise, this noise reduction appears even greater.

Characteristics of Crystal Elements

Certain crystalline substances exhibit the phenomenon of piezo—(pressure) electricity, i.e., when they are stressed mechanically an electric charge is produced and, conversely, when a voltage is applied, mechanical deformation (Fig. 4-23) of the crystal takes place.[3]

In the first case, the piezoelectric

[3]Technical Bulletin No. 310, Brush Development Co.

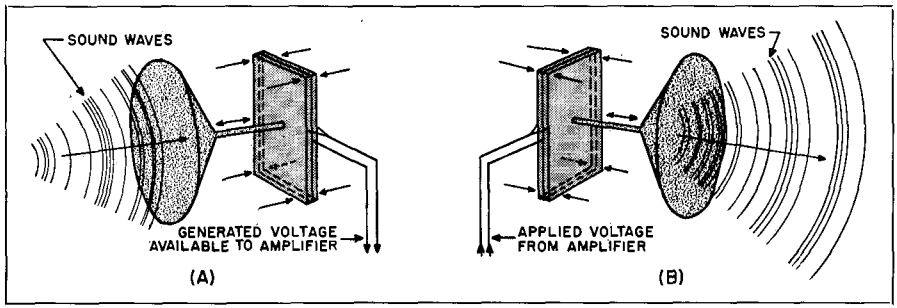

Fig. 4-24. (A) Microphone (generator) and (B) headphone (motor) action.

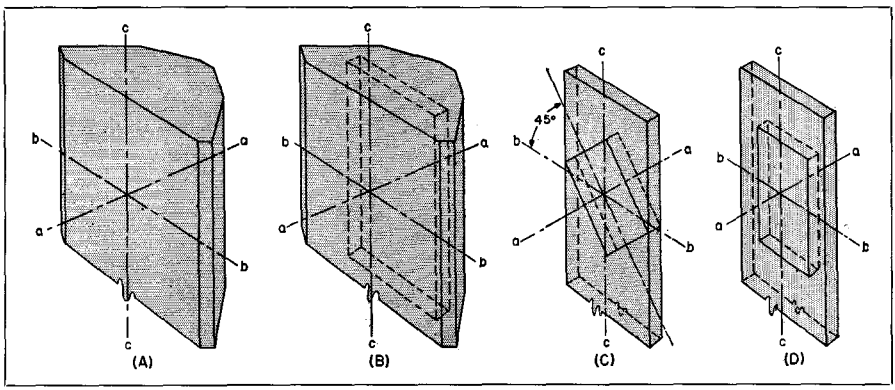

Fig. 4-25. Illustrating how crystals are cut to form "bender" and "twister" elements.

crystal may be likened to a generator since it converts mechanical motion into electricity. Crystal *microphones and phonograph pickups* (Fig. 4-24A) are common examples of piezoelectric generators. In the second case, the piezoelectric crystal may be likened to a motor (Fig. 4-24B) since it converts electricity into mechanical motion. Crystal headphones and record cutters are good examples of the latter.

Considerable research has been done in developing the piezoelectric crystal for use in sound and other devices.

Such crystals are of the common crystalline form of Rochelle salts (sodium potassium tartrate). These crystals possess piezoelectric properties to a greater extent than any other known material, being approximately 1000 times more active than quartz crystals. The crystals are first grown in large, clear homogeneous bars about two feet long. These bars are cut into slabs and then into the small plates used in the final crystal elements.

The properties of these crystal plates may be expressed in terms of three axes, *a*, *b*, and *c*, as shown in Fig. 4-25 A. The more common crystal plates are cut perpendicular to the *a* axis because in Rochelle salt the electric effects along this axis are by far the most pronounced. The two fundamental "a-cut" plates used are the expander and shear plate shown in Figs. 4-25C and in Fig. 4-25D. It will be noted that the expander plate is cut at a forty-five degree angle to the *b* and *c* axes and the shear plate is cut with edges parallel to the *b* and *c* axes.

When a voltage of given polarity is applied to the two faces of each plate, the mechanical motions developed will be at forty-five degrees to the *b* and *c* axes. This means that the expander plate diagrammed in Fig. 4-25C will increase its length and simultaneously decrease its width. These two actions reverse on change of polarity of the applied voltage. The cut of the shear plate Fig. 4-25D shows that a similar action occurs but that expansions and contractions occur approximately along the diagonals of the plate instead of in directions parallel to the edges, as in the case of the expander plate.

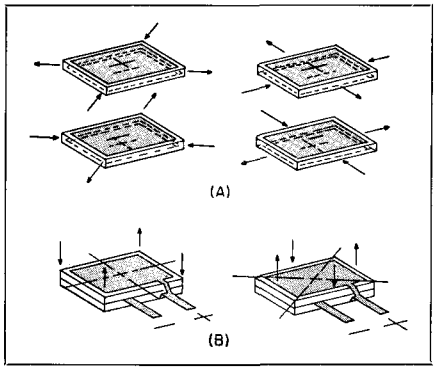

Fig. 4-26. (A) Single electrode plates in relative pre-assembled positions. Arrows show directions of maximum instantaneous strains for the indicated applied voltage polarity. (B) Arrows show location and direction of maximum motion of the element relative to the indicated axis.

Two or more crystal plates properly oriented with respect to each other are cemented together to provide more efficient utilization of the piezoelectric properties of the crystal. Two or more expander plates when cemented together form a *bender* element and two or more shear plates when cemented together form a *twister* element. These names "bender" and "twister" have been selected since they indicate the resulting motion of the final element when an electrical potential is applied.

The Bimorph

Both bender and twister elements, because of their multiple plate construction, are further classified as "Bimorphs." This type of construction has the advantage over the single plate crystal of practically eliminating the generally undesirable effects of saturation and hysteresis and of greatly reducing the effects of temperature on sensitivity and impedance. Construction of the bender and twister "Bimorph" elements are shown in Fig. 4-26A. Prior to the final assembly, the two faces of each crystal plate are

milled smooth and graphite or foil electrodes are applied. Metal leads are connected to the electrodes and the plates, after proper orientation, are bonded together with a cement. The electrodes are connected either in parallel or in series, depending on the application for which the final element is constructed. The parallel lead arrangement, however, is standard and is shown in Fig. 4-26B. The assembled crystal element is finally coated with a specially prepared moisture-proofing material for protection against deterioration in unusually dry or damp conditions for use.

Rochelle salt crystals operate safely from —40 to +130 degrees Fahrenheit. They have their greatest piezoelectric activity at normal room temperature, 72 degrees Fahrenheit. Upon exposure to temperatures higher than 130 degrees Fahrenheit, the crystals lose their piezoelectric properties permanently. The voltage developed by the crystal elements for a given stress remains constant over the temperature range provided that the load impedance for all conditions is much higher than the crystal impedance. This generated voltage is practically proportional to the applied stress. Conversely, the amplitude of motion produced when the crystal is used as a motor, is also practically proportional to the applied voltage.

In the design of circuits using crystal devices, the crystal element may be considered as a pure capacity.

Operation of a Crystal Cutter

A well designed crystal cutter is capable of producing excellent records. It has a wide and uniform frequency response and is practically free from harmonic distortion. Exceptionally efficient in operation, it permits the use of a driving amplifier of relatively low power output.

Because of the inherent stiffness of the crystal and stylus arrangement, the amplitude and frequency response are almost completely unaffected by depth of cut and variations in hardness of recording materials.

Since this cutter is of the crystal-actuated type, the stylus displacement (amplitude) is proportional to the voltages impressed across its terminals over practically its entire frequency range. For this reason, constant amplitude records can be cut without any form of equalization. If desired, commercial constant velocity records may be cut merely through selection of proper coupling circuits to the driving amplifier. The frequency response characteristic is substantially uniform from 50 to 9000 cps.

When connected to the output of an amplifier, the cutter represents a capacity load in which the impedance decreases as the frequency increases. For this reason, it is recommended that a Class "A" or "AB" power amplifier employing triode output tubes be used since the harmonic distortion generated in these tubes is relatively independent of load conditions. Power amplifiers employing pentode or beam power tubes may be used providing they employ a stabilized feedback circuit in the output stage and that the output is shunted with a resistance of suitable value to stabilize the load impedance. Suitable amplifiers will be covered in later chapters.

Coupling Circuits

Figs. 4-27A and B show representative circuit arrangements for triode, pentode, and beam power output tubes. These may be connected in single or push-pull arrangement, although the latter is preferable from the standpoint of reducing distortion in the output stage and that the output is shunted with a resistance of suitable value to stabilize the load impedance.

These diagrams also show connections for loudspeakers in case these may be required for reproducing purposes. The output tubes should be selected to provide an undistorted power capacity of at least 3 watts.

Since the impedance of the cutter will decrease as the frequency in-

METHOD OF RECORDING	TRIODES	PENTODES OR BEAM POWER (With Stabilized Feedback)	PENTODES OR BEAM POWER (Without Stabilized Feedback)
"Constant Amplitude" (See Fig. 4-27A)	R_1—Omit R_2—Omit Sec.—Select transformer so that reflected impedance at A-B is not over 4000 ohms.	R_1—Omit R_2—Omit Sec.—Select transformer so that reflected plate impedance at A-B (as modified by feedback) is not over 4000 ohms.	R_1—Omit R_2—3000 to 4000 ohms. Sec.—Select transformer for load impedance at A-B of 3000 to 4000 ohms.
"Constant Amplitude" (See Fig. 4-27B)	R_3—Omit R_4—Omit *Rp—Not over 4000 ohms.	R_3—Omit R_4—Omit *Rp (Effective)—Not over 4000 ohms.	R_3—Recommended load impedance of vacuum tube. R_4—Omit Rp—Select vacuum tube so that recommended load impedance is not over 7000 ohms.**
Commercial "Constant Velocity" (See Fig. 4-27A)	$R_1 = \frac{1}{2} Z_T$ (See Fig. 7) R_2—Omit Sec.—Select transformer so that reflected plate impedance at A-B is equal to $\frac{1}{2} Z_T$. (See Fig. 4-29)	$R_1 = Z_T$ (See Fig. 7) R_2—Omit Sec.—Select transformer so that reflected plate impedance at A-B (as modified by feedback) is equal to $\frac{1}{2} Z_T$. (See Fig. 4-29)	$R_1 = \frac{1}{2} Z_T$ $R_2 = \frac{1}{2} Z_T$ (See Fig. 4-29) Sec.—Select transformer for load impedance at A-B equal to R_2.
Commercial "Constant Velocity" (See Fig. 4-27B)	R_3—Omit $R_4 = Z_T$ (See Fig. 4-29)	R_3—Omit $R_4 = Z_T$ (See Fig. 4-29)	R_3—Recommended load impedance of vacuum tube. $R_4 = Z_T$ (See Fig. 4-29)

*In case of push-pull, Rp equals plate resistance of both tubes.
**Provides flat response only to 3500 c.p.s.

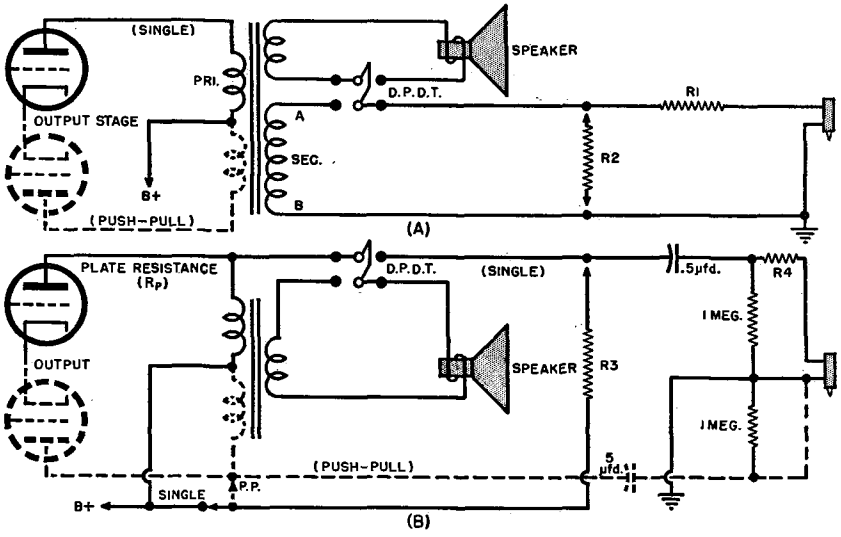

Fig. 4-27. (A) Schematic diagram shows cutter connected across transformer secondary. (B) Diagram shows how cutter may be connected directly across plates of output tube. Table shown gives component values for either constant amplitude or constant velocity recording. Class "A" or "AB" single or push-pull output tubes should provide an undistorted power handling capacity of at least 3 watts.

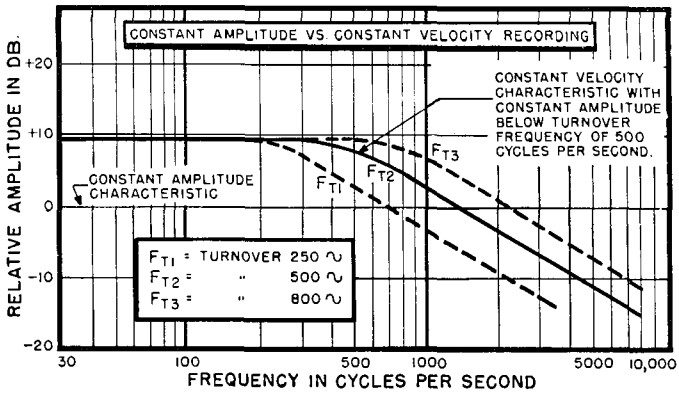

Fig. 4-28. Curve shows relative amplitude in db. in relation to frequency in c.p.s. for constant amplitude and constant velocity recording.

creases, this means that if the cutter impedance is high with respect to its coupling circuit over its entire frequency spectrum, the cutter will operate on a constant amplitude basis. When the cutter impedance equals the impedance of the coupling circuit, its response will be cut down 3 db. at the frequency where these impedances are equal. Above this frequency, or the turnover frequency, the response will fall off at the rate of 6 db. per octave. In other words, the cutter will operate at a constant velocity basis *above* the turnover frequency and at a constant amplitude basis *below* the turnover frequency. By proper selection of circuit components (usually a transformer and/or a series resistor) this turnover can be placed anywhere in the frequency spectrum. If the turnover is located anywhere between 250 and 800 cps, the cutter will engrave constant amplitude records.

The circuit components for engraving either constant amplitude or commercial constant velocity records may be selected in accordance with the table shown in Fig. 4-27. Typical frequency response characteristics for these two types of recordings are shown in Fig. 4-28.

In the case of constant amplitude recording, the frequency response on an amplitude basis is uniform throughout the frequency range. These records can be reproduced with pickups (such as the *Brush* models PL-20, PL-50 and PL-25) without equalization in the reproducing circuit. In the case of commercial constant velocity recording, the frequency response (amplitude basis) is uniform only up to the turnover frequency, usually between 250 and 800 cps and falls off at the rate of 6 db. per octave above this frequency.

In many cases where commercial crystal pickups employing steel needles are used, it may be desirable to cut records with a turnover at some higher frequency than for commercial shellac recordings. Since many of these pickups have resonant peaks between 4000 and 5000 cps, a turnover at from 1000 to 3000 cps, may produce a more uniform frequency response. It will be necessary to experiment with the turnover frequency to obtain best results. When records with a high turnover are reproduced with crystal pickups, this will result in a uniform response up to the turnover frequency with attenuation of 6 db. per octave above this frequency.

In constant amplitude cutting the actual impedance from which the cutter operates should not exceed 4000 ohms. This may be obtained from an output transformer as shown in Fig. 4-27A or by connecting directly to the plates of the output tubes as shown in Fig. 4-27B. In the latter case the plate resistance (R_p) of the vacuum tube

(plate resistance of the two tubes for push-pull) should not exceed 4000 ohms. When a uniform frequency range up to 9000 cps, is required, constant amplitude recording requires approximately 50 volts for average modulation of the record (maximum swing on r.m.s. meter).

In cutting commercial constant velocity, the impedance from which the cutter operates will depend on the turnover frequency selected. This may be obtained from an output transformer and a series resistor as shown in Fig. 4-27A, or by connecting to the plates of the output tubes through a series resistor as shown in Fig. 4-27B. For example, by reference to Fig. 4-29 it will be noted that where a turnover frequency of 500 cps, is required, the cutter should operate from an impedance of approximately 44,000 ohms. This is the cutter impedance at this frequency. Referring to Fig. 4-27A this impedance should be divided between the series resistor and the secondary impedance of the output transformer. Generally, these two may be made equal, viz. 22,000 ohms for a turnover of 500 cps. Resistor R_1 should not be smaller than the reflected resistance of the amplifier at *A-B*, Fig. 4-27A. In the event that the plate resistance (R_p) for two vacuum tubes in push-pull is 1600 ohms, the output transformer would then have an impedance ratio of 1600 : 22,000 ohms. This corresponds to an impedance ratio of approximately 1 : 13.8. or a turns ratio of 1 : 3.7. Since such an odd ratio transformer may not be easily obtained one having a turns ratio of 1 : 3.5 or 1 : 4 will be found suitable without shifting the turnover frequency seriously. In selecting the output transformer, it is important that there be a sufficient power handling capacity and uniform frequency characteristics throughout its range. When the turnover frequency

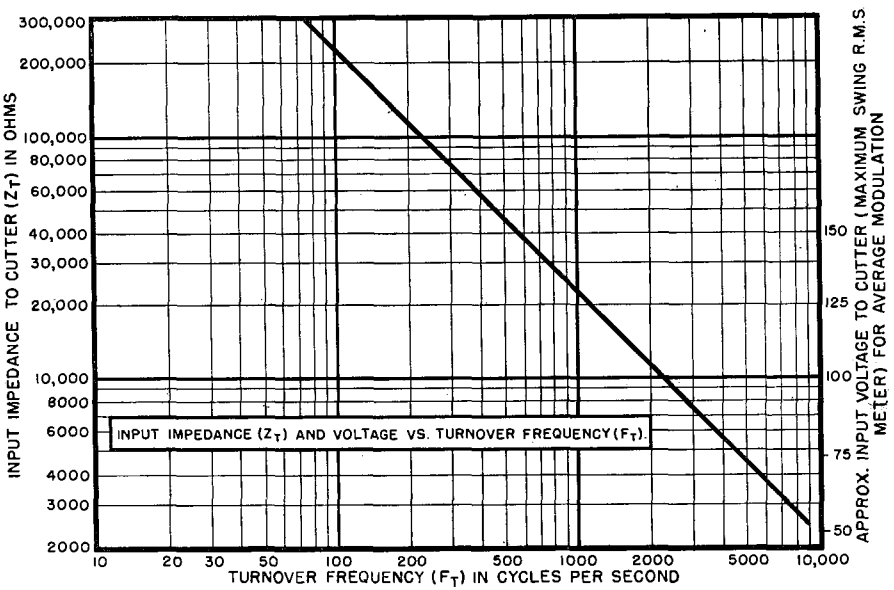

Fig. 4-29. This chart may be used to obtain the input impedance (Z_T) to the cutter for commercial "constant velocity" recording. This impedance will vary for the "turnover frequency" selected. The cutting voltage required for average modulation of the record on the basis of the "turnover frequency" may also be obtained from this chart. For example: For a "turnover frequency" of 500 cps the input impedance (Z_T) to the cutter should be approximately 44,000 ohms. This impedance should be divided between the transformer secondary (sec.) and series resistor, R_1, as in Fig. 4-27A or lumped as a series resistor, R_4, as in Fig. 4-27B. For a "turnover frequency" of 500 cps approximately 150 volts is required for average modulation of the record.

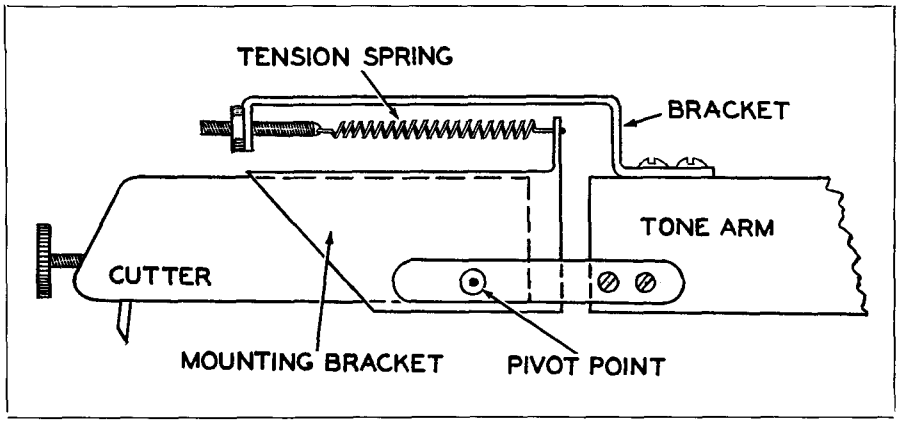

Fig. 4-30.

is between 250 and 800 cps commercial constant velocity recording requires approximately 150 volts (maximum swing on rms meter) for average modulation of the record. See Fig. 4-29.

It will be noted in Fig. 4-28 that in commercial constant velocity recording, the lower frequencies are cut approximately 10 db. higher than constant amplitude recording. Constant amplitude can be cut at a higher level for higher record modulation. However, it will be necessary to reduce the frequency range during recording. This can be accomplished by providing a turnover below 9000 cps much in the same manner as is done at 250 to 800 cps, so that only those frequencies below this point are cut constant amplitude, then the voltage applied to the cutter may be increased to approximately 80 volts, (maximum swing on the rms meter). Lower turnover frequencies will permit higher voltages to be applied to the cutter for higher record modulation. See Fig. 4-28.

Mounting the Crystal Cutter

To insure good frequency response and a clean cut of constant depth, the following recommendations should be taken into consideration:

1. The mounting bracket for the cutter should be designed so that the pivot point is fairly close to the record plane so as to minimize the effects of any movement which might develop while cutting, due to forces on the record cutting stylus. Fig. 4-22.

2. The pivot point of the mounting bracket should provide free movement to the cutter in a vertical plane. It should, however, be free of play so as to give a stiff support to the cutter against any vibration caused by the lateral motion of the cutting stylus on the record. Needle point bearings are most suitable for this use.

3. Some means for governing the depth of cut should be provided. This may be accomplished by a spring held under proper tension as in Fig. 4-30.

4. The moment of inertia should be reduced to a minimum with respect to vertical motion of the cutter. Any mounting weight which will add to the stylus pressure should be kept at a minimum.

5. The cutter may advantageously be completely enclosed within an arm wherever possible.

CHAPTER 5

Disc Recorders

A Discussion of Commercial Home and Professional Recorders

Introduction

● In general there are two basic classes of disc recorders: (a) The Home Recorder for the novice and (b) The Professional or Studio Recorder for broadcast application and for the recording of master or instantaneous discs for commercial purposes. The main differences between these two basic types are:

1. Mechanical construction.
2. Method of cutter drive.
3. Portability.
4. Quality of components.
5. Mechanical and electrical tolerances.

Recordings of good quality for home listening are the rule if precautions are taken and if the home recordist follows the instructions of the manufacturer in using his recorder. The following step by step instructions and illustrations from the Operating Manual and Service Manual pertaining to the *Meissner* Disc Recorder (Fig. 5-1) Model 4DR are most complete and informative for disc recorders of the home portable type and are herein reproduced by courtesy of the manufacturer. The techniques apply to all recorders in the same category and may serve as a complete guide to home recording of disc records.

Home Recording Technique

One of the most important phases of home recording is close attention to the proper recording volume. The best operation is obtained when the "Neon" level indicator, Fig. 5-1, is lit on the relatively normal and loud passages, and goes out on the soft passages. A close control of program level is required to achieve such results, but every bit of effort expended in the attempt will be worth while.

If the volume is too high it will cause distortion to be recorded on the disc. Once this distortion is recorded on the disc, no playback amplifier, however perfect it may be, can reproduce the program without distortion. Too much volume while recording will also cause overcutting or cutting through; that is, the stylus swings over into the adjoining groove. This results in poor tracking and may even damage the stylus itself since it may then cut through to the base material. If the recording level is too low, the surface noise is exaggerated and the playback has to be made with a high setting of the volume control. In the extreme case of very low recording level, the volume control on playback may have to be set so high that a low frequency "microphonic howl" may be set up that can be eliminated only by turning down the vol-

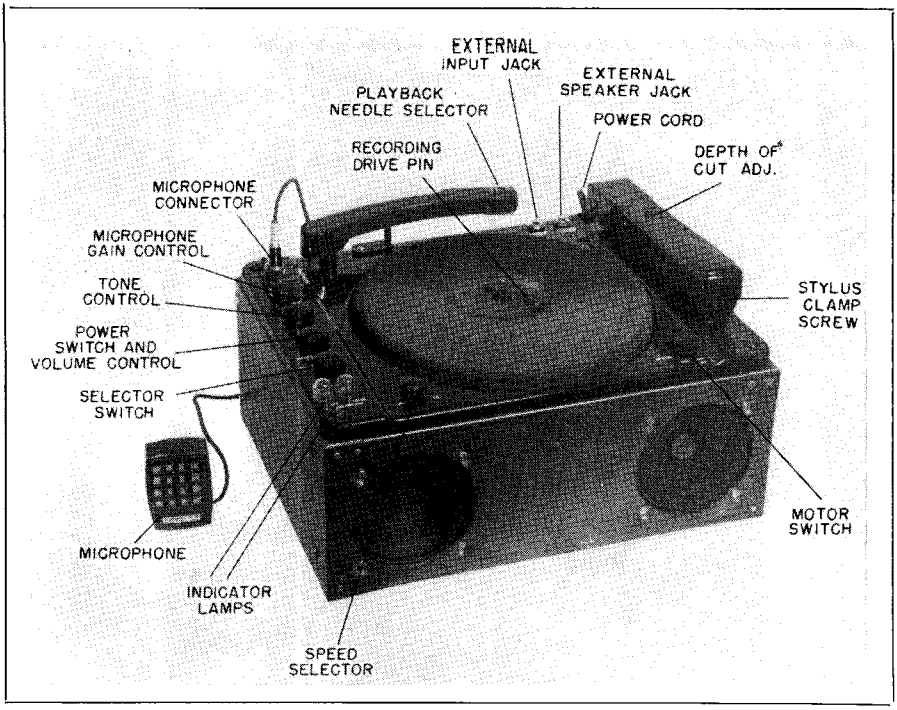

Fig. 5-1. The Meissner portable disc recorder, showing principal components and controls. (Courtesy Meissner Mfg. Co.)

ume, by using an external speaker, or by playing the record on a phonograph that has its speaker well isolated from the turntable and pickup.

When a musical program of a limited range of volume level is being recorded, little attention need be paid to the volume level once it has been set. However, if the program has a wide range of level, the volume control will have to be turned up somewhat during the soft passages and reduced during the loudest passages. Such a practice is standard in professional recording and is the only way in which, for example, the tremendous volume range of a symphony orchestra from a single instrument solo to full orchestra can be recorded without having the loud passages "cutover" into adjacent grooves or having the softest passages covered up by needle scratch. It will be helpful when recording to bear in mind that the "level" neon indicator responds almost directly to the volume level being applied to the cutting head. In many instances the monitoring volume may be used as a reference to the recording level. In this case the operator must note how loud the monitoring level is when the "Level" indicator lamp, Fig. 5-1, is lit.

Home Recording Styli and Their Care

Recording styli* are of three general types of material: ordinary hard steel; tool steels and alloys, such as stellite; and stones, such as sapphire. Styli are made with long and short shanks and with various degrees of included angle. The short shank type of styli should be used with this recorder, and the included angle should not exceed 87 degrees. If an effort is made to use a long shank stylus, it will be found to be impossible to properly adjust the stylus angle.

*For a complete reference on cutting styli, see **Chapter 7.**

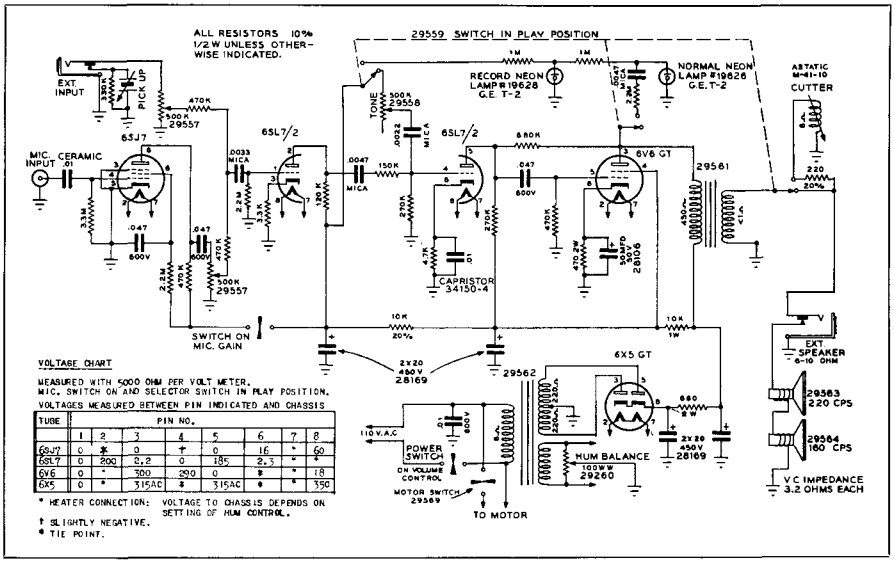

Fig. 5-1A. Schematic of electrical systems used in the Model 4DR disc recorder.

For the highest quality recordings, the importance of the cutting stylus should not be overlooked. The edges of the stylus are extremely sharp and the points of the better styli have a small radius. The face of the stylus is flat and set at right angles to the surface of the disc. The groove is created by the cutting action of the stylus, which actually cuts out and removes a portion of the surface of the disc. See Figs. 5-2 and 5-3.

The surface noise or scratch which will be produced when the record is played is dependent upon the polish or smoothness of the groove. If the stylus is not properly finished or has broken and jagged edges, the walls of the groove will be rough, and scratch will be the end results.

Fig. 5-3F illustrates the microscopic portion of the cutting stylus which is actually used in making a record. Since we are especially interested in less than .002 of an inch of the tip (the part most easily damaged) of the stylus, great care should be taken that it is not damaged.

The two accidents which are most likely to damage a stylus are:

(1) Dropping the cutting arm so that the stylus strikes some surface, thereby chipping or breaking the tip of the stylus.

(2) Cutting through the record coating into the base material. The latter may be caused by poor quality or damaged records, either by cutting through thin spots that may exist, or by digging in after the stylus has been thrown off the record by bumps or hard spots.

If the thread has not been properly brushed to the center and has accumulated around the stylus, the operator may unintentionally lift the stylus from

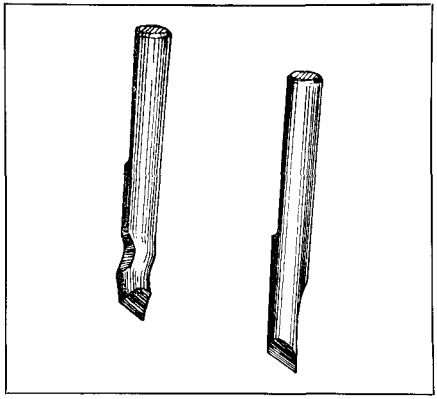

Fig. 5-2. Details of steel home recording styli.

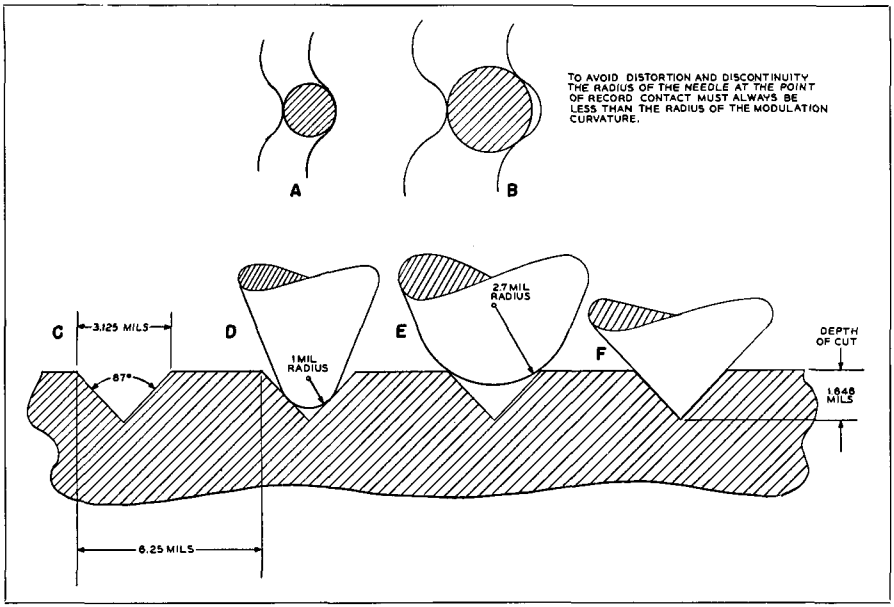

Fig. 5-3. Illustrating the action of groove fit of styli having various shapes.

the disc in clearing the tangles. Also, the stylus may run over a bunch of the thread and be thrown from the record.

Another cause of cutting through is the result of attempting to record too near the limit of feed. Should the follower arm advance to the point where it contacts the follower arm stop, the follower tongue has no choice except to climb over a thread of the lateral feed screw. When this happens the cutter arm will be jerked back violently, with the result that the end of the recording is ruined as well as the cutting stylus. This may be avoided by cutting a single groove as near the end of cutter arm travel as possible and then using this groove as a marker.

Cutting through may also be caused by improper depth of cut adjustment. Last but not least, the heavy walker and door slammer may jar the recorder sufficiently to cause the cutting head to bounce, with the resultant cut-through.

From the foregoing it seems that in general home recording service, especially if the equipment may be handled by many people, as at parties, amateur dramatics, amateur concerts, etc., it is more economical to use good quality regular steel styli that can be discarded without regret if accidentally damaged rather than to invest in a supposedly long-lived high priced stylus whose life may be greatly shortened by the careless act of some well-meaning but uninformed person. However, it should also be borne in mind that at 33⅓ rpm a recording made with a regular steel stylus will have more noise than a record cut with a high quality stylus. At this slow speed the regular steel stylus has a tendency to tear the thread out rather than to cut smoothly.

Home Recording Blanks (Discs)

This recorder is designed to cut records up to 10 inches in diameter and to play records up to 12 inches in diameter.

Probably the best rule for selecting discs is that of experience, either personal or that of your dealer. The record that performs best for you on your recorder is the best for you to use. Concentrate on that particular brand if you wish to produce consistently good recordings.

The most important characteristics of a record for "home" recordings are listed below to be used as a guide in comparing and selecting records:

1. For safety, always select records of the slow-burning type.

2. The blank should cut a clean shiny groove and produce a continuous thread. Records which produce a rough and dull looking groove, or which powder the material cut out of the groove, or which break the thread up into many pieces, or that produce a "sticky" thread, are not good records.

3. The "needle scratch" should be low. Generally the record producing the smoothest looking grooves will give the lowest needle scratch, but a more reliable method of testing is to cut a few unmodulated grooves at the same radius and with the same stylus on each of the records to be compared, and then to play them successively with the same setting of the volume control for all records, selecting the one producing the least volume of scratch, provided its other characteristics are acceptable.

4. "Rumble" is produced on some records having very flexible base materials. This is especially true of paper base records. It is almost axiomatic that if a high quality recording is desired, a paper (or other very flexible) base record should not be used; however, because of the economy that such discs offer, they probably enjoy the maximum volume of sale. The quality of records made with very thin flexible blanks may often be improved by violating a rule and making the cut with two discs on the turntable.

5. The "aging" characteristics of records is a factor influencing the production of consistently good recordings, but is somewhat difficult for the home recordist to check unless he is on the lookout for such differences and is a keen observer. Some records cut beautifully at a certain age and less well both before and after that time. Others cut well when relatively fresh, while still others will not cut well until they have aged some time. This aging characteristic may explain why a certain brand of record may give excellent results at one time and not at another.

Public Address System

The audio amplifier in this unit has ample power for many applications as a public address amplifier. When coverage of an area greater than that of a medium sized room in a home is desired, it is best to use an external speaker. Such a speaker should be mounted in a baffle or carrying case, and a little experiment in its placement will soon show how best results may be obtained.

When using the unit as a public address system, it will be found that if the speaker is operated near the microphone, the sound from the speaker will feed back into the microphone, causing a "howl." This is true in any PA system and may be remedied by (a) removing the loudspeaker farther from the microphone; (b) reducing the volume; (c) using a directional microphone turned so that its direction of greatest pickup is away from the loudspeaker.

External Speaker

If it is desired to use an external speaker instead of those in the unit, provision is made for doing so. The voice coil of an external speaker may be plugged into the external speaker jack located on the back side of the turntable base (Fig. 5-1). This jack accommodates a standard phone plug, and ordinary #18 parallel lamp cord may be used for the connection. A cord length up to 50 feet may be used without noticeable loss of efficiency. The voice coil impedance of the external speaker should be 6 to 10 ohms. Insertion of the jack into the "external speaker" plug cuts out the internal speakers and substitutes the external speaker. An external speaker so used may be either of the permanent magnet type or of the field coil type with self-contained field supply. Connection is made directly to the speaker voice coil.

The advantages of such an arrangement are that for use as a public ad-

dress system, the speaker may be placed in a remote position away from the amplifier to get better sound coverage in a room or building, at the same time reducing the tendency for microphonic feedback when high output is desired.

Inputs

The Model 4DR has two input channels, Fig. 5-1A, each with its own control. Input may be made to the microphone connector (see Fig. 5-1) which is controlled by the "microphone gain" control. The playback pickup is normally connected to the other input channel which is controlled by the "Volume" control, but this channel may be used for input from any high level source by making connection through a standard phone plug which is plugged into the "External Input" jack (See Fig. 5-1).

While satisfactory recordings may be made from a radio by placing the microphone in front of the speaker, better results will be obtained by taking the signal from the receiver at an earlier stage, thus avoiding the shortcomings of the speaker system, the air linkage to the microphone which may introduce room reverberations and external noises, the microphone itself and the microphone preamplifier in the recorder.

Mixing

The input from either channel may be superimposed on that of the other, regardless of the setting of the selector switch, by merely advancing the appropriate control. Before attempting to make a recording by mixing the input from both channels, it will be well to do a little experimenting with the setting of the two controls to insure that the signals from the two input channels have the correct relative audio levels when they reach the cutting head. This may be done by adjusting each control while the other is turned to zero, adjusting to the correct recording level by observing the neon indicator and noting the setting of the control knob. After the correct setting for each has been determined in this way, set each control to its correct position and make the recording.

Monitoring

It is generally desirable for the operator to listen to the output of the amplifier while the recording is being made. For this reason the speakers remain operative when the selector switch is in the "Record" position but operate at greatly reduced power due to the insertion of an attenuating network. Thus the operator may hear the program material at the same time it is being recorded and can determine when the recording should be stopped, etc.

Should it for any reason be desirable to silence the internal speakers during a recording, this can be accomplished merely by inserting a phone plug into the external speaker jack. The operator may then monitor the program by connecting an ordinary pair of high impedance headphones to the phone plug.

Tone Control When Recording

The tone control is removed from the circuit when the selector switch is in the "Record" position so that no attention need be paid this control while recording.

Stylus Angle Adjustment (Recording Arm Height)

Due to the manner in which the cutting head is mounted in the recording arm (Fig. 5-4A), the height of this arm is directly related to the angle of the stylus face relative to the surface of the recording blank. The angle is said to "lead" when it is greater than 90 degrees and to "lag" for lesser degrees. As the adjustment approaches 90 degrees from a lag of a few degrees, the optimum will be attained and the smoothest groove with the least noise will result. Beyond this setting a point will be reached where the tip of the stylus will dig into the record blank, instead of cutting a groove, causing chatter and/or squealing. The useful

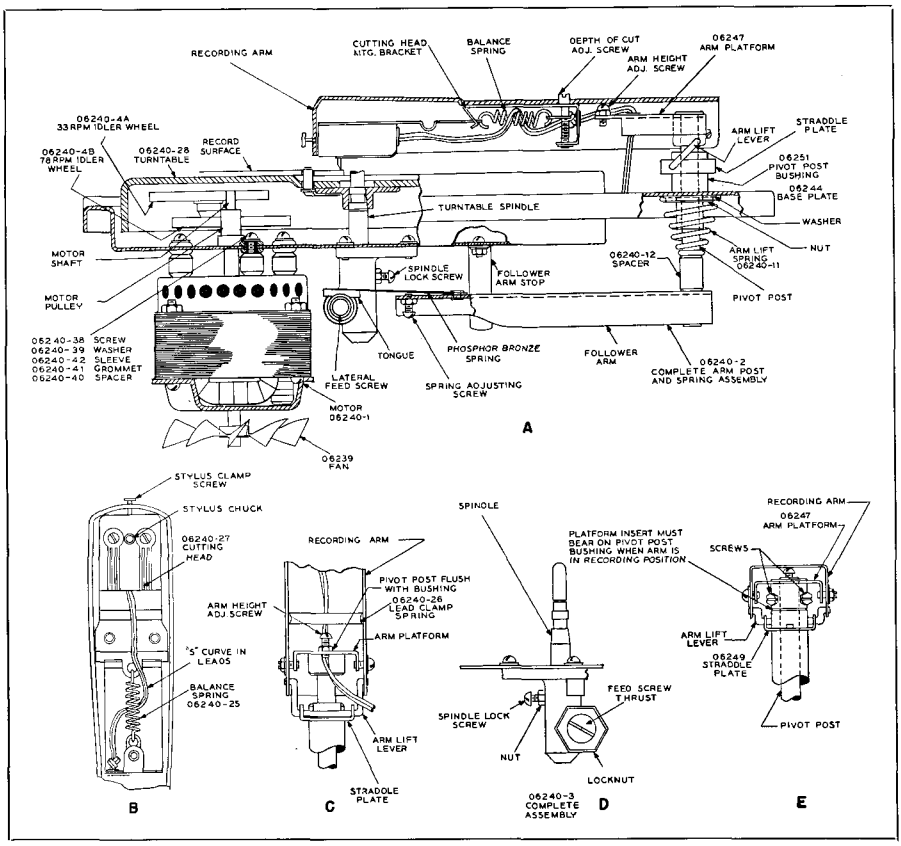

Fig. 5-4. Mechanical components used in the Model 4DR and adjustments for the recording stylus.

limits generally range from 90 degrees (vertical) to 5 degrees lagging for the various quality of styli. Ordinary hardened steel styli have a sharp "V" point and require a lagging angle, while the better quality styli have a slight radius on the tip and may operate near the vertical (90 degrees). When adjusting the angle, it should be remembered that chattering and squealing may also be caused by a dull recording stylus or by a blank which for some reason has poor cutting qualities.

Since the angle of the stylus is controlled by (a) its own length, and (b) the distance from the recording arm to the surface of the blank, and since the stylus should always be inserted as far as it will go in the stylus chuck, the stylus angle is controlled by the recording arm height. Satisfactory results will generally be obtained with most styli when the recording arm height is adjusted as follows:

1. Place on turntable an uncut record of the type that is to be used for recording.

2. Place stylus in the cutting head. Insert it as far as it will go, rotate it until the long flat on the shank of the stylus faces the stylus screw, then firmly tighten the screw.

3. Raise the cutter arm well up from its rest, swing it over the record and carefully lower it so that the stylus rests on and near the center of the record (which should not be revolving). Observe the position of the stylus clamp in the slot in the cutter arm. If the screw is approximately in the center of

the slot no adjustment of the cutter arm height is required, but if the stylus screw is close to either the top or the bottom of the slot the arm should be adjusted in the following manner:

(a) Lift the cutter arm into a vertical position. Underneath the arm will be found a machine screw on which the arms rests (see Fig. 5-4C). The adjustment of this screw is preserved by a lock nut. Loosen the lock nut and rotate this screw until the stylus screw occupies the center position in the slot when the cutter arm is in the recording position, then tighten the lock nut and again check the position of the stylus screw to see that the adjustment has not been disturbed by tightening the lock nut.

(b) Cut a few blank grooves (volume control at zero) while watching the stylus clamp screw to see that as the record revolves, the screw does not approach either end of the slot. If this condition holds true, the height of the cutter arm is properly adjusted until a new stylus is used having a length a great deal different than the stylus used in the original adjustment, or unless records of a new thickness are used that are sufficiently different from the original records to require readjustment of cutter arm height.

If the normal position of the screw is too low, the entire weight of the cutting arm is placed on the stylus when the stylus screw hits the top of the slot. This heavy weight will cause the stylus to dig into the record base and ruin at least the record and in all probability the stylus as well.

For those who wish the best results obtainable, and who are using the highest quality styli, together with heavy base records having plane surfaces, a visual check of the stylus angle may be made in one of the following manners:

(a) With the stylus resting on a stationary blank, a sight may be taken across the face of the cutting stylus and one side of the center spindle.

(b) With the stylus resting as above and with suitable lighting, the reflection of the stylus may be observed. When the angle is 90 degrees, the plane of the stylus face and its reflection will appear as a straight line.

Depth of Cut Adjustment (Cutting Pressure)

Variations in the hardness of different record coatings and in the shape and sharpness of the point of different cutting styli and the end use of the record all lead to the requirement for different cutting pressures.

Since the depth of cut is directly related to the width of the groove, the simplest way to determine the depth is to make a visual inspection of the width of the groove. The average home recordist will generally obtain the best results when the groove width is equal to the adjacent uncut surface ("land"). After cutting a few unmodulated grooves, the record may be held at an angle to the light in such a manner that the grooves are visible to the unaided eye, or a small hand glass may be used. When making the observation, it should be borne in mind that without the aid of a glass, the relative width of the groove will appear to be slightly wider than it actually is.

The depth of cut is controlled by the screw which protrudes through the top surface of the cutting arm (see Fig. 5-1 and 5-4A). Turning the screw to the right (clockwise) will increase the pressure and depth of cut. Too wide a groove leads to poor tracking due to the stylus cutting into adjacent grooves during periods of heavy modulation and to "echos" and "ghosts." The latter (echos and ghosts) are caused by the stylus deforming the soft surface of the record; that is, the narrow land is pushed over into the adjoining groove. When this occurs the playback needle will be aware of the ridges caused by the lateral pressure of the stylus in the adjacent groove and will faintly reproduce the sound which was actually recorded in the adjacent grooves. "Ghost" is from modulation in the groove adjacent to and preceding the actual modulation. "Echo" is from

modulation in the groove adjacent to and following the actual modulation. Echos are much weaker than ghosts because the cutting stylus has no thin wall to push in that direction and can only create pressure areas which are relieved as the stylus passes during the following revolution.

As explained above, a 50-50 cut is generally best but at times a deeper groove with a little less modulation is desirable, especially if the recording is to be used under poor conditions such as on a slanting or uneven turntable, in mobile equipment, or by children. Shallower grooves may be cut with greater modulation but many reproducers will not track a shallow groove because the inertia of the needle is so great that it cannot follow the bends in the groove as it passes, and is thus thrown out of the shallow groove. Reproduction from such equipment might not be faithful, but the needle would at least stay in a deeper groove.

Although the Model 4DR is amply powered, it should be remembered that the more material the stylus is cutting from the record, the harder the record and the duller the stylus, the more power is required. When all conditions are adverse, wows may result.

Final depth of cut adjustment should be made after the stylus angle adjustment has been made. Depth of cut should be checked after changing type of recording blanks, after changing stylus, and at intervals during the life of the stylus.

Adjustment of Recording Arm Mounting

As the recording arm is lowered into cutting position, its height at the back end or pivot is automatically positioned by the mechanism of the system (see Fig. 5-4E). Should the cutting arm fail to return to its correct horizontal position, check the arm lift spring and the pivot post bushing, and note that the arm platform is properly positioned (Fig. 5-4C and 5-4E) and secured to the pivot post. If the pivot post is binding in its bushing, apply petroleum as outlined under "Lubrication."

The recording arm assembly is secured to the follower arm post by means of two hex headed set screws (see Fig. 5-4E). If these screws become loose or if the relative position between the follower arm and the recording arm platform become altered in any manner, make certain that the following conditions are complied with: (a) the follower arm post should be flush with the bushing in the recording arm platform (see Fig. 5-4C); (b) with the cutting arm swung in to where the follower arm strikes its stop, the stylus should be cutting approximately at a 3½ inch diameter. If this setting is changed, check to see that the cutting arm swings out far enough to let it be properly positioned on its rest. When the above adjustments are made, the adjustment of the tongue tension screw should be checked (see below "Engagement of the Feed Screw").

The cutter arm proper is secured to the recording arm platform by means of two pivot screws, one of which is adjustable (see Fig. 5-4E). Should there be any lost motion between the cutting arm and the follower arm after the platform has been secured to the post, tighten the adjustable screw until the looseness disappears, and tighten the lock nut.

Engagement and Adjustment of Feed Screw

Engagement of the knife edge of the phosphor bronze spring, which is riveted to the follower arm, usually starts to take place when the end of the cutter arm is about two inches above the surface of the turntable. When raised to a greater height, the arm is free to travel horizontally within its stop limits. A stop screw has been provided (see Fig. 5-4A) to permit the disengagement of the cutting arm from the feed screw when the arm is at a minimum height. This screw should be adjusted and locked so that it practically

touches the spring when the cutting arm is lowered to cutting position and the knife edge is properly engaged with the feed screw.

Normally the full pressure of the spring should be allowed to bear against the feed screw and should be so adjusted unless the pressure is so great as to load the motor and cause uneven turntable speed. When this condition exists, reduce the pressure slightly by turning the stop screw in a clockwise direction. Exercise great care in making the adjustment, as too little pressure will lead to uneven spacing of grooves.

If the stop screw is so adjusted that there is not enough pressure on the feed screw, the tongue will climb the threads on the feed screw. This increases the pressure and the tongue will then slide down the thread, causing uneven spacing of lines on the disc.

In order to eliminate binding of the pivot post in its bushing and to insure proper linkage between the follower arm and the feed screw, it is essential that the platform insert bear on the pivot post bushing (see Fig. 5-4E) when the cutter arm is in the recording position. If the pivot post binds in its bushing so that the arm is held above its normal position the tongue will not bear properly on the feed screw. During the cut, the post may drop to its normal position and if the drop is sudden, the head may bounce and ruin the record and possibly the stylus. If the drop is gradual, the depth of cut and the stylus cutting angle will change during the cut so that some part of the record will be improperly cut.

If any of the parts shown in Fig. 5-4C and 5-4E have been replaced and if the cutter arm will not then seat properly, check to see that the arm lift lever is not holding up the arm. When the arm is down in cutting position, the straddle plate should be free at all points so that it can be moved slightly. If the arm lift lever is bearing in the notches of the straddle plate so that the arm is held up, increase the depth of the notches slightly with a small round file. When the straddle plate notches have the proper depth, the lifting action on the pivot post does not begin until the end of the cutter arm has been raised approximately ¼ inch.

The threads of the feed screw should always be kept absolutely clean and free of foreign matter. Minute particles of grit or dirt will cause uneven spacing of grooves.

Excessive end play in the feed screw is another cause of uneven spacing and an adjustment has been provided to take up this play (see Fig. 5-4D). The feed screw should have as little end play as possible and still rotate freely. This may best be observed by removing the spindle so that the feed screw is free to turn. Remove the spindle lock screw and pull out the spindle. When replacing the spindle, some trouble may be experienced in getting the spindle to seat properly. This is due to the piston action of the spindle in its lower bearing, and pressure should be applied so as to force the oil up and out of the bearing and permit proper seating. After replacing the spindle, tighten the spindle lock screw as much as possible and still maintain free rotation of the spindle and tighten its lock nut.

Extreme care should always be the watchword when servicing the instrument. In spite of the great mechanical strength of the feed screw, it is quite easily damaged. Only a small amount of pressure on the end of the screw will bend it sufficiently to cause poor recording. A bent feed screw is in many instances the cause of a "pattern" on the record.

Reproducing Crystal and Needles

The Model 4DR is equipped with a crystal pickup cartridge (*Electro-Voice* Model 16-0) having a needle with two points. A mechanical arrangement is provided for selecting either of the points. When the lever (Fig. 5-1) is in the 33⅓-45 position, the 1 mil point contacts the record and when the lever is in the 78 position the 2.7 mil point contacts the record.

The 2.7 mil point should be used when playing 78 rpm commercial recordings. The 1 mil point should be used for playing all 33⅓ rpm and 45 rpm commercial recordings and for all recordings made on this instrument regardless of speed.

To replace the needle: with the aid of a small screw driver, slip the cartridge out of its holder. Slide the connector clips off the pin jacks. Do not attempt to pull the clips off by the lead wires. Now that the cartridge is free, grasp the needle around its points with the thumb and fore-finger and exert a steady pull in line with the axis of the needle shank, and the tip will slide out. Insert the new tip and apply a firm pressure so that it will seat properly. Slide the clips back on the pin jacks and snap the cartridge back into its holder.

When installing a new cartridge, observe that one of the pin jacks may have a foil connection from its base to the cartridge housing. This connection should be broken by severing the foil with the aid of a small screw driver or a sharp pointed instrument.

Since most home recordists will want to play their recordings on other instruments, either their own or those of friends, the mechanical relationship between the groove and the reproducing needle should be briefly reviewed. The average 78 rpm commercial recording has a groove which is approximately 6 mils wide. The sidewalls of this groove are inclined 45 degrees and the bottom has a radius of 2.3 mils. It is easily visualized how a needle with a radius of 1 mil may skate in the bottom of such a groove. For playing such commercial records, the ideal condition is generally approached with a needle tip which has a radius of 2.7 mils. Such a needle rests on the sidewalls and does not touch the bottom of the groove. It follows the modulation faithfully, does not respond to normal surface scratches, and affords the best tracking.

The commercial fine-groove records (45 rpm and 33⅓ rpm) have a groove of a slightly different shape and much smaller dimension, and the best condition is obtained when played with a 1 mil needle. (See chapter 6.)

In order to afford the greatest record economy and to make possible a full 15 minute program on a 10 inch disc, the Model 4DR cuts 160 lines per inch. This makes for a distance of .00625 inch, or 6.25 mils from line to line. If the width of the land is equal to the width of the groove, we now have a groove width of 3.125 mils. Fig. 5-3 shows such a groove cut with a stylus having an 87 degree included angle. The same figure shows the relative fits of a 1 mil and 2.7 mil reproducing needle in this groove.

Since the line spacing and the recording stylus remain the same regardless of the recording speed, it follows that the recordings made on this instrument should always be reproduced with a 1 mil needle if the best results are to be obtained.

The smaller the needle, the less will be the surface area contacted in the groove. Therefore, in order to keep the wear to a minimum, home recordings should always be reproduced on instruments having a needle pressure not over 10 grams.

Since instantaneous recordings are of necessity made of softer material than commercial recordings, they are naturally subject to rapid wear. For this reason they should always be played with a needle that is known to be in perfect condition. The needle should be examined frequently with the aid of a glass, and discarded when any great wear becomes visible or when the point is no longer symmetrical.

Unlike the recording head, the crystal cartridge is a fragile and delicate device. It is easily and permanently damaged by extremes of high temperature and humidity. Temperatures above 120 degrees fahrenheit are very harmful to the crystal element. (See Chapter 4). For this reason the unit should not be exposed to direct sunlight nor placed over or too near radiators.

Neither should the unit be operated with the lid closed. Considerable heat is generated within the unit which cannot be properly dissipated when the cover is in place. This trapped heat may damage the cartridge.

Recording Head

The recording head is the low impedance magnetic type. Its construction is very rugged and it is not seriously affected by adverse temperature or humidity.

With normal care it may be expected to give several years of satisfactory service and generally will need to be replaced only after the dampers have oxidized so as to impair the frequency response.

To remove the head: Raise the cutter arm to a vertical position. Remove the stylus clamp screw. Place a thumb on the balance spring and apply sufficient pressure to cause the head to swing out. Grasp the head and pull so as to stretch the balance spring along its axis so that the head may be swung out from its support bracket. Release pressure and unhook the spring. Lead wires should be disconnected at their junctions beneath the motor board. However, the careful and experienced serviceman may disconnect the lead wires from inside the head by removing the cover which is held in place by the two "flat head" screws which are visible beside the stylus chuck in Fig. 5-4B. Installation is made in the reverse order of the removal. Replacement should be made with *Astatic* M-41-10 magnetic cutter.

Microphones—Placement and Use

Microphones in general, as far as sensitivity is concerned, may be divided into two classes: (a) high level, and (b) low level. Ordinarily quality microphones will be found to fall in the low level classification. The crystal microphone supplied with this unit is a high quality low level type. The single button carbon type with transformer and battery and the contact microphones are high level microphones. Other microphones are discussed under "External Input" and in Chapter 14.

The microphone supplied with this unit is of the unidirectional type and has a normal "live" area over an angle of approximately 120 degrees. For speech recording the person should be 12 to 18 inches from the microphone and directly in front of it. This distance may be varied in accordance with the relative strength of the speaker's voice. For speakers with an excessive sibilance, the microphone should be turned to such an angle that the characteristic is not picked up by the microphone.

The speaker should generally use an average voice level, but this is a flexible rule as the final dramatic and tonal effect obtained will depend greatly on the loudness and expression of the speaker's voice. The speech should be projected in the manner desired, as addressing an audience, a personal conversation, etc., but an effort should be made to control emphasis by the speaker's expression rather than by changing the loudness of the voice. The loudness should never be greatly increased, as distortion and overcutting will result. For the average speaker, the lower the voice volume, the more bassy the reproduction. Various other tonal effects may be obtained by speaking into hollow receptacles or over the strings of an instrument such as a piano or guitar, or by simply holding the nose.

For solo performers or very small groups, the microphone should be at the same height as the speaker's mouth. This may be accomplished by letting children stand on chairs or by letting taller persons sit down, etc. For larger choral groups, etc., the microphone should be suspended somewhat above and well in front of the group and a few persons, representing each type of voice, should be brought nearer the microphone so that the words will be understandable when the record is played back.

Orchestras and bands should be arranged conventionally with the micro-

phone in front of the group and far enough away that all the instruments are in its "live" area.

The piano is probably the most difficult instrument to record faithfully. Since few home recordists have neither the desire nor the facilities for duplicating the elaborately conditioned studios used by broadcasters and commercial outfits, some experimenting should be done to determine how to obtain the best results from the facilities at hand. A recording of a piano may not be faithful even when the recording is made in a room which is heavily carpeted and has heavy draperies. This is because the microphone does not hear the same as the human ear and will be aware of room reverberations which the average ear would not notice.

The best piano recordings are generally obtained with the microphone at a distance of 10 feet or so and placed on the right hand or treble side of the open piano. If a singer is to also play the accompaniment, the microphone must be brought sufficiently near the singer, and the piano should be closed and played softly. Never place the microphone on the piano. In some instances good solo results have been obtained by suspending the microphone inside the piano. Where acoustics are extremely poor, the contact microphone is recommended. Instructions for attachment to the piano will accompany the unit. Since the contact microphone is a high level device, it may be plugged into the external input jack. The regular microphone may then be used to pick up voices, and the proper mixing may be accomplished by use of the recorder controls.

Making Copies

When some interesting or important event has been recorded, the request for copies is often received from friends and relatives, etc. Copies can be made from any good record, including commercial pressings. Copies may be made from the original until it is so worn that the quality has been impaired.

The making of copies involves the use of a high quality phono-reproducer. The original record is played on this phonograph, and the output of its pickup is fed into the external input jack of the recorder. The copy is then cut the same as for normal recording with any external input.

This same process is used when a person wishes to make a record of one's-self playing or singing both parts of a duet. A recording of one part is made in the usual manner. A copy of this record is then made, and the second part is mixed in as the copy is being cut.

Copies of good recordings may be expected to have fair quality, but the average home recordist should avoid making copies of copies. Professionals mix and dub many copies, but with the aid of elaborate equalizing and filter networks.

It is possible to get the single person duet effect on the recorder without the aid of additional equipment. Record one part of the duet on a portion of the useful space of a 10 inch disc. Play a portion of this back with the selector switch in the "Record" position so that the volume control may be set to give the proper recording level. Move the cutting head to the uncut portion of the disc. Start the turntable and lower the cutting stylus. Place the playback arm on the record so as to play the first part, and the second part of the duet is then performed by the artist. Many novel and ingenious combinations are thus made available which will add much gaiety to parties, etc.

Patterns on Records

Every now and then a recording made on home type recording equipment will have some visible geometric pattern when held properly to the light. This pattern may be a moire effect or may be in the form of spokes, either curved or straight. Bent or dented discs will have spots of heavy or light cutting, and may even have areas where the cutting stylus has failed to touch the record.

Observation will show a bent or dented disc, so we shall here discuss only the moire and spoke effects. While a slight pattern is of little concern to the average home recordist, a heavy pattern will cause distortion and tracking failure.

Patterns of a regular geometric nature are seldom caused by the recording discs. However, discs with hard spots, swirls or orange peel effect may aggravate an existing condition so that one type of disc may have a heavier pattern than another type.

Vibration of the turntable is a common source of pattern. This may be caused by the turntable not being properly seated on the spindle, bent or damaged feed screw, flat spots on the idler wheels, foreign matter in the drive mechanism, oxidized or improper motor supports or worn motor bearings. With proper lubrication the latter will never occur. Special attention should be paid to keeping particles of the thread out of the drive mechanism. The thread may adhere to the inside rim of the turntable or to the idler wheel. Just a single thread across an idler wheel will result in a thumping noise as the turntable revolves and may result in a pattern.

Flat spots on the idler wheels are caused by the pressure of the spring holding the wheel against the motor shaft during long periods of idleness. These flat spots may be avoided by placing the bakelite spacer bar between the hub of the top wheel and the motor shaft when the instrument is to remain idle for some time. Worn or smooth (glazed surface) drive wheels should be promptly replaced.

It should be noted when replacing these idler wheels that they are not directly interchangeable. The 33⅓ rpm wheel has a shoulder on the hub while the 78 rpm wheel has a smooth hub.

Pattern may also be caused by too deep cutting or by a stylus that is loose in the cutting head.

To sum up the pattern effect, it can be said that the best way to avoid pattern is to keep the equipment in first class mechanical condition, cleaned and properly lubricated.

Care of the Record

Most records, when cut on high quality blanks, may be kept indefinitely, and will give satisfactory reproduction through hundreds of playings when properly cared for.

Beyond careless abuse, the greatest single record enemy is dust. Home recordings just naturally collect dust because in the cutting process a static charge is developed which is held for a long period of time. The static charge is the principle of many commercial dust collectors. This dust on the records acts as an abrasive, and damages both the recording and the reproducing needle. To minimize dust, always store your recordings in suitable envelopes or albums.

When a record has collected dust, it should be washed under the cold water faucet and dried with a lint-free cloth.

Never use record preservatives or lubricants. They are great dust collectors. Never play home recordings with a heavy pickup. Use only light weight pickups equipped with a 1 mil needle of the so-called permanent type. Never use steel, cactus, thorn or fibre needles. Always store records on edge. Do not store in piles. Store your records in rooms where you live. Avoid storage in excessively hot or cold, dry or damp rooms. Records keep best under climatic conditions most healthful to you.

Lubrication of the Home Recorder

Frequent lubrication of the mechanism is not required. A miserly application of oil every four to six months will serve to maintain the equipment in good condition.

1. Remove the turntable by raising up on the outer rim while the center spindle is being tapped with an object such as the handle of a heavy screw driver.

2. Oil the upper motor bearing by letting four or five drops of oil run down the side of the motor shaft. Use

pure mineral oil SAE No. 10. Apply this oil to the motor shaft and not to the drive bushing where it may later transfer to the rubber rims of the idler wheels.

3. Remove the top idler wheel by pulling the hair pin cotter. Lift up on the wheel, paying attention to the felt washer which should first be removed.

4. Loosen the set screw in the off-set idler shaft and remove the shaft.

5. The lower idler wheel may now be removed and the base plate around and under the idler shaft should be thoroughly cleaned, but not oiled.

6. Replace the idler wheels in the reverse order of their removal, applying one or two drops of oil to each bearing. A larger amount of oil may work its way to the outer edge of the wheels and cause deterioration of the rubber rims. In replacing the off-set idler shaft, make certain that the point of the set screw is properly seated in the cavity provided, and tighten it firmly.

7. The lower bearing on the motor should be oiled in the same manner as the upper bearing by applying oil to the shaft so that it will run into the bearing.

8. The pivot post may be lubricated occasionally by applying a small amount of petroleum jelly to the post while the cutter arm is raised. This should then be worked into the bearing by raising and lowering the arm while it is swung to and fro horizontally. Any excess lubricant should always be wiped off.

9. The lateral feed screw and center spindle worm and bearings are packed with a life time supply of high grade mineral oil, and will probably never need attention. Should this assembly need to be taken apart for any reason, read the appropriate paragraph under "Engagement and Adjustment of Feed Screw" for the correct procedure.

10. Never apply any type of lubricant to the lateral feed screw. However, see that it is absolutely clean.

Specifications of Meissner 4DR

Power Supply: 110-120v. 60 cycles.

Power Consumption: Amplifier 30 watts, motor 35 watts, 65 watts total.

Frequency Response: 100 to 4500 cps.

Power Output: 2 watts at less than 2% distortion.

Lines cut per inch: 160.

Tube Complement: 6SJ7 microphone preamplifier, 6SL7GT audio amplifier, 6V6GT audio output, and 6X5GT rectifier.

Playback: Will play home-cut or commercial records to and including 12″ at speeds of 78, 45 or 33⅓ rpm.

Record: Will record on any slow-burning home type disc to and including 10″.

Playback cartridge: Crystal. Low pressure (10 gram) Twin Tilt with replaceable needle. *Electro-Voice* Model 16-0.

Recording Head: Magnetic type with 10 ohm impedance (*Astatic* Model M-41-10). Use short shank stylus having included angle of 60 to 87 degrees.

Input: External input jack. Input impedance 250,000 ohms. Signal may be from any high level source of 1 to 10 volts, and may be mixed with input from microphone. Shielded input cable supplied.

Microphone: High quality low level crystal with standard connections. Separate microphone gain control.

Speakers: Two 5″ permanent magnet

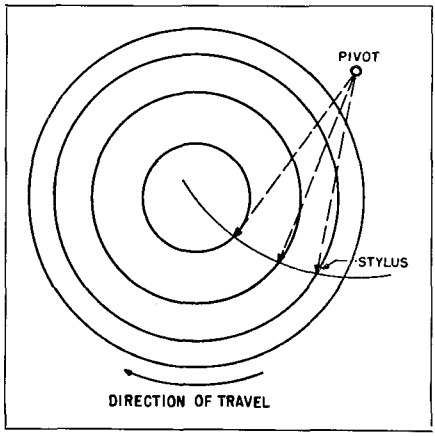

Fig. 5-5. Essential motion of the turntable of the typical home recorder.

type built-in. Impedance 3.2 ohms each. Series connected and phased. Left speaker resonant at 160 cycles. Right speaker resonant at 220 cycles. External jack for plugging in 6-10 ohm remote speaker.

Volume Indicators: Neon *GE* T-2.

Professional Disc Recorders

Recorders for standard or microgroove originals for broadcast and other professional applications are precision instruments. Almost without exception these employ overhead feed screw mechanisms to guide the cutter across the record blank. Unlike the home recorder cutter drive, Fig. 5-5, professional machines maintain a constant tangency of the cutting stylus to the record groove as shown in Fig. 5-6. Instead of swinging in an arc as in Fig. 5-5, the stylus face retains a fixed position with respect to the direction of and to the angle of the groove as in Fig. 5-6. Heavy duty motors, precision cut gears and more positive drive distinguish the professional machines to be described.

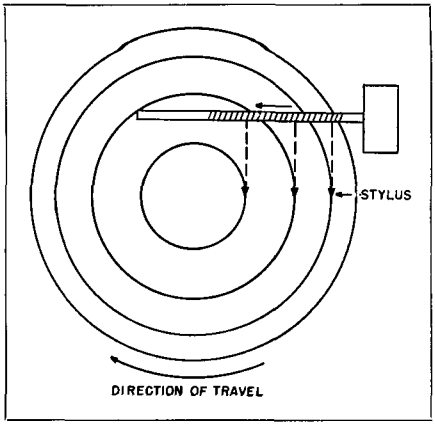

Fig. 5-6. Professional type drive mechanism maintains perfect tangency to the groove.

RCA 73B Professional Recorder

This recorder is designed with essential features (Fig. 5-7) for versatile control of cutting to meet almost any recording situation. Equipment consists of a high quality M1-11850-C recording head (cutter) with its associated carriage and feed screw mechanism, a turntable assembly which in-

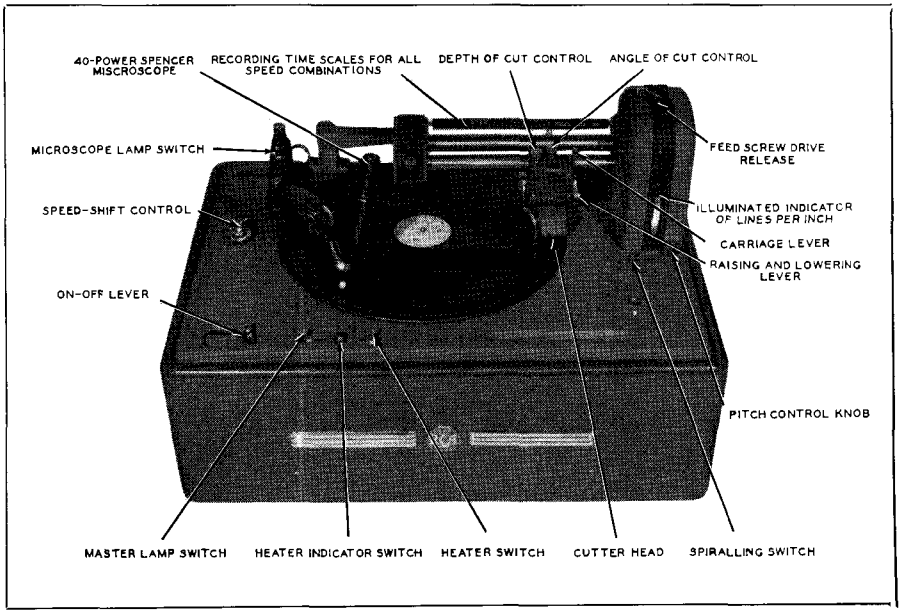

Fig. 5-7. Over-all view of RCA 73-B Professional recorder showing principal operating components. (Courtesy, RCA)

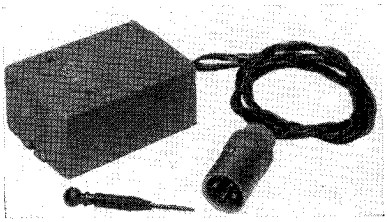

Fig. 5-8. The RCA MI-11850-C Professional recording head.

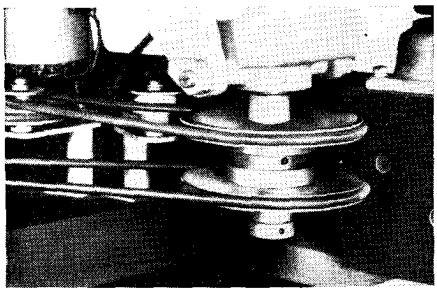

Fig. 5-9. A portion of the RCA conversion for microgroove.

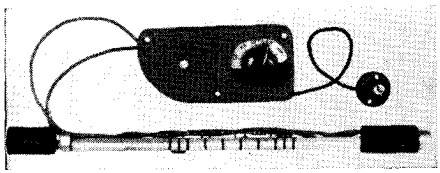

Fig. 5-10. RCA automatic recording equalizer type MI-11100-A.

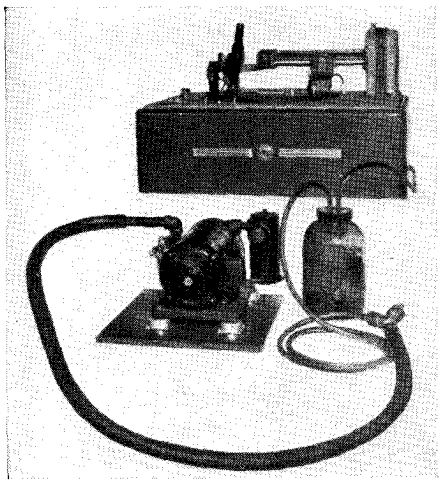

Fig. 5-11. RCA type RS-1A recording suction equipment.

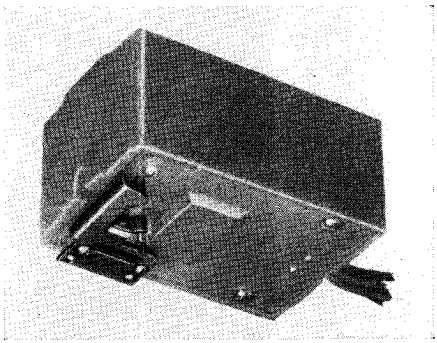

Fig. 5-12. Advance Ball Kit RCA MI-11851. (Courtesy, RCA)

cludes dual motors with rim drive mechanism, a turntable platter with rubber mat, a microscope and lamp and a suction nozzle (less suction equipment) for removing acetate shavings from the record.

The MI-11850-C recording head, Fig. 5-8, is a high quality, precision built, magnetic type unit with a frequency response which does not depart from an ideal frequency response curve by more than 2 db. between 30 and 10,000 cycles per second. Any discrepancies caused by temperature variations are eliminated by the self-contained heater and thermostat. A visual indicator controlled by a switch on the base indicates when the heater is in the circuit. Design features include an improved lowering device to prevent stylus damage and overcutting. Start and finish spiralling is controlled by a separate motor (push button operated). Spiralling pitch is approximately 14 lines per inch at 78 rpm and 6 lines per inch at 33⅓ rpm. Changes from "inside-out" to "outside-in" are made by turning a knob and without changing belts, feed screw or driving gears. The pitch is adjustable, while cutting, from 96 to 152 lines per inch. A modification kit, MI-11882, permits fine groove recordings up to 300 lines per inch (Fig. 5-9). Stylus angle and depth of cut are adjusted while cutting. An automatic equalizer, MI-11100A, available as an accessory (Fig. 5-10) compensates for high frequency loss at the inner record

diameters. Other accessories include suction (Fig. 5-11) equipment, RS-1A, consisting of pump, chip collector and hose. An advance ball kit, MI-11851, for use with the MI-11850C recording head when making wax recording (Fig. 5-12) is available. The wiring diagram for the 73B is shown in Fig. 5-13.

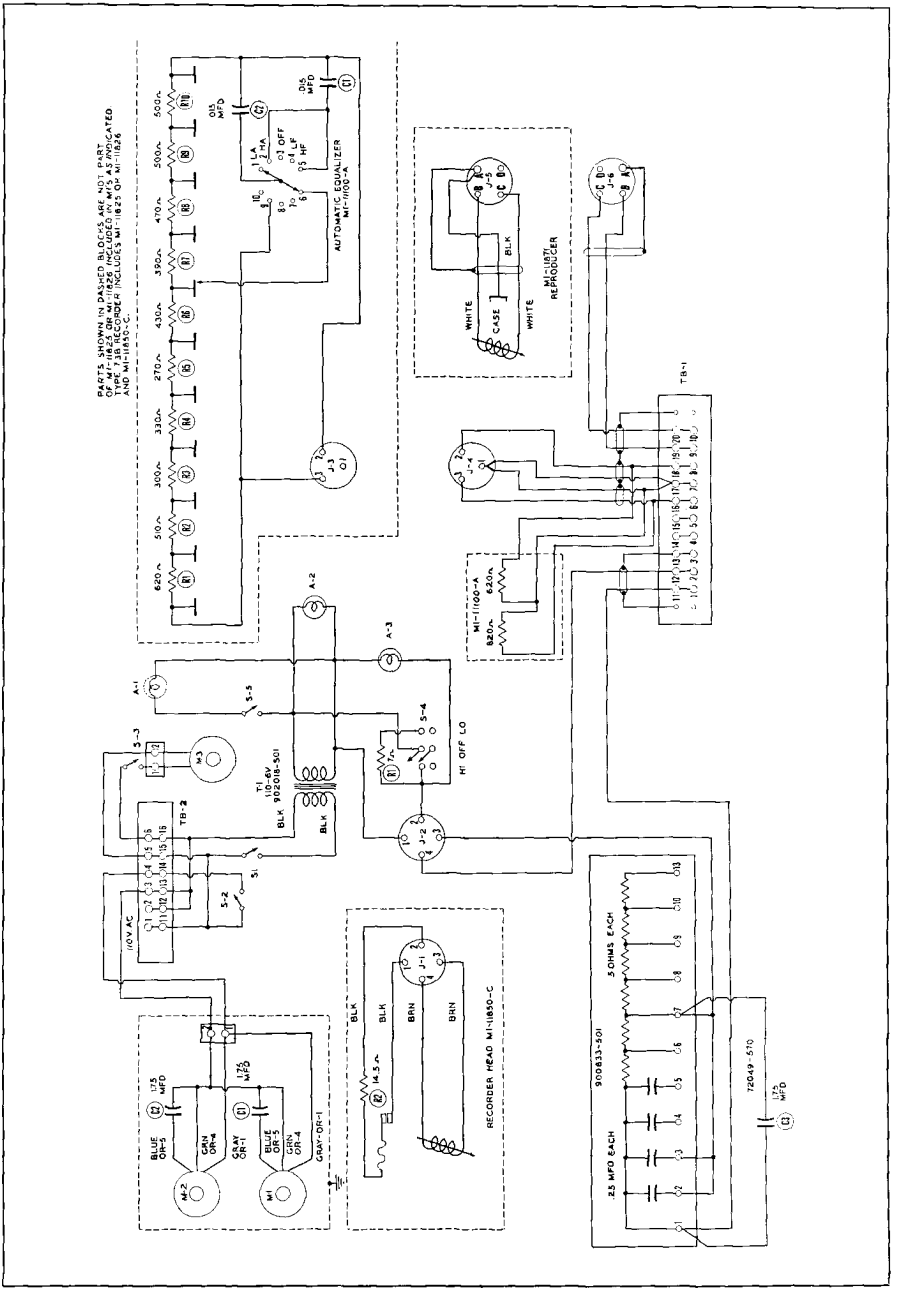

Fig. 5-13. Wiring diagram of components in the 73-B disc recorder.

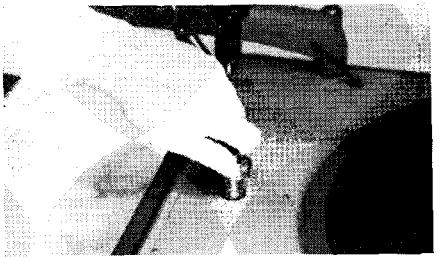

Fig. 5-14. Speed change is accomplished by operating disc control knob.

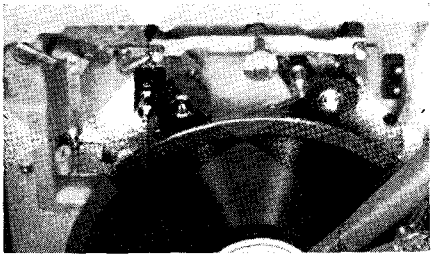

Fig. 5-18. The brake shoe moves away from turntable rim and the idlers are now in contact with the drive wheel in the "on" position.

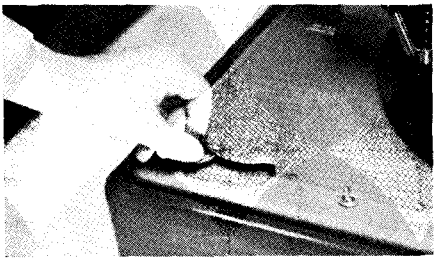

Fig. 5-15. A single "off-on" lever controls both synchronous turntable drive motors.

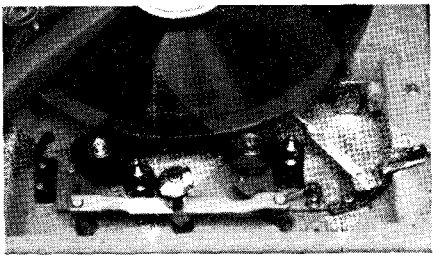

Fig. 5-19. Shows the position of the idlers with speed change knob "up" at 33 1/3 rpm.

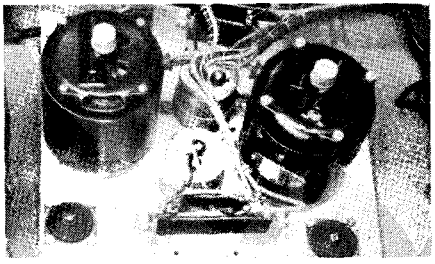

Fig. 5-16. Two hysteresis type motors rim-drive the turntable through rubber idler rollers.

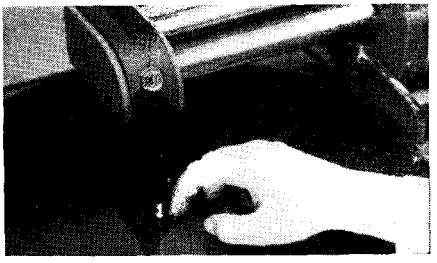

Fig. 5-20. Record drive pin comes up into position when this plunger-release button is pressed.

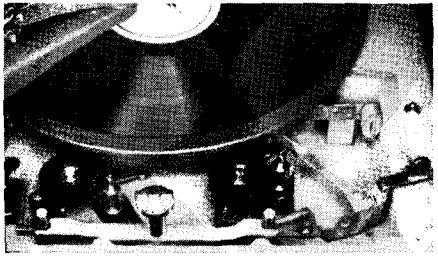

Fig. 5-17. A brake shoe is applied to the turntable rim and rubber idlers are removed from contact in the "off" position.

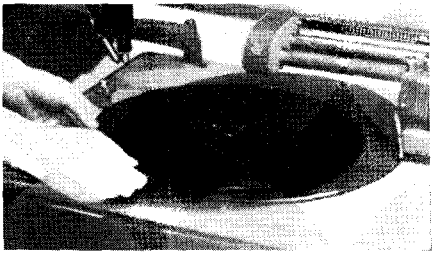

Fig. 5-21. Recording blank is here being placed in position and engages drive pin.

(Courtesy, RCA)

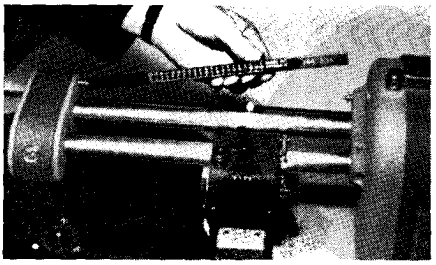

Fig. 5-22. Calibrated time scales permit proper selection to agree with "pitch" setting.

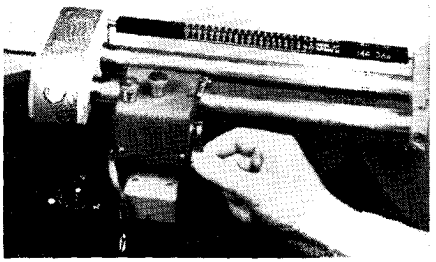

Fig. 5-24. Cutter-head is raised or lowered by this lever and permits gentle action.

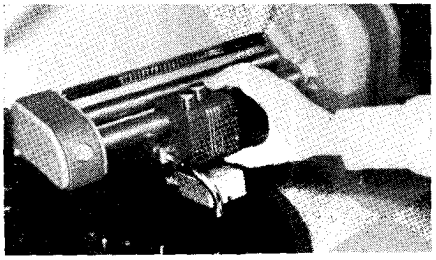

Fig. 5-23. Carriage lever is being pressed to permit movement of record-head horizontally over the record to desired cutting position.

Fig. 5-25. Angle and depth of cut are controlled by these two knobs atop the carriage.

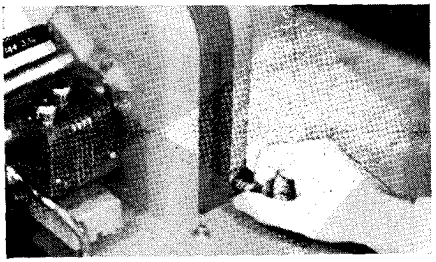

Fig. 5-26. Adjustment of pitch is made by this conveniently located control knob.
(Courtesy, RCA)

SPECIFICATIONS

Recorder Head Impedance (MI-11850-C High Fidelity Head)	15 ohms nominal
Frequency Response	± 2 db., 30-10,000 cps
Sensitivity: (Groove velocity 6.3 cm/sec., .00079" (peak to peak) at 1000 cps)	+ 30 dbm. (1.0 watt)
Stylus	Sapphire or steel
Turntable Diameter (handles blanks up to 18¼" dia. and up to ⅜" thick)	17½"
Turntable Drive	Rim driven through rubber idler rollers from two hysteresis synchronous motors

Turntable Speed (accuracy ± ½%)	33⅓ or 78 rpm
Speed Regulation (wows)	0.14% rms at 33⅓ rpm 0.07% rms at 78 rpm
Recording Direction (adjustable)	Inside-out and Outside-in
Recording Pitch	Continuously variable 96 to 152 lines per inch with detents provided in steps of 8 lines per inch.
Stock Identification	MI-11827

ACCESSORIES

Automatic Equalizer	MI-11100-A
Orthacoustic Equalizer	MI-4916-A
Suction Equipment	MI-11857
Spare Chip Collector and Hose Assembly	MI-11858
Sapphire Stylus	90° MI-4878-D 70° MI-4842
Steel Stylus	MI-4879-A
Amplifier (BA4C)	MI-11223-B
Universal Pickup Kit (for 73-B Recorder)	MI-11871
Additional High Fidelity Recording Head	MI-11850-C
Fine Groove Recording Conversion Kit	MI-11882
Standard Cutter Head	MI-11853
Advance Ball Kit for MI-11850-C Recording Head	MI-11851

Disc Recording Filters

The development of special filter networks for use with the MI-11850-C cutter results in characteristics almost identical when measured at 78 or at 33⅓ rpm and are described in the following text.[1]

The frequency-response characteristic standardized by the *National Association of Broadcasters* for lateral disc recording is based upon a cutter characteristic having a transition frequency of 500 cycles. The NAB standard curve, Fig. 5-27, includes high-frequency tip-up having the characteristic shape of a resistance and capacitance network of such proportions that the time constant $T = RC$ is equal to 100 microseconds (R expressed in ohms; C, in farads). Some additional low-frequency boost, below 100 cycles, is also included, as illustrated by the flatness of the curve between 100 and 50 cycles. If we subtract the 100-microsecond tip-up curve from the standard and extend the low-frequency response on a 6 db. per octave slope, we then have the characteristic of the ideal cutter—Fig. 5-27. Extensions of the constant-velocity and constant-amplitude portions of the curves intersect at 500 cycles, which is designated as the crossover point.

Cutter Design

The ideal curve shows some rounding off at the crossover frequency. This is desirable from the cutter-design standpoint and also for design of the playback filter, since an abrupt change in response characteristic is difficult to obtain both mechanically and electrically. The crossover frequency of the cutter is determined by the resonant

[1]H. E. Roys: "Crossover Filter for Disk Recording Heads" Broadcast News, June, 1949 pp. 20-23.

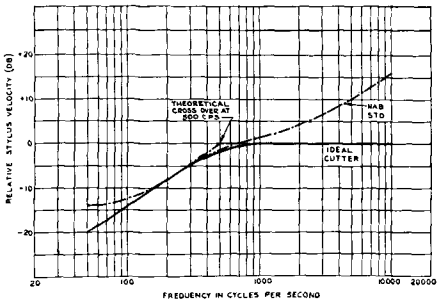

Fig. 5-27. NARTB Standard lateral recording characteristic and ideal cutter curve with crossover point at 500 cycles.

frequency of the mechanical system comprising the effective mass of the moving system and the effective stiffness of the centering means. Below resonance the mechanical system acts like a spring—constant applied force results in constant armature deflection —and hence the lower frequencies are recorded at equal amplitude. Above resonance the system is mass controlled and constant applied force results in decrease in amplitude of deflection inversely proportional to frequency, or the motion becomes constant in velocity. Mechanical damping is used to control the height of the resonance peak, and usually enough damping is included to obtain a smooth characteristic which is rounded off at the transition point between constant-amplitude and velocity portions. With the moving iron-vane type of cutter, it may be difficult to obtain as low a crossover frequency as wanted by decreasing the resonance frequency, either by increasing the armature mass or decreasing the centering stiffness, or both, without encountering instability. The effect of the steady magnetic field provided by the permanent magnet is to act in opposition to the centering spring and attract the armature to the nearest pole piece. If the attraction is too great, centering of the armature becomes uncertain, and hence it becomes undesirable to carry this means of lowering the crossover frequency too far. Increasing the armature mass is not a desirable solution either where wide-range and maximum sensitivity (minimum driving current) is wanted, since both of these requirements call for low mass.

Crossover Filter Design

An electrical network is a practical means of obtaining the crossover at the desired frequency and has the advantage that additional controls can be easily included for adjusting other portions of the range. A typical response characteristic of the MI-11850-C recorder while cutting lacquer is shown in Fig. 5-28 and if we take the difference between this and the ideal curve, we have the desired filter characteristic, Fig. 5-28C. Analysis of this curve shows that a tuned circuit resonated at about 500 cycles will be needed and that the drop off above resonance must occur at a faster rate than it does below resonance. For one octave above 500 cycles, or 1000 cycles, the required response has dropped 3 db., whereas for an octave below 250 cycles the required reduction is only about .3 db. This indicates that a circuit which will put a dip into the curve at about 1000 cycles is necessary. In order to equalize the response above 1000 cycles, a network which will put a rather broad hole in at about 4500 cycles is also needed. Response curves for a number of different cutters showed that the same type of filter characteristic was necessary, although the degree of compensation was different in each case. The filter circuit finally arrived as is shown in Fig. 5-29.

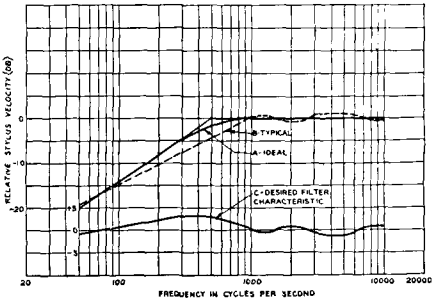

Fig. 5-28. Curves showing A (ideal cutter characteristic) B (typical response of MI-11850-C recording head) C (difference between A and B which gives the desired filter characteristic).

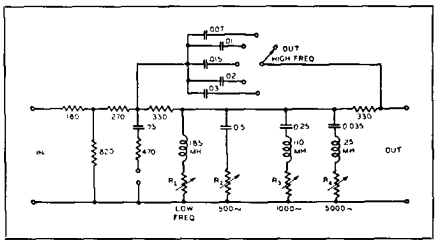

Fig. 5-29. Circuit diagram showing the final filter design.

It is designed for operation ahead of the amplifier driving the cutter and the input and output impedance is rated at 600 ohms. Input and output impedance characteristics are shown in Fig. 5-30 for a typical filter setting. The variation of the input impedance is slight, so that a number of filters can be bridged across a program line, using bridging transformers or bridging pads without greatly altering the line impedance. A greater variation in output impedance can be tolerated since the outputs go to individual amplifiers and are not connected together.

In many cases it is desirable to provide some high-frequency boost, and this is accomplished by connecting capacitors across the two 330-ohm series line resistors. It is also advantageous to have adjustable resistors in series with the capacitor and the inductance of the 500-cycle parallel tuned circuit. By having individual resistors, control of the response at the extreme low frequencies is possible without greatly affecting the boost at 500 cycles or the characteristic at the higher frequencies. Likewise, the variable resistance in series with the capacitance permits independent control at the higher frequencies. Variable resistors in the series circuits, which are tuned to 1000 and 5000 cycles, provide the necessary adjustments required at these frequencies.

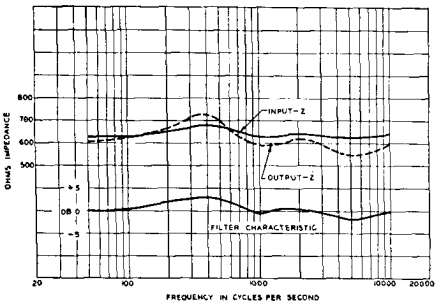

Fig. 5-30. Input and output impedance characteristics of the crossover filter for typical filter adjustments.

Typical Operating Characteristics

A number of cutters were selected and tried, several of which had not received final factory adjustments so that their characteristics were outside of normal limits. This was done in order to check the adequacy of the filter characteristic and range of the adjustments.

The results obtained with one of the cutters which had not received final adjustments is shown in Fig. 5-31. The cutting characteristic Fig. 5-31A, was first measured with the aid of the FM calibrator while cutting a lacquer, and the desired filter response, Fig. 5-31B, then determined. Adjustments to the filter were made using an oscillator and response measurements with the filter in place obtained while cutting lacquers at both 78 and 33⅓ rpm, see Figs. 5-31 C and 5-31D. Since, as stated before, this cutter had not received final adjustment and the characteristic was not normal, it was found impossible to obtain a smooth, flat response throughout the high-frequency range, but it is believed that the characteristic shown would be acceptable in most cases.

The same tests were repeated with another cutter whose characteristic was more nearly normal, and a much smoother response characteristic was obtained, see Fig. 5-32.

It is interesting to note that the characteristics measured at 78 are almost identical with those obtained at 33⅓ rpm. A groove width of 6.5 mils was used for 78 rpm, since a larger playback stylus having a tip radius (3 mils), is normally used for such records, whereas for 33⅓ rpm recordings, the groove width is narrower (about 4.5 mils) which is wide enough to accommodate a 2.3-mil tip normally used

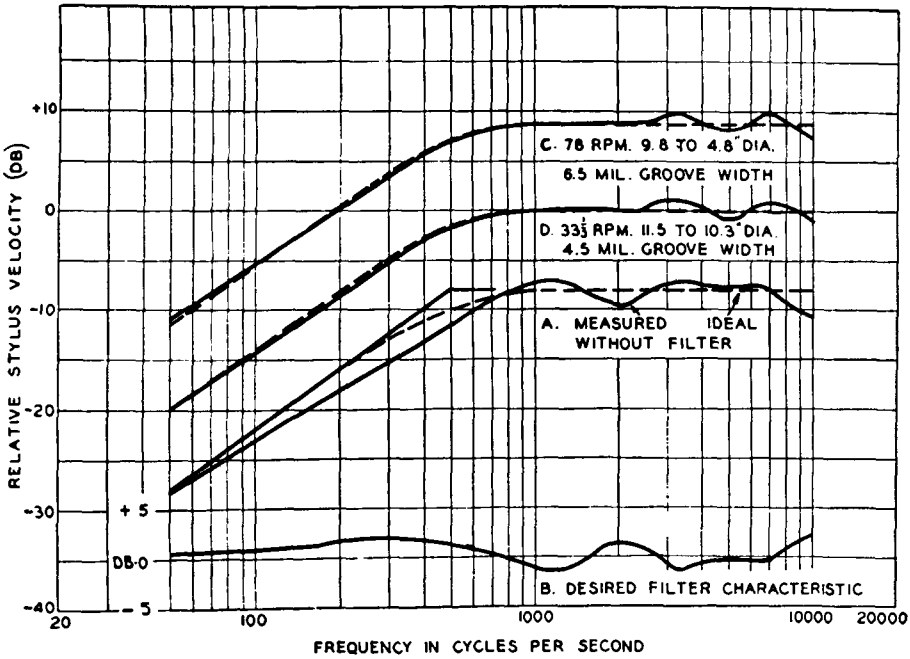

Fig. 5-31. Curves showing: A (cutter response without filter) B (desired filter characteristic) C (cutting characteristics with filter at 78 rpm) D (cutting characteristics at 33 1/3 rpm).

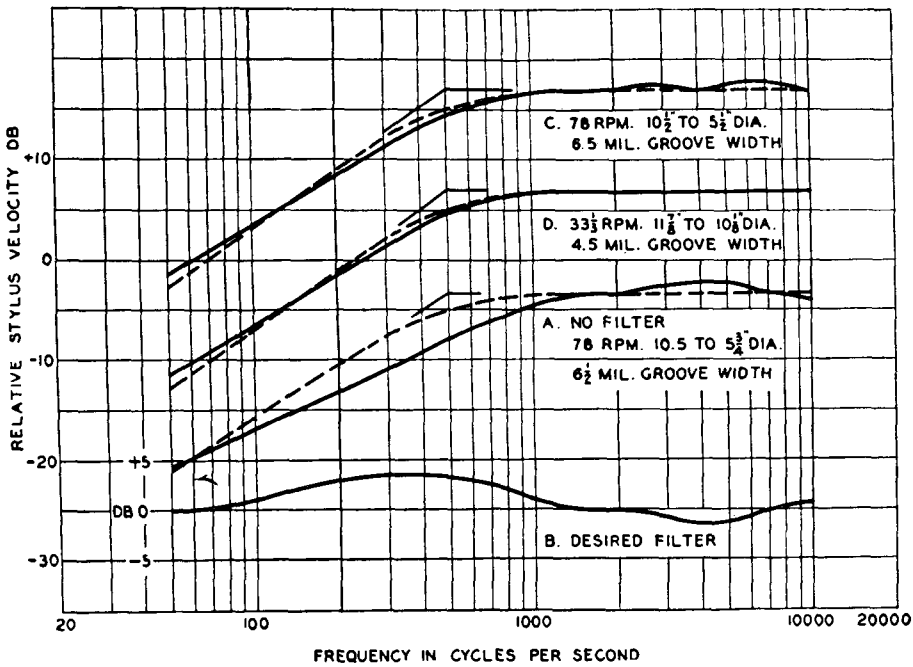

Fig. 5-32. Characteristics of another cutter without and with filter adjusted for proper crossover and smooth response.

for transcription service. These tests indicate that the filter need not be adjusted for different turntable speeds under normal operating conditions.

Another cutter was set up, and after suitable filter adjustments, a series of response measurements was made. These results are shown in Fig. 5-33. The lacquer recording stylus does not have sharp cutting edges like the stylus used for recording in wax, instead the edges are polished at a slight back angle in order to form a smooth surface for pushing the material aside in order to burnish and polish the sidewalls of the grooves. (See Chapter 7). Such burnishing produces grooves which are very quiet in playback. This method of shaping the stylus has become an accepted practice for lacquer recording. The burnishing surface puts some lateral load on the recording head while cutting, which has been investigated.[2] The high frequency loss chargeable to the burnishing[3] is difficult to separate from the loss due to springback or cold flow of the recording medium. Since the loss is variable depending upon the recording stylus as well as the medium, it is thought unwise to attempt to correct for it in the recording head. The only justifiable requirement that can be imposed upon the recording head is that for the same input level the stylus should move the same amplitude at the inside of the disc as it does at the outside. A cutter of the true feedback type where the feedback voltage is derived from the motion of the stylus could do no better than this. Since the curves in Fig. 5-33 show no appreciable change in stylus motion when cutting at different diameters, it appears that another means of controlling the high-frequency loss encountered during the cutting of lacquers must be observed. Stylus and

[2]H. E. Roys: "Experience with an FM Calibrator for Disk Recording Heads" J. Soc. Mot. Pict. Engrs., Vol. 44, No. 6 (June 1945) pp. 461-467. Broadcast News, Vol. 43, June 1946.

[3]C. J. LeBel: "Properties of the Dulled Lacquer Cutting Stylus" J. Acoust. Soc. Amer., Vol. 13, No. 3, Jan. 1942, pp. 265-273.

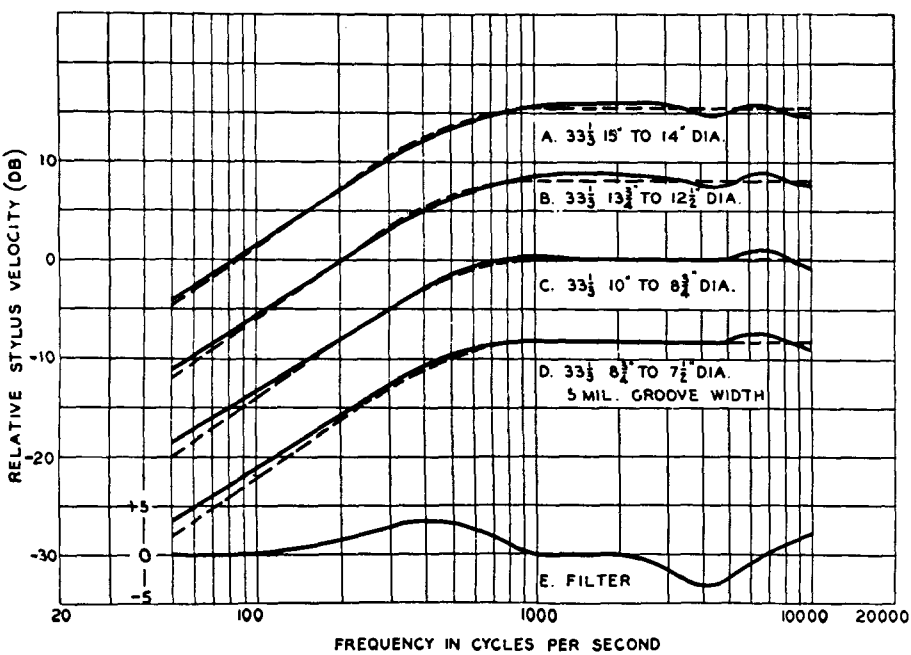

Fig. 5-33. Response characteristics at different recording diameters at 33 1/3 rpm.

lacquer selections are possible means, and recording with increased high-frequency tip-up at small recording diameters is a practice that has been in use for many years. In fact, most lacquer recording machines constructed today provide for an attachment such as the RCA MI-11100-A, which will progressively raise the level of the high frequencies as the recording diameter is decreased. See Fig. 5-10.

Calibrating the Cutter

If an FM calibrator, or a similar device for measuring the amplitude of stylus motion, is available, adjustment of the crossover filter is not difficult. A recording characteristic is first obtained without the filter, the desired filter characteristic is derived, and the filter adjustments made with the aid of an oscillator. Cutting measurements are then taken and minor adjustments made, if necessary. If an FM calibrator is not available, the cutting characteristic should be obtained while recording at 78 rpm so that a suitable light pattern can be obtained. As is well known, the width of the reflected light pattern is constant for constant velocity of recording[4-5], so that this method may be applied for all frequencies above 1000 cycles. For frequencies below 1000 cycles, the recorded lacquer should be played back and the output readings compared with those obtained from a calibrated frequency record.

When making light-pattern measurements with the MI-11850-C recording head, it is recommended that 5000 cycles be used as the reference frequency. Measurements have shown that the variation at this frequency due to

[4]G. Buchman and E. Meyer: "A New Optical Method of Measurements for Phonograph Records" Elektrische Narchrichtentechn, Vol. 7, pp. 147-157, April 1930, translated by J. M. Cowan, J. Acoust. Soc. Amer., Vol. 12, pp. 303-306, October 1940.

[5]B. B. Bauer: "Measurement of Recording Characteristics by Means of Light Patterns," J. Acoust. Soc. Amer., Vol. 18, No. 2, pp. 387-395, October 1946.

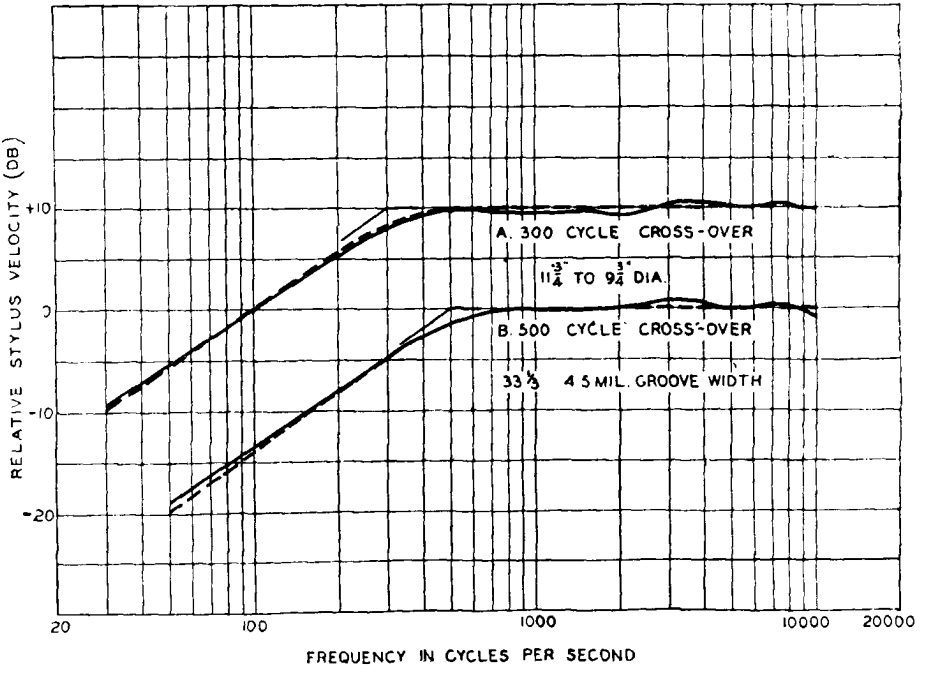

Fig. 5-34. Filter with additional network for 300 cycle crossover and comparison with the 500 cycle crossover adjustment.

stylus loading when cutting at different diameters is a minimum. This is due to the fact that 5000 cycles lies between the two resonant frequencies which are 1000 and 10,000 cycles, and this must be remembered when cutting at different diameters. After recording a short band at 5000 cycles, some other frequency as 1000 cycles, for example, should be recorded for a few grooves adjacent to the 5000-cycle band. If the width of the two patterns is not the same, level adjustments at 1000 cycles should be made, and a few more grooves recorded for observation. As a check a new 5000-cycle band should be recorded frequently so that finally the correct level is found for 1000 cycles as judged by equal width of the two patterns which are adjacent, or nearly so. Such procedure should be followed for each test frequency from 1000 to 10,000 cycles. Precautions should be taken to have the cutter at normal operating temperature before starting, and for accuracy it is well to apply program signal during warm-up and occasionally during calibration. See chapter 30, "Measurements."

Crossover at Lower Frequencies

Crossover at a lower frequency can be obtained by connecting a series capacitor and resistor across the line. By properly proportioning R and C, additional boost at the low-frequency end can be effectively obtained, and adjustments can then be made which will result in a crossover at a lower frequency. The curves of Fig. 5-34 show the results obtained with adjustments for 300-cycle and also 500-cycle crossover frequencies.

Presto Models 8D and 8D-G Recorders

The 8D recorder consists of a heavy cast iron base containing the motor and driving idlers, the turntable bearing and the multiple grooved pulleys controlling the cutting pitch. The overhead mechanism is a cantilever firmly supported at its right end and arranged to swing to the rear when changing

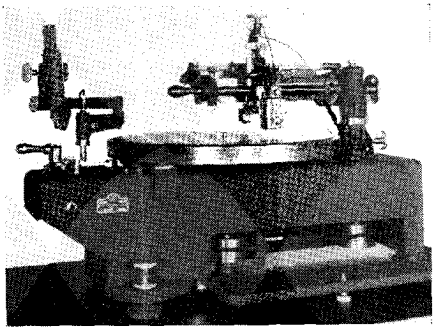

Fig. 5-35. The Presto Model 8D professional disc recorder. (Courtesy, Presto Mfg. Co.)

records. No contact with the turntable is required. The feedscrew, driven by a shaft passing up through the overhead assembly, has a built-in reversing gear for changing direction of feed. The 8D and 8D-G are identical except that the former is a rim driven type and the latter is directly gear driven at both 33⅓ and 78.26 rpm. The 8D is available (Fig. 5-35) less cabinet but the 8D-G (Fig. 5-36) comes with cabinet because the drive mechanism is mounted

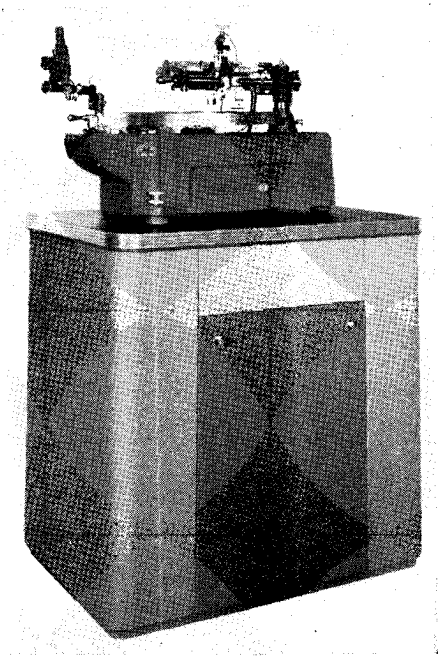

Fig. 5-36. The Presto Model 8DG cabinet mounted professional disc recorder. (Courtesy, Presto Mfg. Co.)

at the factory as an integral part of the whole assembly.

The 8D-G is equipped with a direct gear drive in place of the rim drive of the 8D. Separate motors are employed for 33⅓ and for 78.26 rpm and selection of speed is made by actuating a double-throw switch. The design of the transmission unit produces a mechanism of extreme accuracy which is very rugged and composed of unusually few parts. Microgroove recording is accomplished, with accessory items, for both the 8D and 8D-G. Fourteen feeds are provided—seven inside-out and seven outside-in. Both types are equipped with the 1-D cutter, 160-A or 161-A automatic equalizer and the 125-A microscope.

Specifications

Speed Accuracy: For 8D-G, no deviation from 33⅓ and 78.26 rpm. For 8D, within 0.5% at both 33⅓ and 78.26 rpm.

Pitch: Adjustable—88, 96, 104, 112, 120, 128 or 136 lines per inch, inside-out or outside-in with the same feed-screw. Microgroove optional at additional cost.

Noise Level: Mechanical noise originating in the 8D-G better than 50 db. below program level; in the 8D equipment better than 40 db. below program level.

Impedances: 1-D cutting head 500 or 15 ohms.

Frequency Response: 50-10,000 cps.

Power Requirements: Approximately 100 watts from a 115 volt, 60 cycle, single phase line. Motors are of the 1800 rpm synchronous type and are available for other voltages and frequencies.

Microscope: Magnification 40 power, area in focus—7 grooves, equipped with rigid cast aluminum mounting bracket and a special lamp for illumination of the grooves.

Operating Clearances: 8D-G overall clearance 35 x 23 x 53 inches (89 x 58 x 135 cm); 8D without cabinet 31 x 18 x 19½ inches (79 x 46 x 49 cm).

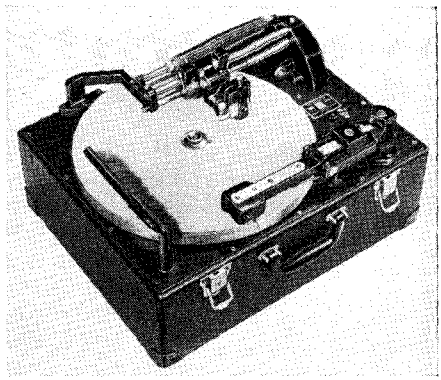

Fig. 5-37. The Fairchild portable synchronous recorder Model 539-G is trunk mounted. (Courtesy, Fairchild)

Fairchild 539 Disc Recorders

Direct synchronous drive meets all requirements for direct lateral recording on discs up to 17¼″ in size at 33⅓ and 78 rpm.

A cast panel and motor mount replace the usual lightweight panel found in many recorders. This sturdy, heavily ribbed casting brings to the Unit 539 Recorder the stability found in console models. It is so designed that it may be mounted in a trunk (Fig. 5-37) as a portable unit.

The entire recorder mechanism, mounted on the top panel casting, may be removed as a unit, if desired, and levelled up on its own legs on a bench or table for ease in making simple mechanical adjustments.

Vibration, noise and rumble are reduced by spring suspension of the 110/120 volt, 60 cycle synchronous motor which is dynamically balanced and quiet running.

Unit 541 Magnetic Cutterhead, which is standard equipment, provides a wide frequency range at high recording level with a low distortion content.

Unit 542 Lateral Dynamic Pickup, also standard equipment, matches the uniform frequency response and distortion-free quality of the Cutterhead. An unusual mounting method affords a near-uniform "floating" stylus pressure of 25 grams—even under unfavorable

playing conditions. Lateral drag is reduced by mounting the pickup head in the tone arm with cone ball bearings to further reduce distortion and record wear.

The 1800 rpm motor is synchronous. The drive, through center, is positive at 33.3 speed—obtained by a 54 to 1 gear-and-worm reduction of the motor speed. The only necessary interlocking device to other synchronous equipment is the ac line. The 78 rpm speed is obtained through a precision friction-ball-race step-up.

Evenness of speed is obtained by a carefully calculated loading of the drive mechanism to keep the motor pulling constantly; by careful precision control of all drive alignments that might cause intermittent grab and release and by carefully maintained .0002″ tolerances in all critical moving parts. Further aid to wow-free performance is provided by a perfectly balanced turntable with extra weight in the rim. The turntable clutch, which permits shifting from 33.3 to 78 rpm in operation, aids in smooth stopping and starting.

Another design feature permits the selection of any one of four standard NAB pitches: 97, 112, 120 and 136 lines per inch; either of two directions: IN or OUT; and either of two speeds: 33.3 and 78 rpm. Sixteen conditions in all are provided by one lead screw and its simple related mechanism.

Pitch is selected by snapping one of four gears into place for the four NAB pitches. Additional gears for 128 and 144 lines per inch are available on special order. An octagonal time scale is mounted back of the overhead mechanism. It is calibrated in minutes on separate scales for each pitch, speed and direction of cut. Depending on the pitch and speed being used, the octagonal drum is rotated until the proper scale appears under the pointer. The operator may read directly from the scale the minutes of recording completed and the time remaining.

Other design features permit . . . the disc to be placed on or removed from the turntable without disturbing the feed screw or carriage mechanism . . . a 90° rotation of the cutterhead for stylus adjustment . . . and separate levers for engaging the feed screw and lowering the cutterhead into operating position. This makes it possible to "close" the last groove when the recording is finished and to prevent any possible damage to the pickup.

A high quality microscope with light is mounted on the lathe mechanism to permit close observation of depth of cut and condition of groove at all times. A manually operated spiralling device is also standard equipment.

SPECIFICATIONS

Equipment Data and Dimensions

Turntable Speeds	78 and 33.3 rpm
Speed Accuracy	0.15%
Noise Level	44 db. below standard recording level of 2.5 inches per second stylus velocity at 1000 cycles per second.
Turntable Size	16″—clearance for 17¼″ discs
Dimensions and Weight in trunk	18″ x 22″ x 13″; weight 80 pounds
Dimensions—Cabinet Only	27″ x 23″ x 40″
Panel size	17″ x 21″
Panel Clearance	Below, 7″; Above, 6½″
Cutterhead Feed	Stationary overhead lathe type
Pitch	96, 112, 120 and 136 lines per inch
Direction of Cut	IN-OUT and OUT-IN

Drive.....Synchronous motor through gear and worm, for 33.3 rpm. Ball race step-up for 78 rpm.

Power Requirements.....110/120 volts, 60 cycles

Power Consumption.....100 watts

220 volts, 50 or 60 cycles and 110 volts, 50 cycles available.

STANDARD STOCK ASSEMBLIES

Code

UNIT 539-K1 RECORDER IN CABINET—Complete recorder mechanism including two-speed drive, 78 and 33.3 rpm; 16-inch turntable; overhead feed mechanism with adjustable pitch of 96, 112, 120 and 136 lines per inch cutting IN-OUT and OUT-IN; Unit 541 magnetic cutter-head with Unit 525 adapter; Unit 542 dynamic pickup with equalizer; 2.2 mil or 3 mil stylus tip; microscope; manual spiralling device; and connecting cables for attachment to *Fairchild* amplifiers .....VNGZF

UNIT 539-G RECORDER IN TRUNK—Complete recorder mechanism as described above less microscope and spiralling device.....VMFVC

Fairchild 523 Studio Recorder

The unit 523 recorder (Fig. 5-38) is designed to meet professional requirements for lateral recording on acetate or wax masters up to 18″ in diameter at 33⅓ and 78 rpm.

A unique method of drive eliminates the need of a separate feed screw for each pitch or direction change. Either direction of cut, and all pitches from 80 to over 500 lines per inch are instantly available—with one feed screw—one lathe—one drive. Its facilities are adaptable to all pitch requirements of the industry

The 523 provides instant variation of pitch from 80 to 160 lines-per-inch—by means of a unique planetary-driven lead screw. Operation is by means of an easily accessible knurled knob. Pitch is accurately indicated by the calibrated dial which also shows the standard NAB pitches. With this instant pitch adjustment, it is possible to record a very loud passage at 90 lines-per-inch and immediately following soft passages at 120 or 130 lines-per-inch without "dial twisting" or the danger of "overcutting" the next groove.

Fifteen minute transcriptions play back with split-second accuracy. The 1800 rpm motor is synchronous. The drive, through center, is positive at the 33.3 rpm speed—obtained by a 54 to 1 gear-and-worm reduction of the motor speed. The only necessary interlocking device to other synchronous equipment is the A.C. line. The 78 rpm speed is obtained through a precision friction-ball-race step-up.

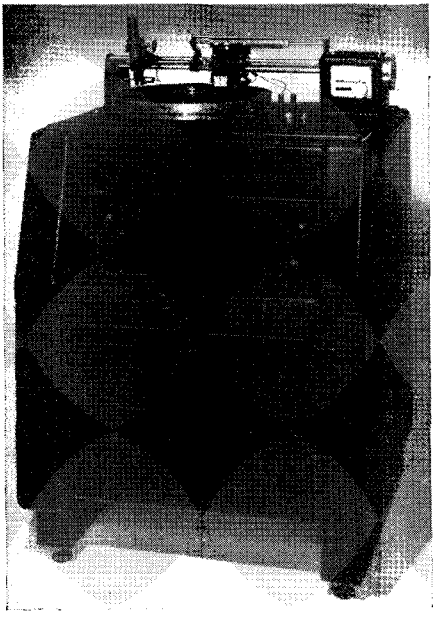

Fig. 5-38. The Fairchild 523 professional studio recorder is shaft driven. (Courtesy, Fairchild)

Evenness of speed is obtained by a carefully calculated loading of the drive

mechanism to keep the motor pulling constantly; by careful precision control of all drive alignments that might cause intermittent grab and release. Further aid to wow-free performance is provided by a perfectly balanced 16″ turntable with extra weight in the rim. The turntable clutch, which permits shifting from 33.3 to 78 rpm in operation, aids in smooth stopping and starting.

Turntable noise, rumble and vibration are practically non-existent because of the unique method of mounting the drive. A specially designed rubber coupling connects the motor to the drive which is spring-mounted and precision-aligned in a single heavy casting. Special mechanical filters on the hollow drive shaft reduce the transmission of vibration from the drive mechanism to the turntable which is mounted in a heavily webbed cast aluminum panel at the top of the cabinet.

Unit 541 Magnetic Cutterhead (Fig. 5-39), which is standard equipment, provides a wide frequency range at high recording level with a low distortion content.

The overhead carriage mechanism which mounts the cutterhead permits adjustments for depth and angle of cut while recording. A rising front with an up-and-down travel of ¾ inch permits adjustment for acetate discs and flowed wax masters. The cutterhead mounting is released and pivoted upward for ease of stylus adjustment. Ample clearance is provided between the table and overhead lathe mechanism —and a manually operated spiralling device is within easy reach.

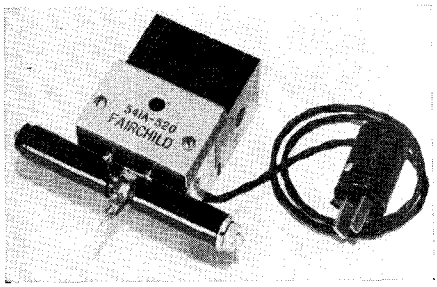

Fig. 5-39. The Fairchild 541 magnetic cutter head used with the 523 studio recorder.

A high quality microscope with light mounted on the lathe mechanism permits close observation of depth of cut and condition of the groove at all times. The light is mounted so that it may be rotated to permit scanning of the side walls of the groove.

An octagonal time scale, mounted above the overhead mechanism, is calibrated in minutes on separate scales for standard NAB pitch, speed and direction of cut. Depending on the pitch and speed being used, the octagonal drum is rotated until the proper scale appears under the pointer. The operator may read directly from the scale the minutes of recording completed and the time remaining. A separate scale with pointer indicates the correct starting point of recording for 16, 12 and 10 inch masters.

The cabinet, solidly constructed of wood, has been designed to meet the exacting needs of mechanical operation and servicing. The table height is 41″. The feet are adjustable for leveling. The front panel is also a service door affording easy access to the drive, motor and other mechanism.

SPECIFICATIONS

Equipment Data and Dimensions

Turntable Speeds	33⅓ rpm direct through worm and gear. 78 rpm step-up through precision ball race.
Speed Regulation	(a) Absolete timing at 33⅓ speed within limits of power line frequency. (b) Instantaneous speed variation less than .15% at 33⅓; less than .2% at 78.

Pitch.....Continuously variable from 80 to over 500 lines per inch.
Noise Level.....Better than 55 db. below reference.
Turntable Size.....16 inch diameter. Accommodates 18 inch, ¼" thick flowed wax master.
Turntable Weight.....25 pounds—(approximate).
Motor.....Synchronous, condenser start, condenser run, 1/25 hp.
Dimensions.....Panel.....22" x 30"
Cabinet.....28" x 32" x 38" high
Turntable Height....41"
Weight.....275 pounds—(approximate).
Finish.....Satin black lacquer.
Power Requirements.....110-120 volts, 60 cycles standard. (220 volts 50 or 60 cycles, and 110 volts 50 cycles available.)
Power Consumption.....100 Watts

STANDARD STOCK ASSEMBLY

Code

UNIT 523 STUDIO RECORDER in cabinet, complete with *Fairchild* Unit 541 cutterhead; microscope and mount; attachment for suction device.....VNGUA

Fairchild Unit 541 Magnetic Cutterhead (Fig. 5-39) is standard equipment with the Unit 523 Studio Recorder and Unit 539 Portable Recorder.

Response Data

The distortion measurements by the manufacturer and given below are based upon the average performance of ten Cutterheads selected at random. A recording of a 400-cycle note was made at a recording level of + 20 db. (reference .006 watt) to produce a stylus velocity of 2.5 inches per second. Playback was made with a *Fairchild* Dynamic Pick-up. The overall distortion, including cutterhead, amplifiers, pick-up and acetate record was 1.7%.

Frequency response.....± 2 db., 30 to 8,000 cycles
Distortion.....Less than 1%, 400 cycles
Impedance.....500 ohms
Audio Power required.....0.6 watt (+ 20 db.)
Size stylus accommodated.....⅝" long, .062 diameter.

CHAPTER 6

Microgroove Recording

A discussion of the Columbia LP and RCA 45 rpm records.

● A major contribution to the public in high quality records is the result of the introduction of Columbia's Microgroove records. These "LP" vinylite pressings have the following advantages over the standard 33⅓ rpm transcriptions, such as are employed by the broadcasters: (1) Longer playing time, (2) Improved dynamic range, (3) High-fidelity frequency response, (4) Light needle pressures, (5) Longer record life, (6) Absence of needle scratch, background noise or turntable rumble.

Many years ago, machines were introduced having a speed of 33⅓ rpm and were used in the home record market. These early attempts to employ slow speed and to attain greater playing time failed because the groove pitch could not be made fine enough to get a substantial increase in recording time and the distortion and noise were excessive. Most of these early machines that operated at 33⅓ rpm had a tendency to have excessive wows at this slow speed. As a result the public did not accept this new "slow speed" recording.

It was not until recently that Peter Goldmark and other engineers of *Columbia* working with personnel of *Philco* designed special equipment to reproduce the new LP (long-play) records. Using the microgroove system, 50 minutes (both sides) may be recorded on a 12″ disc at 33⅓ rpm. This compares to 8 or 9 minutes (one side) on a standard 33⅓ rpm disc and 4 to 5 minutes on a standard 78 rpm disc. 224 to 300 lines-per-inch are employed instead of the conventional 96 to 120.

Comparing the groove widths of a microgroove record and a standard 33⅓ record we find the conditions as illustrated in Fig. 6-1. Note that the groove widths of the new records are approximately ⅓ those of the standard type. Obviously this necessitates the use of a very light pressure play-back head and a much smaller stylus tip radius than is commonly employed. Due to the fragility of the stylus more care must be exercised in the handling and the changing of records in order to not damage the delicate grooves. One of the major problems that had to be overcome was the decrease in turntable speed from the home standard of 78 rpm (which introduces a time factor of 2.35). In addition the larger number of grooves compared to the conventional 96 to 120 per inch standard provides an additional factor. As a result as much as 50 minutes of playing time can be accommodated on both sides of a 12″ record. This compares with about 8 minutes (one side) on the older type.

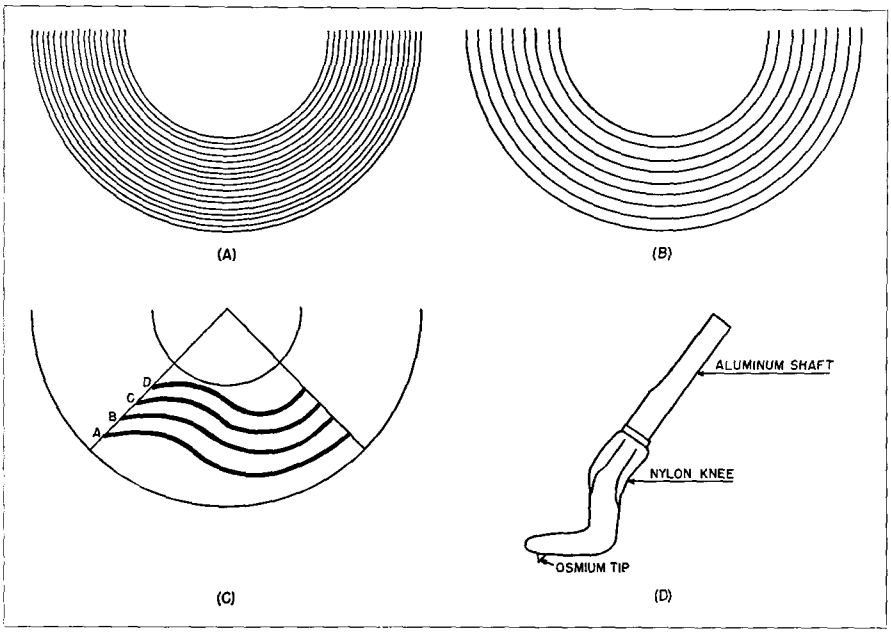

Fig. 6-1. (A and B) Comparison of the number of grooves cut on a (A) Microgroove and (B) standard recording. (C) An exaggerated example of the "pinch effect." (D) The Webster-Chicago nylon "knee-action" needle designed to be used with Microgroove records.

As mentioned the new pressings are of vinylite plastic. The noise level is far below that of the standard shellac pressing. This material, therefore, lends itself well to the recording of high-fidelity records. The first, and perhaps most important limitation, when we consider the advantages of microgroove records, is the limitation that arises from the very nature of lateral disc recording which is the inherent inability to obtain a flat frequency response over the entire record portion. This applies at 33⅓ rpm and is due to the velocity of the recording stylus decreasing as it moves toward the center of the disc, as explained in previous chapters. As the velocity decreases insufficient space is provided in the groove to permit satisfactory cutting of the higher frequencies, especially those having very short duration. Consequently, higher frequencies are either lost entirely or are attenuated to a marked degree as the recording diameter is decreased. Fig. 6-1C illustrates the effect. A, B, C and D represent the same frequency but at different recording diameters. Note the increased distortion when the stylus compresses each audio cycle into a smaller segment with each successive revolution. We refer to this condition as translation loss or pinch effect. This necessitates the placing of a practical limit on the minimum cutting diameter and the use of an equalizer to restore, at least in part, losses of high frequency response as the inner diameters are approached.

Conventional methods are to pre-emphasize the higher frequencies as the stylus approaches the inner diameters. If the recording is to be made from the inside out the process would be reversed. The minimum recording diameter is usually about 8 inches at 33⅓ rpm and 5.75 inches at 78 rpm. Two important recording factors govern the high-fidelity response in microgroove records. Fidelity during the recording process depends mainly upon; minimum recording diameter, ratio of mod-

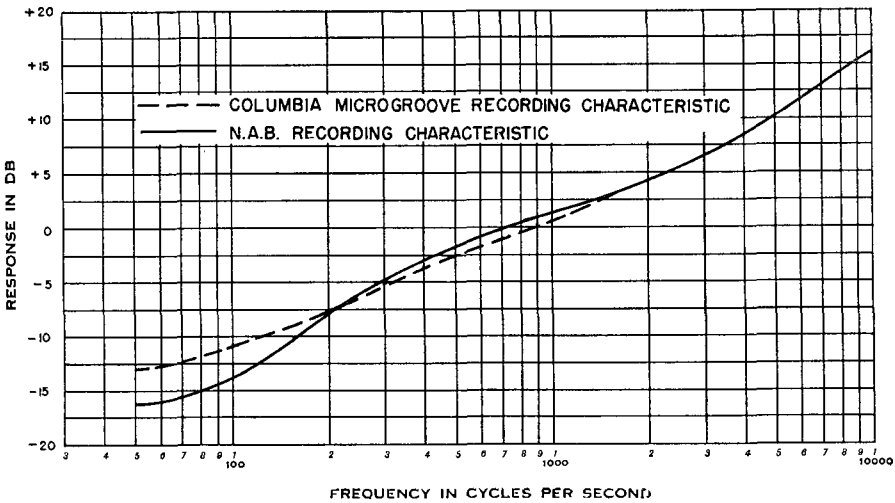

Fig. 6-2

ulated to unmodulated grooves, the record speed and the stylus tip radius. Generally high frequency response is greatly reduced at 33⅓ and is proportionally increased at the standard speed of 78 rpm.

On the other hand the range of the high frequencies can be increased by equipping the stylus with a smaller stylus tip. This results in much longer playing time on microgroove records due to the slow speed and also to the increase in lines per inch.

A special stylus is employed in lightweight pickup design, having a .001″ stylus tip radius and with a pressure on the record of .20 ounce. This compares with a .003″ stylus radius and approximately a 1.0 ounce pressure employed with standard pickups. The inner diameter of microgroove recordings are 5.75 inches. The smaller tip radius allows such high frequency compensation that frequency response and lack of distortion at this inner diameter is still an improvement over that of standard 33⅓ records having an 8″ inner groove diameter.

The groove widths employed in microgroove records are approximately .003″. This is roughly ⅓ the size of standard record grooves. Recording level for microgroove is reduced by about 6 db. over that employed for standard discs. In reality the recorded level is approximately 4 db. below the usual reference employed. The use of vinylite makes an extremely low noise level possible, otherwise the 4 db. loss would not be acceptable if the base material were of the usual shellac variety.

Special lightweight pickups have been designed especially to reproduce micro-

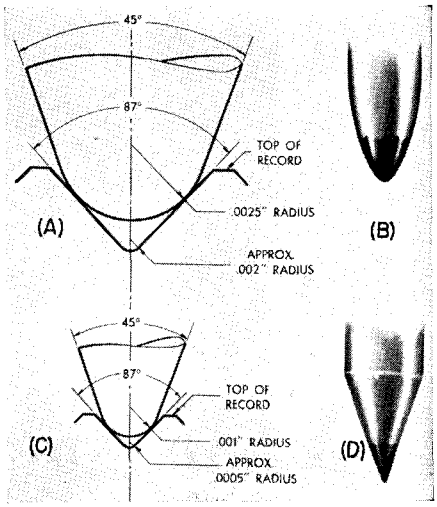

Fig. 6-3.

groove records. These new feather-weight pickups, together with the low noise properties of vinylite, permit an acceptable noise level to be had, even though maintaining a dynamic range in the order of 45 db.

During the recording of microgroove records the NARTB curve is closely followed, except that emphasis is added for frequencies below approximately 100 cycles. This is required to effect a reduction in turntable rumble and other background noise. Because of the absence of noise from both the vinylite material and the use of lightweight pickups it is possible to record all low and high passages without greatly increasing or decreasing the volume. As a result a better "naturalness" is attained.

Originally the groove shape employed in microgroove recording had an included angle of approximately 87 degrees, Fig. 6-3. The tip radius was slightly

	10″ Record	12″ Record
Diameter	9⅞″ ± 1/32″	11⅞″ ± 1/32″
Thickness	.075″ ± .010″	.075″ ± .010″
Center hole	.286″ + .001″ — .002″	.286″ + .001″ — .002″
Concentricity	Run-out not to exceed .010″	Run-out not to exceed .010″
First record groove diameter	9½″ ± .020″	11½″ ± .020″
Minimum inside diameter	4¾″	4¾″
Eccentric groove diameter	4 7/16″	4 7/16″
Eccentric groove run-out	.250″ ± .015″ Shape same as music grooves	.250″ ± .015″ Shape same as music grooves
Speed	33⅓ rpm	33⅓ rpm
	Groove Shape	
Included angle	87° ± 3°	87° ± 3°
Tip Radius	Under .002″	Under .002″
Width at top	.0027″ to .003″	.0027″ to .003″

Fig. 6-4. Specifications covering Columbia's LP Microgroove records. Tolerances indicate careful control of manufacturing processes to insure consistent results.

Grooves per inch	Turntable speed	Approx. minutes of recording 16″	12″	10″	7″ record
96	78	6½	4	2¾	
112	78	7½	4½	3¼	
120	78	8	5	3½	
136	78	9	5½	3¾	
154	78	10	6	4	
275	45				5¼
96	33⅓	14	8	5¼	
112	33⅓	16	9¼	6	
120	33⅓	17	9¾	6	
136	33⅓	18	10	6	
154	33⅓	20	11	6½	
300 max.	33⅓		25	10	5

Time given is for making reference recordings only and is based on using the entire blank. 17¼″ blanks, when used for pressing masters, should be recorded as a 16″ blank.

Fig. 6-5. Table of Playing Times for Record Size, RPM, Grooves Per Inch.

under .002 inch. Reproduction of these LP pressings is therefore not possible with the standard stylus having a .003 inch radius. As mentioned microgroove records follow closely the standard curve of the NARTB, Fig. 6-2. This makes possible the use of regular equalizers employed by the broadcasters when reproducing microgroove records. If further equalization is deemed necessary very simple *R-C* circuits will provide the added equalization.

Essential specifications for *Columbia* microgroove records are shown in the table (Fig. 6-4) and the comparison of other systems for playing time in the table (Fig. 6-5).

Professional Microgroove Recording

Fine groove recording[1] offers some advantages that should not be overlooked by the broadcaster or recording studio. For example, a twelve-inch blank is good for 30 minutes of recording—15 minutes to a side—and the smaller blank means a substantial saving in both first cost and storage space. Moveover, due to the potentialities of the fine groove system an improvement in quality, as will be pointed out later in discussing intermodulation and the innermost recording diameter, is also possible. All of this can be accomplished by using only standard recording equipment as illustrated in Figs. 6-6 and 6-7 with minor alterations.

[1]H. E. Roys, "Recording and Fine Groove Technique," Broadcast News, No. 60, pp. 8-17, July-Aug., 1950.

Equipment

The simple, yet proved system setups shown in Figs. 6-6 and 6-7 have been selected as practical "73-B" recording circuits (for 45, 33⅓ and 78 rpm) which will provide good "day-to-day" performance. Both are typical broadcast recording layouts—easy to set up—and are made up from standard stock *RCA* recorder components and accessories. In the diagrams (Figs. 6-6 and 6-7), each recording component is represented by a block which includes the stock identification or ordering number. Most of these items are described and pictured in the *RCA* Broadcast Equipment Catalog which may be used for further reference.

Either recording system (Fig. 6-6 or 6-7) fully meets the requirements for high-quality recordings (fine groove or standard) in broadcast and television services, recording studios, advertising agencies and educational institutions.

Fine Groove Modification

For fine groove recording, no changes are required in the recording layouts illustrated. The addition of fine groove recording kit, MI-11882, to the 73-B recorder and a change in cutting stylus are the only modifications required. Recordings can be made at 45 rpm if new motor drive pulleys MI-11860 for 45 and 33⅓ rpm or MI-11861 for 45 and 78 rpm are obtained. Fine groove cutting styli can be obtained directly from *Frank L. Capps & Co.*, 244 West 49th Street, New York 19, New York.

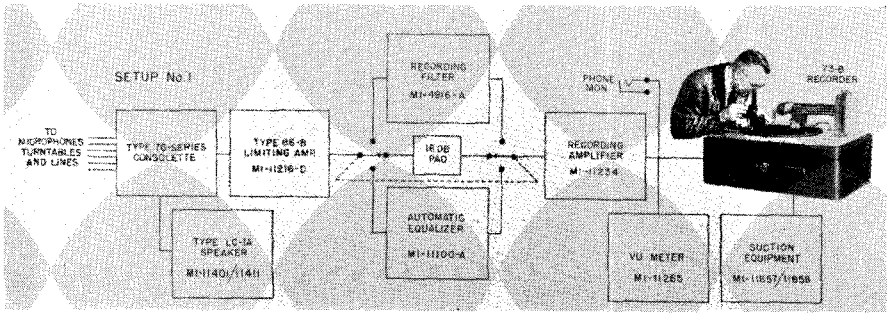

Fig. 6-6. (Courtesy, RCA)

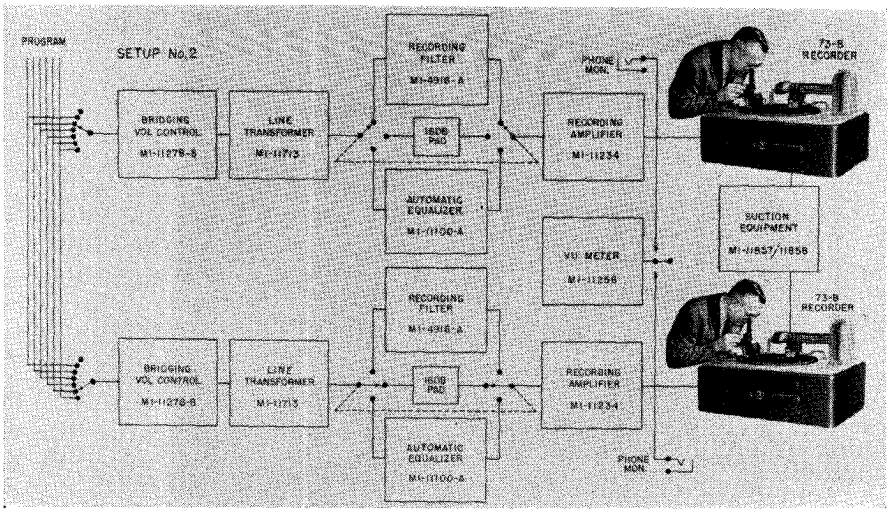

Fig. 6-7. (Courtesy, RCA)

Three different types are available:

1. Routine microgroove styli.
2. Master styli, which are made to the customer's specification. The usual specification is: 90° included angle, 0.25 mil radius of the cutting tip, burnishing facet 0.2-0.5 mils.
3. Anti-Noise Modulation styli with multiple burnishing facets.
   a. V-groove, 111 stylus, included angle 87° and a sharp cutting point, 3 burnishing facets each 0.1 mil.
   b. Similar to (a) except the tip radius is 0.25 mils.

Fine Groove Kit

The kit (Fig. 6-8) is designed to adapt the *RCA* Type 73-B Professional Recorder for recording more grooves per inch than is normally possible. A speed-reducing pulley and belt system replaces the original belt coupling between the turntable spindle and the cutter-head drive mechanism. The new coupling reduces the speed of the cutting head across the turntable by half without changing the turntable speed, and thus doubles the number of grooves per inch. The design of the kit permits restoring the recorder to its original cutting speed conveniently and quickly.

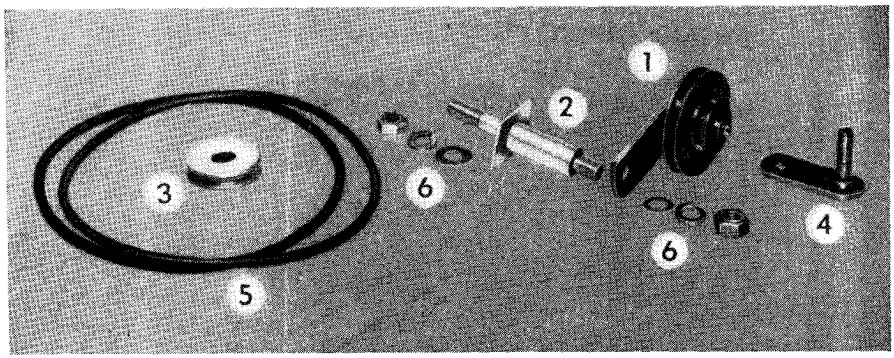

Fig. 6-8. (Courtesy, RCA)

Recording Technique

The technique involved in fine groove recording is essentially the same as that used in making standard NARTB (Fig. 6-2) transcriptions. In order to minimize playback distortion, commonly known as tracing distortion, it is desirable to establish a limit for the recording level. A peak recording level of about 14 cm. a second has been assumed since results on 45 rpm records has indicated this to be a reasonable and acceptable level for fine groove recording. The value is believed to be in fair agreement with the levels normally used for transcription recording. A common means of adjudging the recording level is by comparing the output of the recorded lacquer with that obtained from a fine groove pressing (either 45 or 33⅓ rpm phonograph record). Some discrepancy may occur in doing this however, due to the greater yield of the lacquer under the pressure of the stylus tip, since the lacquer is much softer than the vinyl used for pressings. The loss in output would be more noticeable at the higher frequencies where the wavelengths are shorter. Frequency test records that have been calibrated for recorded level are particularly useful for level checks and *RCA* has several of these available. Two banded frequency records, 12-5-25 (460625-6) for 33⅓ and 12-5-31, for 45 rpm operations are obtainable. The 33⅓ record has a wide, deep groove with a bottom groove radius of less than 0.5 mil so that it can be used for response measurements with pickups having tip radii that range from 0.75 to 3.0 mils. Frequencies from 30 to 12,000 cycles are covered by this record. Record 12-5-31 is for fine groove reproduction only and frequencies from 50 to 10,000 cycles are included.

Records 12-5-39 for 78 rpm, and 12-5-37 for 45 rpm are particularly useful for level checks since they contain frequency bands recorded at different levels. Both records were made for distortion testing and contain intermodulation frequencies of 400 and 4000 cycles. The 78 rpm record has peak levels ranging from about 4.4 to 27 cm. a second, varying in 2 db. steps. The 45 rpm record has peak levels ranging from about 3.8 to 18 cm. a second also varying in 2 db. steps.

High frequency tip-up, such as prescribed by NARTB for standard lateral characteristic, can be used in the normal manner when cutting fine groove lacquers. However, in order to record the high frequencies on the lacquer it is essential that the width of the burnishing facet of the cutting stylus be small, otherwise appreciable loss in recorded level may occur. The loss becomes great whenever the width of the facet becomes appreciable with respect to length of the recorded wave.

Groove Dimensions

In disc recording the width or depth of the groove should be governed solely by the dimensions of the playback tip and not by modulation or the spacing between the grooves. It is the primary function of the groove to provide a means of establishing good, firm mechanical contact with the playback stylus tip. To do this, a recording stylus having a suitable tip shape must be selected and the depth of cut properly adjusted when recording. The depth should be such that the contact with the groove sidewalls is well below the top, so that surface scratches and edge irregularities are not reproduced as noise. An ideal groove contour and

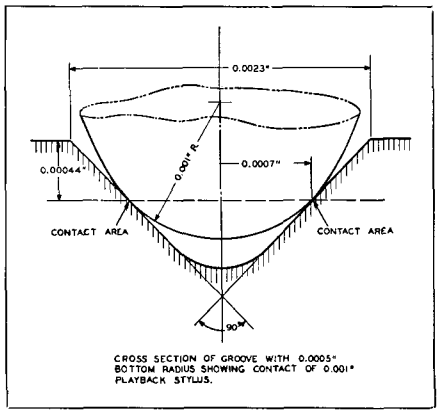

Fig. 6-9

stylus fit for a 1.0 mil playback tip is illustrated in Fig. 6-9. For lateral recordings, contact along the bottom of the groove is not desirable; hence it is usual practice to use a cutting stylus with a tip radius much smaller than that used for reproduction. For normal groove recording where a 2.5 or a 3.0 mil stylus is used for playback purposes, the groove depth and width should be greater. Thus the principle of maintaining contact below surface of disc is still retained.

Tracing Distortion and the Innermost Diameter

When the outside diameter is fixed by selection of the disc size, the starting diameter is also essentially fixed. The pitch or number of grooves per inch, for a particular playing time then depends upon the innermost diameter. In determining the innermost diameter, consideration should be given to reproduction. The reproducer or pickup uses a rounded tip of a finite radius, and when the recorded wavelengths become short and comparable to the size of the playback tip, difficulty in tracing the path of the recording stylus occurs. The resulting effect is known as tracing distortion, and it may reach serious proportions near the inside of the disc where the wavelengths are short.

Tracing distortion has been studied theoretically by Hunt and Pierce[2] and also by Hunt and Lewis[3]. Roys of *RCA* has spent considerable time and effort in studying the problem and good results in correlating theory, practice and measurements have been obtained. Frequencies of 400 and 4000 cycles when

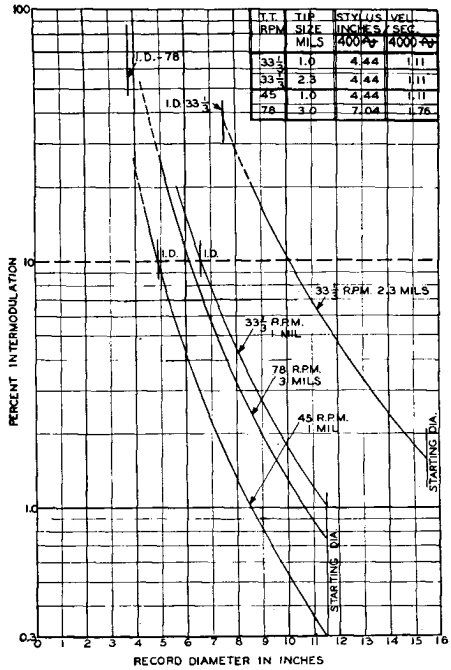

Fig. 6-10

tion test signal[4,5] have been found valuable for such studies. Some of the results of the investigation are shown in Fig. 6-10 and these can be used in determining the innermost diameter for the 12-inch fine groove lacquer.

Listening tests over a wide range system by trained observers have shown that distortions exceeding 10 percent intermodulation (based upon test frequencies of 400 and 4000 cycles) are evident so that the 10 percent value was selected as a design limit. It can be seen from Fig. 6-10 that 10 percent modulation is reached at 6.5 inches diameter for 33⅓ rpm and 4.9 inches diameter for 45 rpm when using a 1.0 mil play-

[2]J. A. Pierce and F. V. Hunt "On Distortion in Sound Reproduction from Phonograph Records," Jour. Acous. Soc. Amer., Vol. 10, pp. 14-28, July 1938.

[3]W. D. Lewis and F. V. Hunt, "A Theory of Tracing Distortion in Sound Reproduction from Phonograph Records," Jour. Acous. Soc. Amer., Vol. 12, pp. 348-365, Jan. 1941.

combined and used as an intermodula-

[4]H. E. Roys, "Analysis by the Two Frequency Intermodulation Method of Tracing Distortion Encountered in Phonograph Reproduction," *RCA* Review, Vol. 10, No. 2, pp. 241-269, June 1949.

[5]M. S. Corrington, "Tracing Distortion in Phonograph Records" *RCA* Review, Vol. 10, No. 2, pp. 241-253, June 1949.

back tip and a peak recording level of 5.55 inches a second (approximately 14 cm. a second). This recording level is believed to be representative of the peak levels normally encountered in transcription recording. It can also be observed in Fig. 6-10 that existing standards for 33⅓ rpm transcriptions and 78 rpm recordings permit distortions far exceeding 10 percent at the inner diameters. This type of distortion (known as tracing distortion) is particularly noticeable at the inside of some 78 rpm recordings where the recorded level is high. The 45 rpm system was designed so that 10 percent intermodulation was not exceeded even at the innermost recording diameter and a diameter of 4.9 inches was selected for the last music groove.

Number of Grooves Per Inch

Having thus determined the value of the innermost recording diameter (that does not exceed 10 percent intermodulation) the number of grooves per inch can be calculated. These are given for turntable speeds of both 45 and 33⅓ revolutions a minute. The total number of Grooves, (G) for 15 minutes will be:

$$(45)\ G = 15 \times 45 = 675$$
$$(33\tfrac{1}{3})\ G = 15 \times 33\tfrac{1}{3} = 500$$

The usable playing radius (PR) available is:

$$(45)\ PR = \frac{11.5 - 4.90}{2} = 3.3 \text{ inches}$$
$$(33\tfrac{1}{3})\ PR = \frac{11.5 - 6.5}{2} = 2.5 \text{ inches}$$

where 11.5 is the starting diameter and 4.9 and 6.5 are the finishing diameters.

The number (N) of grooves per inch will therefore be:

$$(45)\ N = \frac{675}{3.3} = 204$$
$$(33\tfrac{1}{3})\ N = \frac{500}{2.5} = 200$$

In order to allow a few blank grooves at the beginning and ending of the recording this number should be increased to 208 for either 45 or 33⅓ rpm.

The pitch (P) would therefore be:

$$P = \frac{1.00}{208} = .0048 \text{ inches}$$

If we maintain the groove width as shown in Fig. 6-9, the "land" (material between the grooves) will be .0025 inches. For ease of adjustment in recording, the depth of cut can then be adjusted so that (for a stylus that cuts a groove having a 90° included angle) the width of the groove will be equal to that of the land.

A greater number of grooves per inch can be used and many fine groove records are cut with as high as 275 to 300 grooves to the inch. When the playing time is such that close spacing is unnecessary, it is advantageous to cut a slightly wider and deeper groove so that better contact is assured between groove and reproducer tip.

Cutter Bounce

There are several design features that have been incorporated in the *RCA* 73-B recorder that make it particularly suited for both normal and fine groove recording. These features are the results of studies[6] made years ago to improve the operational characteristics of the recorder. The *RCA* recording head MI-11850-C was changed from the "vertical" to the "flat" type, and the pivots about which it rotates raised. These changes were made in order to minimize "cutter bounce," a form a oscillation that occurs at some low frequency, depending upon the mass of recording head and the effective stiffness of the system.

The vertical motion due to bounce cuts a groove of varying width and depth, and in extreme cases the cutting tip may leave the disc entirely. Naturally, a groove of varying depth does not promote a good pickup tracking, and, of course, no groove at all omits some modulation.

---

[6]H. E. Roys, "Force at the Stylus Tip While Cutting Lacquer Disk-Recording Blanks," Proc. IRE, Vol. 35, No. 11, pp. 1360-1363, Nov. 1947.

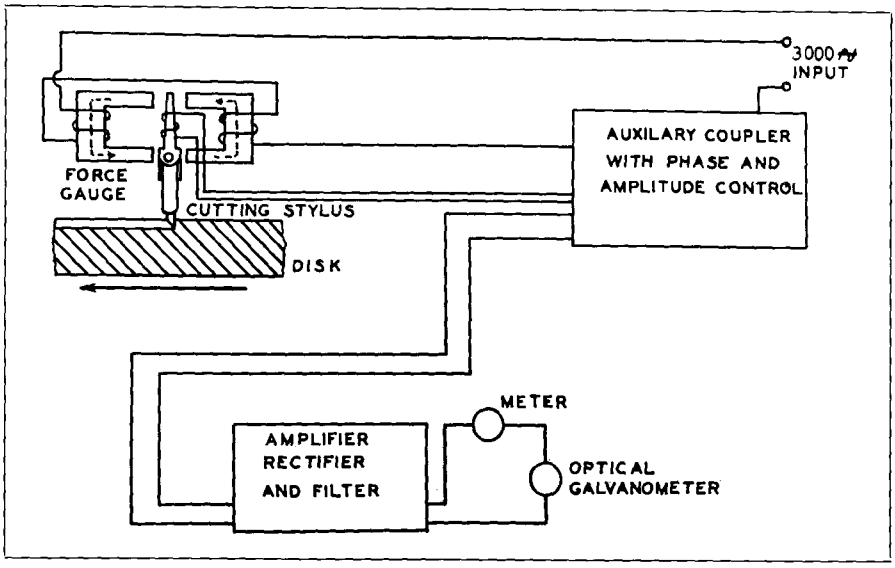

Fig. 6-11

Force Gauge

In order to study cutter bounce, a simple device was constructed to permit measurement of the force at the tip of the stylus while cutting a blank groove. The pole piece and armature of a recording head was rotated 90° from its normal position. This permitted movement of the armature in a direction tangent to the groove, as shown in Fig. 6-11. The stylus was mounted so that the cutting surface remained in its normal plane. The deflection of the stylus was measured electrically. A 3000 cps field supply was used, and any movement of the stylus induced a 3000 cps voltage in the armature coil which was proportional to the displacement.

For steady forces which vary at a very low rate, a direct-current meter was used to measure the rectified 3000 cps voltage. For variations at a higher rate, a galvanometer was used to indicate the modulation after the 3000 cps carrier had been filtered out.

Bounce Measurements

Vertical oscillation or bounce was readily encountered as evidenced by the results shown in the oscillograms of Fig. 6-12. Means were then studied for minimizing it.

Since the bounce is an oscillating condition, it can be suppressed by introducing resistance into the mechanical system. Fig. 6-12A shows a recording of the vertical oscillation at 78 revolutions per minute, and Fig. 6-12B shows how it was reduced by means of an air dashpot. The dashpot is effective, but suffers a disadvantage when the disc is tilted due to warpage or turntable wobble.

If enough resistance is used to reduce the oscillation effectively, it may cause the recording head to act sluggishly on warped discs and cut a groove of varying depth. Fig. 6-12D shows the force variation with the dashpot on a 16-inch-diameter lacquer disc which was tilted 0.025 inch to simulate the motion produced when the blank is warped. The once-around variation in force, due to the tilt, is plainly evident. It is interesting to note that the average force without the dashpot (Fig. 6-12C) shows almost no variation, thus illustrating the self-regulating action of the recording head even with the disc tilted.

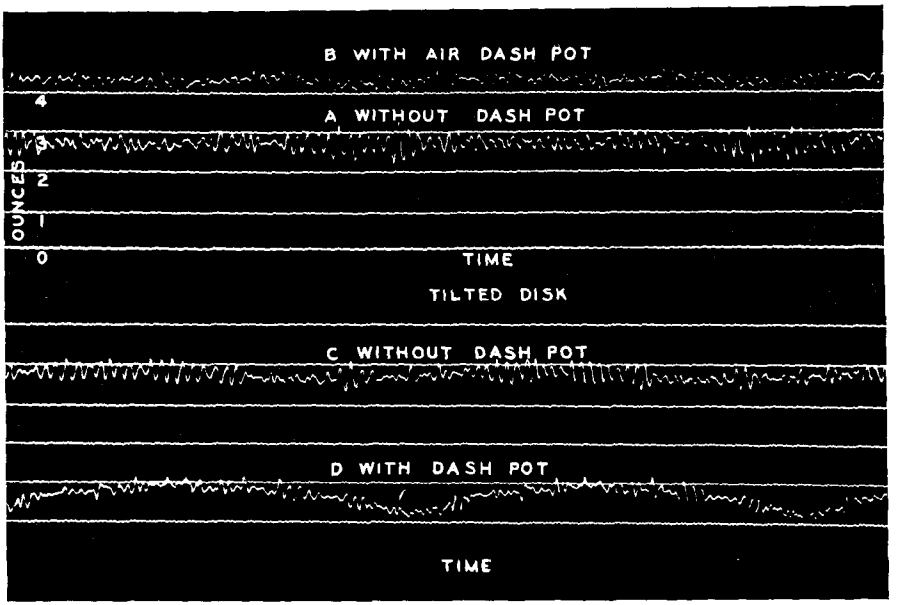

Fig. 6-12

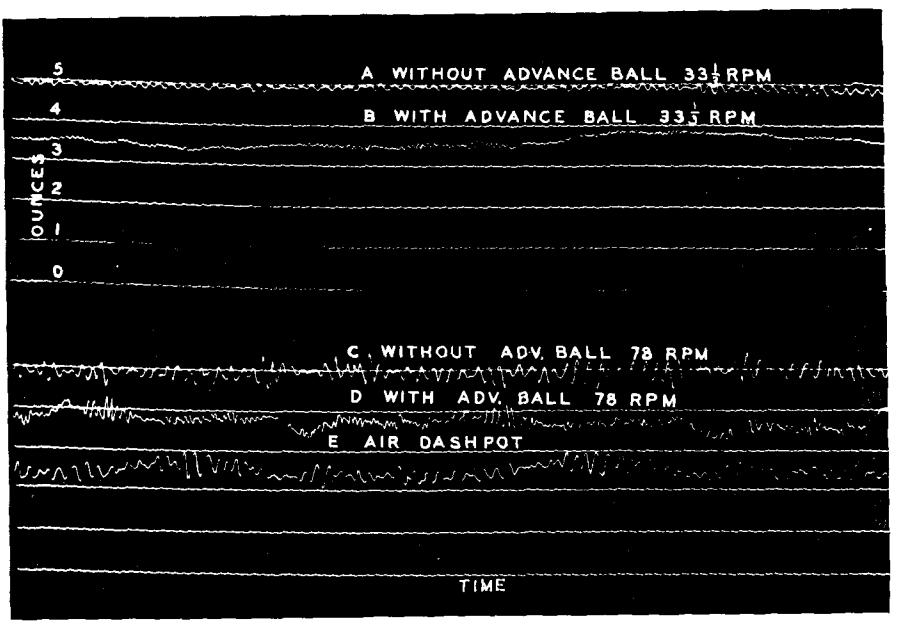

Fig. 6-13

Since the dashpot had some disadvantages, an advance ball was tried. Figs. 6-13A and B show the cutting forces measured at 33⅓ rpm without and with the advance ball, and Figs. 6-13C and D show the same tests at a turntable speed of 78 rpm. The galvanometer beam was shifted for each

trace so that its position with respect to the ordinate "Force" scale is only relative. The force scale was included to show the magnitude of the force variations being measured. The frequency of oscillation is raised and the amplitude of oscillation is decreased, but the force now varies considerably due to the fact that the self-regulating action of the head has been sacrificed by using the advance ball, which holds the stylus at some predetermined depth independent of hardness of the lacquer.

Perhaps the best way to use the advance ball is to adjust it so that it barely touches the disc, and so that it clears entirely when the recording head is raised by hard spots but does not dig in too deeply when cutting softer portions. In this way the self-regulating action of the cutter is partially retained, the beneficial action in reducing bounce is partially retained, and the protection of the stylus tip from damage (due to dropping or recutting the same groove) is wholly retained.

Recorder Action

The oscillograms, with the recording head suspended freely, show the average force to be nearly constant; low-frequency variations due to hard spots or record warpage are not evident. The horizontal force, F_h of Fig. 6-14, at the stylus tip while cutting, creates a moment M_1 about the pivotal axis which tends to raise the recorder. Opposing this is the downward moment M_2 created by the vertical force F_v also acting about the same axis. F_v is measured with the stylus clear of the record but with the stylus at the same height relative to the pivot as when cutting the groove. During cutting, equilibrium is attained, when the two moments are equal, and the depth of cut is regulated by adjusting the vertical force by spring or counter-weight adjustment. Data taken with a sharp-edged cutting stylus show these two moments to be equal. The product of the horizontal and vertical forces, F_h and F_v by their effective distances from the pivotal axis, a and b, resulted in $M_1 = M_2$, showing that the record material does not exert a vertical force on the stylus.

When a sapphire stylus is used, having a burnishing edge for polishing the groove side walls, some additional force to accomplish this action is required. With this stylus, the downward-acting moment M_2 was found to exceed the lifting moment M_1. The difference is

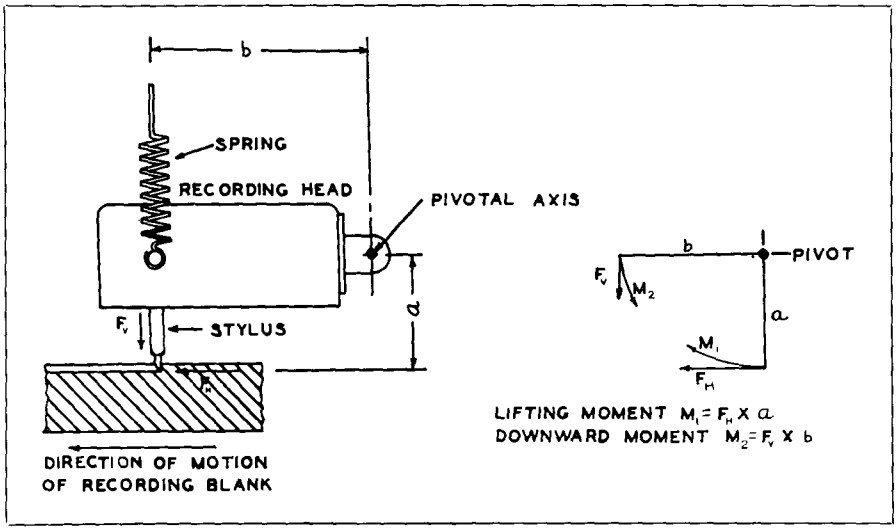

Fig. 6-14

due to the upward-force reaction on the cutting stylus exerted by the record material. In other words, the moment which provides the downward force must overcome the lifting moments due to the horizontal cutting force, plus a pressure to force the stylus into the record material. Taking the difference of M_2 and M_1 and dividing by b, the horizontal distance between the pivotal axis and stylus tip, gives this force, which is an appreciable part of the total vertical force. In other words, the total or resultant force exerted on the stylus by the record is inclined to the horizontal at a considerable angle.

Pivot Location

Experiments indicate that the height of the pivotal axis above the surface of the disc is important, and if too low, oscillation occurs, which results in variations in depth of cut. Fig. 6-15 illustrates the variations in the width of the groove experienced with a tilted disc as the pivot height was changed. The decrease in the width variation with increased pivot height is believed to be due to several practical factors which perhaps may best be illustrated by the following example. If the pivot point is only 0.25 inch above the cutting plane, a cutting force of 2.4 ounces (for a groove about 5 mils wide) results in a lifting moment of 0.6 inch-ounce. If b, Fig. 6-14, is 2 inches, the vertical force for balanced moments is then only 0.3 ounce.

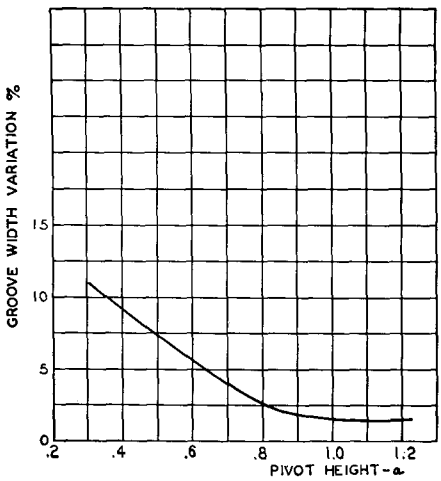

Fig. 6-15

With a recording head having an effective weight of 5 ounces about the pivotal axis, the frictional force at the pivots and between mechanical linkages used for raising and lowering the recorder may be of the same order of magnitude as this balancing force. Likewise, the additional vertical force required for burnishing, when a sapphire is used, may be greater, and so result in a depth regulation which is only partially due to the cutting force at the stylus tip. When a spring is used for groove-depth adjustment, the design should be such that small variations in extension of the spring, due to the rise and fall of the recorder because of record warpage or turntable wobble, will not alter the vertical force appreciably and change the depth of cut. In the 73-B design using a suitable spring and raising the pivot height to 1 inch increased the vertical force to 1.2 ounces and greatly improved the controlling action due to the cutting force. Satisfactory results were then obtained without the aid of an advance ball or dashpot.

Lacquer Hardness Variation

Measurements were made of the variation in lacquer hardness by using an advance ball with the gauge. Fig. 6-16 A shows the cutting-force variation on the outside of a 16-inch disc, and Fig. 6-16B shows the results obtained near the center of the same disc. Part of the once-around variation may be due to warped discs, although every effort was made to reduce such an error by using a long arm between the recording head and its pivot bearings. Any unevenness of the surface would also cause some variation, for the advance ball could not be located closer than about ⅛ inch from the cutting tip. This unevenness probably accounts for

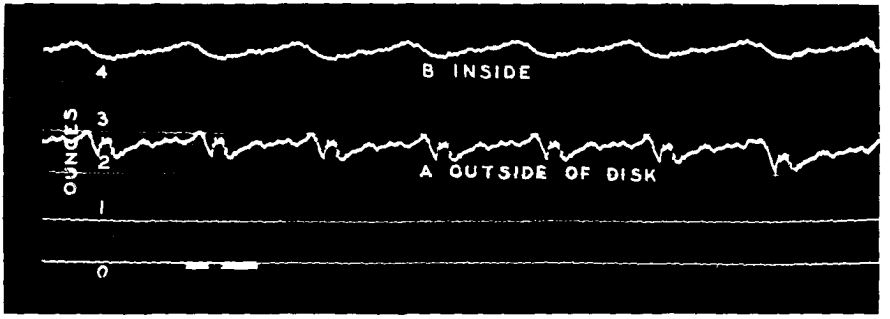

Fig. 6-16

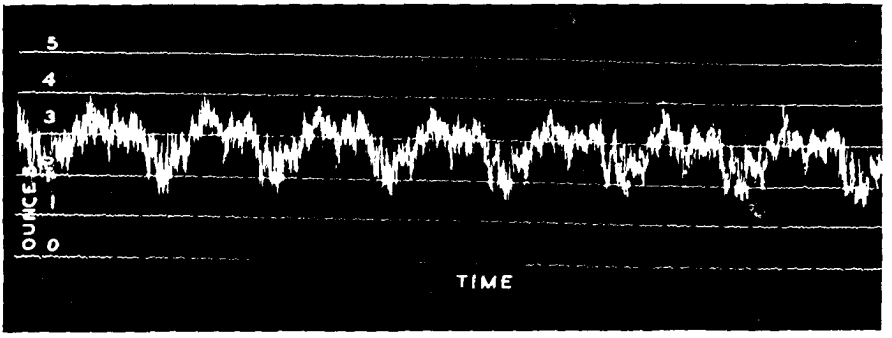

Fig. 6-17

some of the difference noted between the measurements made on the outside and on the inside of the disc, for the disc surfaces are noticeably more wavy near the edge. These variations are not too serious, however, as good recordings can be made with such discs. As an example of what extreme variations may be encountered in discs of the very inexpensive class, the results obtained with a paper-base disc are shown in Fig. 6-17.

CHAPTER 7

Recording (Cutting) Styli

A discussion of the characteristics of cutting styli including standard, Capps ANM, V-Groove and Columbia hot stylus technique.

● There are, in general, three basic types of recording styli in present use. These are: the sapphire, alloy and steel. The cutting stylus acts in the same manner as does the tool which cuts into material on a revolving lathe. As a matter of fact, the cutting stylus is shaped somewhat like a lathe tool. There is one basic difference, however—the tip of the stylus is the only portion of the assembly which does any actual cutting. For that reason, only the tip need be of hardened material. Example: A stylus cuts a groove in the record of approximately .002 inch in depth. Obviously only that part of the stylus within .002 inch of the tip is subjected to wear. The remainder of the stylus is known as the shank. This is the supporting and enclosing medium which serves merely as the connecting link between the cutting head armature and the portion of the stylus which does the cutting. Figs. 7-4 and 7-5 illustrate their design.

It is of major importance that standards be met when manufacturing a stylus for the recording of a sound track in a disc. Not only must the cutting edges of the stylus tip be extremely sharp and free from imperfections, but the sides of the tip must be polished to a very smooth surface. If the cutting edges are not sharp the chip will literally be torn from the blank instead of being cut with a clean stroke as illustrated in Fig. 7-1. The result will be a groove that is noisy. If the sides of the stylus tip are not polished, groove and stylus cuts will be rough and these will cause undue noise in the recording. Therefore, the groove, after being cut by the stylus, should actually shine (Fig. 7-2). This indicates that a properly polished and sufficiently sharp stylus has been used. A dull finish on the sides and bottom of the

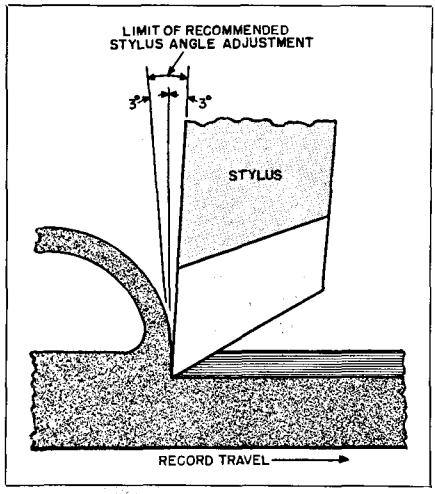

Fig. 7-1. Stylus angle adjustment.

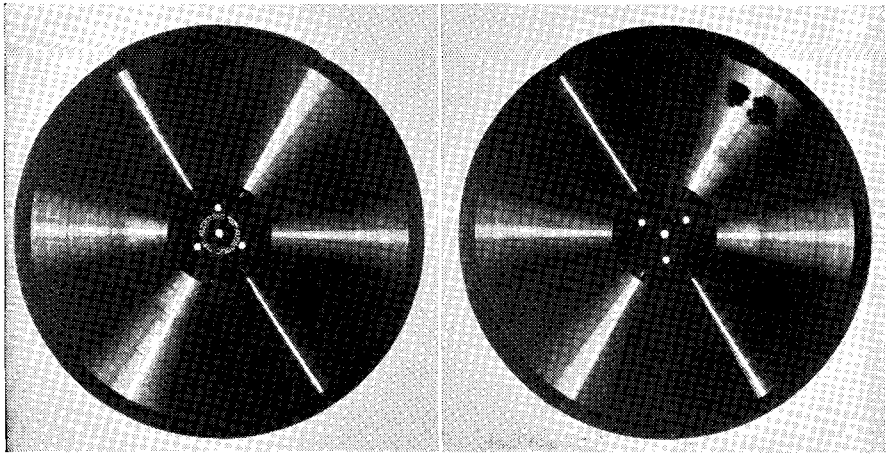

Fig. 7-2. Record cut with new stylus (left). Effects of cutter bounce (right). (Courtesy, Radio & Television News)

groove indicates that a stylus has been used which is unduly worn or which is otherwise defective.

Most recorders today, except for the inexpensive home recorders, employ a sapphire cutting stylus. These require a high degree of workmanship. If the stylus is inaccurately ground and improperly polished it will not give good results. In fact, results will be inferior to those achieved with a new steel stylus of quality manufacture.

The cutting life of a stylus depends upon several factors; first, the hardness of the material on the blank and second, the lineal velocity of the record groove. For example, a stylus will cut longer when cutting twelve inch records at 33⅓ rpm than when cutting the same diameter at 78 rpm. This is because the heat generated at the stylus tip becomes greater as the speed increases.

Sapphire styli may be made from the genuine gem or from synthetic sapphire (aluminum oxide). The gem sapphire is slightly more expensive but will have longer cutting life before requiring repolishing and resharpening. Both genuine and synthetic styli of this type take a high polish, a feature which is of extreme importance. They both have a low coefficient of friction and are very hard.

Sapphire styli may be resharpened many times and will give many hours of trouble-free service. Because of this long life and because they can be resharpened at a fraction of their initial cost, these styli are no more expensive to use than other types. The chief disadvantage is their fragility. The sapphire is quite brittle and very hard. This means that the tip of the sapphire can be easily chipped. A dulled sapphire can be resharpened but a chipped one cannot. When chipping occurs, the stylus must be discarded.

The tiny tip material is enclosed and mounted in a tubular metal shank. The mounting of these tiny points is extremely critical. There must be no side play, that is, the stylus tip must be firmly embedded into the shank where it cannot assume any motion other than that presented from the armature in the cutting head. The better the bond between the shank and stylus tip, the better will be the high frequency response. The sapphire must, accordingly, be handled with great care. To accidentally drop the stylus onto a disc is disastrous. Chances are the tip will be ruined.

A tremendous strain is placed upon the edges of the recording stylus as it cuts the record groove. The amount of surface noise will depend largely upon the ability of the stylus to retain a sharp edge. In other words, the sharper the edge, the quieter will be the result-

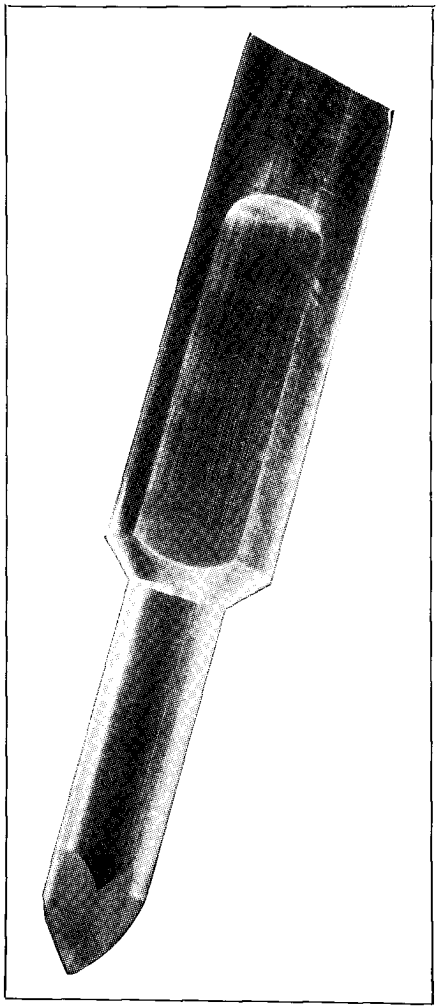

Fig. 7-3. "Stellite" cutting stylus for disc recording.

ing recording. If the edges are dull, the result will be a tearing of the disc material in the groove and the background noise will increase materially. It is, therefore, highly important that the cutting edges be extremely sharp in order that all high frequency undulations be properly impressed on the groove walls. The humps in the vibration waves will vary according to frequency. The low notes or tones will have humps which appear farther apart within the groove than will the high frequency tones or notes. This condition is aggravated where high frequencies appear at low record groove diameters. This is still another reason for using only the best material for the cutting stylus. Furthermore, if sharp edges are not retained, the soft plastic material on the disc will tend to flow instead of being cut properly. Such a condition will result in a recording which sounds mushy or distorted.

Various attempts have been made, some with great success, to develop a cutting stylus making use of an alloy. Usually these styli have a brass or dural shank and only the tip is of the cutting alloy. Some of these styli, using hard material, will last almost as long as a good sapphire. The cost is considerably less however. The chief disadvantage is that these styli have considerably more surface noise than the sapphire and therefore most of the more popular alloy tipped styli employ a metal somewhat softer than the sapphire in order to facilitate proper shaping of the tip and to thereby obtain a lower coefficient of friction. One of these is known as a *"Stellite"* which is tipped with a metal bearing that name (see Fig. 7-3). It is capable of cutting records for approximately two hours. It may be resharpened for about one-half the cost of a new unit. There is little or no danger of this type of stylus chipping, which is the main reason for its popularity. It is particularly well suited for the home recordist as the hazards of ruining a good cutting stylus are greatly reduced. There are many alloy materials employed for a cutting stylus. These are known as "precious metal-tipped styli." One is about as good as another and, as previously mentioned, they are ideally suited to the home recordist.

Steel Styli

The most inexpensive material to use for a cutting stylus is ordinary hard polished steel. There is little hazard from damage when employing such styli. Their life is extremely limited and, figured on a service-per-hour basis, steel styli are actually more expensive

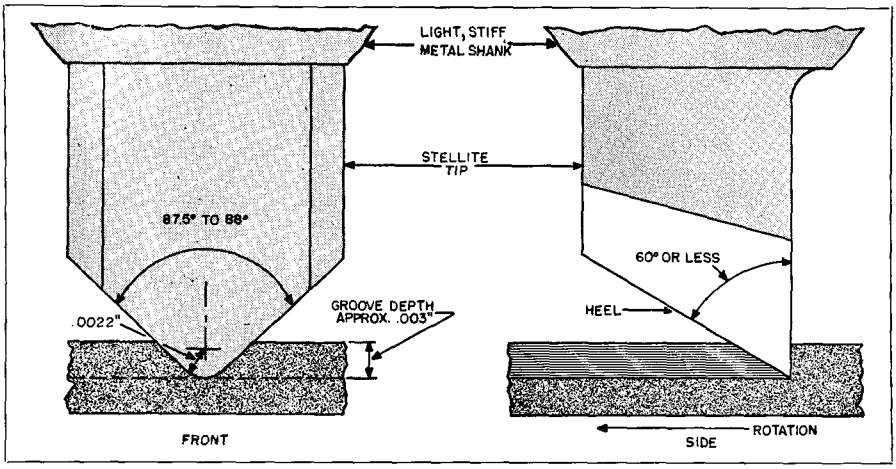

Fig. 7-4. Essential dimensions for steel or "Stellite" cutting stylus.

than sapphires. They cost from about twenty-five cents to seventy-five cents each and have a useful life of approximately thirty minutes.

For the first few seconds they will possess a very sharp, keen cutting edge. However, they dull quickly and the recording gradually becomes quite noisy. The response of a steel stylus is not as good as a sapphire and it is not capable of engraving the high notes comparable to a sapphire. However, the response is sufficiently good to handle speech and general home music where the highest overtones are not appreciated. Steel styli cannot be resharpened or polished and must be discarded after about thirty minutes of use.

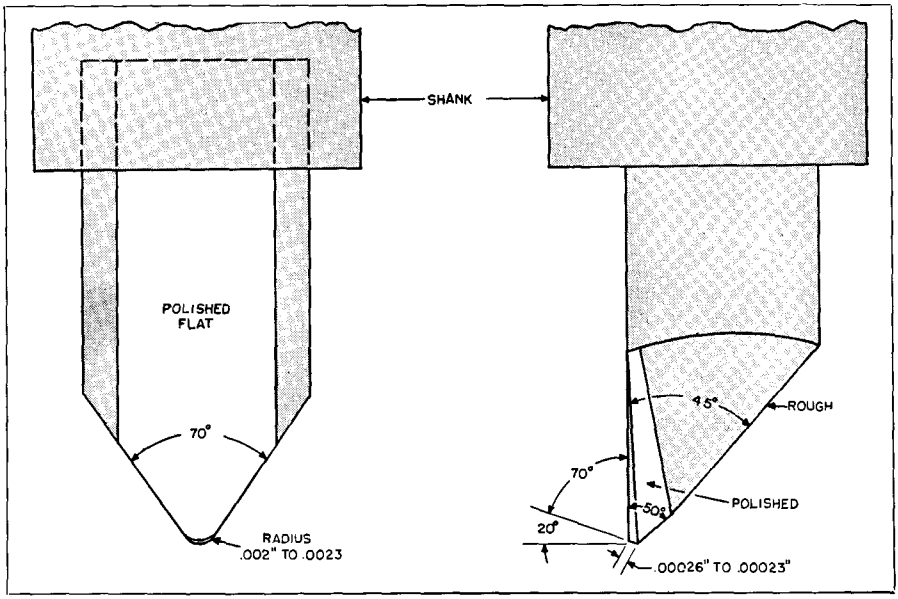

Fig. 7-5. Essential dimensions of sapphire cutting stylus used for lateral recording.

Cutting Angle

The correct cutting angle for the stylus will depend upon the type of head used, the type of material being cut, and the angle on the face of the cutting stylus. If the cutting angle is not correct, there will be an appreciable increase in surface noise. In addition, difficulty will be encountered in controlling the thread or chip as it leaves the record from the cutting process. The result will be high surface noise and squeaking. Many recordists prefer a slight "dig in." This means that the cutting face of the stylus leans slightly forward. Others insist the best results can be obtained only when a slight amount of "dig out" is employed, that is, when the cutting face leans slightly backward from vertical. There is no specific rule of thumb for the correct cutting angle of the stylus. The correct position can be most accurately determined only by cut and try. A test record should be cut without modulation. The unmodulated grooves should be shiny and free from any dullness when viewed in direct light. The record may be played back with a known quality reproducing stylus and the listening test will determine whether or not the cutting has been properly done. If, when played back through an amplifier, there is undue hiss, noise, or squeak on the record, it will indicate that an incorrect cutting angle has been employed.

Usually, with good equipment, a correct cutting angle will be found within two or three degrees of a ninety degree vertical. The cutting angle applies whether the cutting face of the stylus leans forward or backward. It does not depend on whether the face is turned one way or another, that is, from side to side. The cutting face of the stylus is pitched slightly as an aid in throwing the chip toward the center of the record. This pitch angle is rarely more than about two degrees. The normal tendency is for the scrap or chip material to fall to the inside of a revolving disc rather than to the outside, therefore, a slight pitch is employed as an aid in steering the chip toward the center of the disc. The cutting angle or angle which the cutting face makes with the surface of the record is checked by viewing the reflection of the cutting stylus on the shiny surface of an uncut blank (Fig. 7-6) when the turntable is in a stationary position. By looking directly toward the side of the cutter, an imaginary straight line is viewed from the reflection of the stylus both above and below the surface. If there appears to be a continuous straight line, chances are that the stylus is close to the proper vertical position. Any deviation from a straight line will indicate a leaning forward or leaning back of the cutter and its associated stylus. Some manufacturers vary the angle of the face of the stylus considerably. Inasmuch as there are several techniques employed, no specific stylus can be discussed as being the best suited for general recording purposes. It is well to heed the advice of the cutter manufacturer when selecting styli.

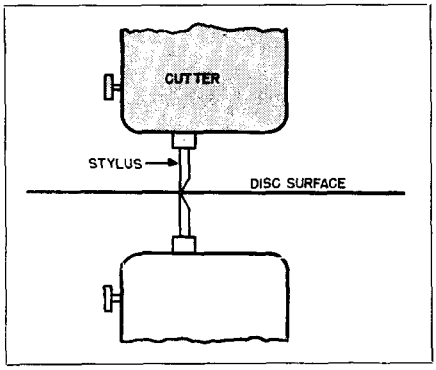

Fig. 7-6. Correct cutting angle of a stylus may be checked by viewing the reflection of the cutting stylus on the shiny surface of an uncut blank when the turntable is in a stationary state.

One high quality stylus has a seventy degree angle and employs a short shank. Another has a ninety degree angle and short shank and is recommended for use with a particular cutting head when recording on acetate-lacquer blanks. If a long shank stylus is used, records will be approximately two decibels louder

for the same recording level but the frequency response will be poor beyond 8000 cps and a severe high frequency peak may develop in this region.

High Fidelity Recording

As mentioned in earlier paragraphs, steel or even tungsten styli can be used but they have a shorter life and are not usually satisfactory for high fidelity work, since in general they produce a groove having a higher noise level. Sapphire styli are recommended for all recording except unimportant tests. A sharp cutting stylus will remove the thread quietly and smoothly. The only noise should be that of the recorder head itself which "talks" audibly during the louder passages. In other words, when test cuts or blank grooves are cut, there should be no tearing or scraping sound. By placing the ear close to the record it is possible to hear the cutting which should sound even in character and have a faint steady hiss. The stylus can be adjusted for minimum noise while operating. The amount of noise heard while cutting a blank groove is a fairly reliable indication of how much surface noise will exist in the finished record. Fig. 7-7 illustrates the effects of stylus condition.

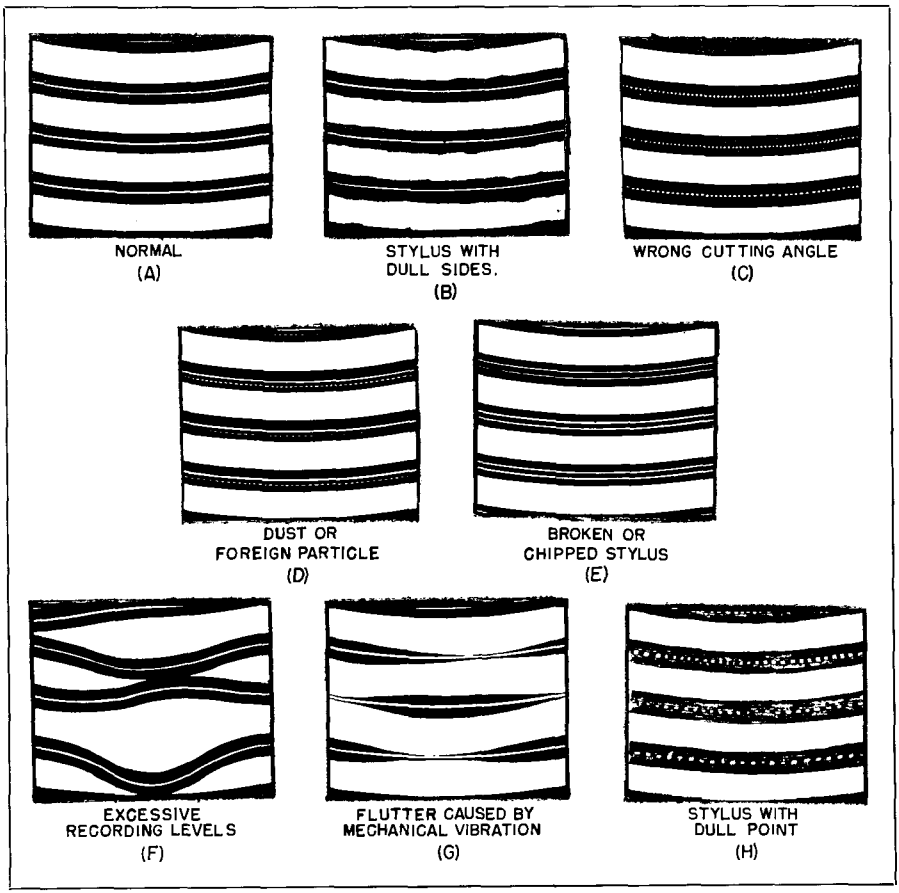

Fig. 7-7. Characteristics of recorded grooves. All except (F) have been cut without modulation. (Courtesy, RCA)

Recording Levels

Considerable experience and skill is required in order for the recordist to obtain top quality results from his recordings. It is not practical to make an exact statement of the correct operating level for any particular recording head or setup. The correct level can be established only by experience and test. There are no fixed boundaries in disc recording representing 100% modulation. At low frequencies the groove spacing limits the possible amplitude of the cutter. At high frequencies the radius of turning of the groove is the limiting factor.

It is not difficult to find the correct operating levels for a complete installation if test cuts of speech and music are made at the same standard record speeds using the smallest contemplated groove diameters. These test cuts should be made at gradually increasing levels and the results should be noted when the records are reproduced. When the reproduction ceases to be acceptable from a quality standpoint, the maximum level has been exceeded. The presence of a very small amount of distortion is sometimes less objectionable than excessive surface noise which is one reason, from a practical commercial standpoint, for not being guided too strictly by measured distortion. It is well to keep in mind what type of equipment will be used to reproduce the recorded material. Only the most advanced type of pickup with a diamond or sapphire stylus should be used if best quality of reproduction with low noise level is desired from acetate type recordings.

Records for 33⅓ rpm cannot be cut at as high a level as records for 78 rpm because of the reduced surface velocity of the record material. It is equally necessary to reduce the recording level at least 6 db. on the 33⅓ rpm discs. A higher level is usually used for 33⅓ rpm lacquer master discs for processing than for recordings where the original is to be played back repeatedly. A high level soft lacquer original will not withstand repeated playbacks. However, the surface noise with these discs is low so that there is no need for the maximum level.

All disc recordings suffer from loss of high frequency response during playback in the area nearer the center of the disc. As the diameter of the record grooves becomes smaller, the condition becomes progressively worse because of the reduction in the linear speed of the recorded groove. With the slower groove speed, the actual linear distance available for a complete cycle of, for example, a 10,000 cps tone, becomes very short. The cutting stylus has a front face which is a flat plane and can record the high frequencies at the slower groove speeds without difficulty. The limiting factor becomes apparent when an attempt is made to reproduce this recording. The reproducing stylus must have a tip of spherical shape. It is obvious that this tip cannot follow a recorded groove whose radius of turning is less than the radius of the stylus tip. It is therefore desirable to confine high fidelity recording to large diameters, dividing the time on two or more discs if necessary for maximum quality. Records having extended frequency range cannot be made at a diameter of less than eight inches for 33⅓ rpm without an extreme loss of high frequency response.

In making high fidelity records, including discs for immediate playback, use can be made of what is known as complimentary compensation. Because of the energy distribution in most speech or music it is possible to accentuate the higher frequencies when making a record and then to attenuate these frequencies by a like amount in reproduction, thereby reducing the surface noise resulting from minute foreign particles in the record stock.

For high quality recordings the frequency rise should begin at about 500 cps and should increase smoothly to a maximum of 16 db. at 10,000 cps. Filters, such as the *RCA* orthocoustic recording filter MI-4916, have been de-

signed for this purpose. In reproduction the inverse of this rise should be employed. Pre- and post-equalization, as this method of compensation is often called, results in a substantial reduction of surface noise. Another form of high frequency compensation involves the use of automatically variable equalizers designed specifically for 33⅓ rpm recording. With these devices the high frequency compensation is progressively increased as the recording groove diameter becomes smaller. The equalizer mounts on the rear of the recorder mechanism and is synchronized with the cutter head so that the amplifier gain is increased at the high frequencies to an amount which is considered a practical maximum.

Flutter

The term "flutter" is used to describe a vertical wave or oscillation which is sometimes cut in the recorded groove. This condition can often be seen as a series of radial spokes or patterns in the record surface. These patterns are usually visible before the record is reproduced although sometimes they may be seen more plainly after playing. When viewed through a microscope, this condition appears as an alternating change in width of the cut groove. Flutter may be caused by a building vibration, low frequency turntable rumble, incorrect stylus angle, or a blank having an unusually wavy surface. Hard spots in a blank will result in a condition similar to that caused by flutter. As the stylus passes over harder and softer portions of the surface, the cutter head is raised and lowered slightly, causing a variation in the depth of groove. This variation should not be mistaken for flutter or oscillation since it is the original action of a well designed and free acting recording head. A distinctive characteristic of hard spots is their prevalence near the outside of the blank. Therefore, variations in groove depth due to hard spots will be more prevalent in this region.

Bouncing

When a valley is encountered when cutting a disc, bouncing will occur due to lack of sufficient pressure from the cutter and stylus. The result is illustrated in Fig. 7-2.

Cutter Adjustments

It is important that the feed screw mechanism be adjusted so that the carriage supporting the recording head travels in a plane exactly parallel to the surface of the turntable in order that the depth of cut will be uniform over the entire record surface. The front face of the stylus, when in the cutting position, should be adjusted to within plus or minus three degrees of perpendicular. Some experiment may be necessary to find the most satisfactory angle for any given surface material. It is advisable not to stop the turntable with the recording head in cutting position since the stylus may cut through the acetate coating to the metal core of the blank. This will chip the cutting edge of the stylus when the turntable is moved or the head raised.

Tests

It is good practice to make surface noise tests from time to time with all of the cutting styli available. This will assist the operator in selecting only those cutters which produce clean, quiet grooves. Present standards require the noise level on lacquer records to be down 50 db. from normal recording level. When checking noise it is necessary to refer the noise level to some standard level. It is suggested that the 1000 cps tone band of a standard tone record be selected as a reference level.

To determine the noise level, connect a high fidelity pickup through a calibrated attenuator to the input circuit of a high gain amplifier. Insert a high pass filter in the circuit to eliminate all frequencies below approximately 200 cps. The electrical location of the high pass filter is important. If two amplifiers are used connected in cascade, the ideal electrical location for the filter is

between the amplifiers. Should it be necessary to use a single unit amplifier, the filter may be connected between the pickup and the amplifier input. Be sure to provide adequate shielding for the filter when using it in this position, however, since the hum pickup may be severe. Connect the amplifier output to a loudspeaker and a volume level indicating meter. Play the 1000 cycle tone band and then the noise sample. Adjust the output of the amplifier with a calibrated attenuator until a similar indication is obtained on the volume level indicating meter. The attenuator reading indicates directly the noise level in db. below reference level.

A convenient method for determining the presence of noise or scratch consists of connecting the cutter head as a reproducer. Insert the stylus to be checked in the cutter head and connect the leads from the head directly to the input terminals of the high gain amplifier which has a loudspeaker connected to its output terminals. Cut grooves in the record material, preferably near the outside diameter. Arrange the gain of the amplifier sufficiently to hear the sound made by the cutter. A steady hiss indicates a good grade of lacquer and sharp, properly adjusted stylus. Scratching, squealing, or tearing sounds indicate a dull or improperly adjusted stylus. Clicking or banging may indicate the presence of foreign particles in the lacquer.

Groove Spacing (Excluding LP)

The correct groove width is largely determined by the radius of the tip of the playback stylus, and by the signal level at which the recording is made. The groove should be wide enough so that the playback stylus tip contacts the side walls of the groove approximately 0.5 mil below the surface of the record. Then ordinary light surface scratches will not be reproduced and will not add to the over-all record noise. Most lateral transcription pickups use styli which have tip radii between 2.3 and 2.5 mils. In order to obtain the proper fit, a groove width of 4.5 mils or greater is recommended

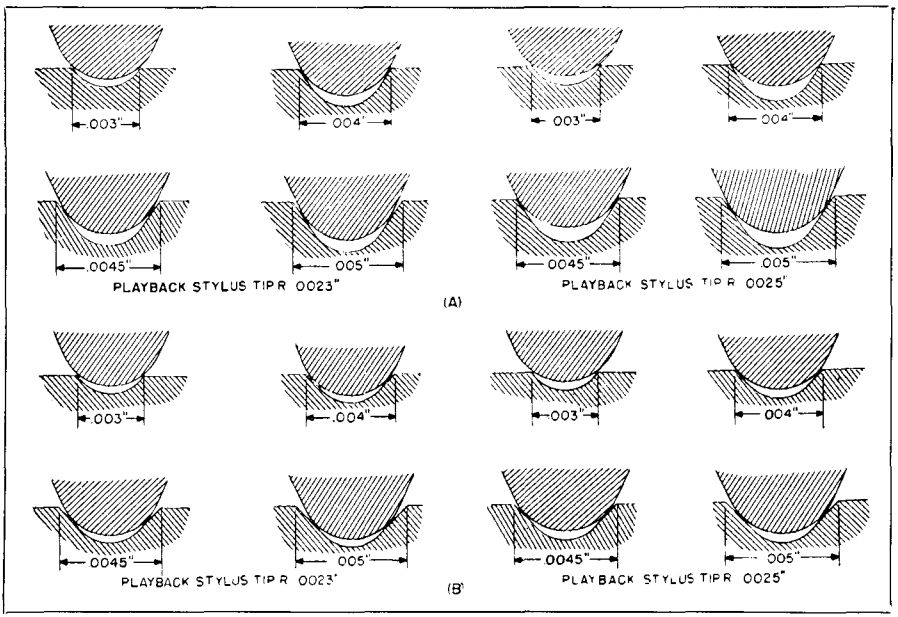

Fig. 7-8. Theoretical seating of stylus in grooves of various widths. (A) Grooves cut with 70° stylus, (B) grooves cut with 90° stylus. (Tip radius .0017") (Courtesy, RCA)

Grooves Per Inch	Combined Width of Groove & Wall	Groove Width		Wall Width		Groove Depth			
						70° Stylus		90° Stylus	
		From	To	From	To	From	To	From	To
96	.0104	.0052	.0042	.0052	.0062	.0022	.0015	.0018	.0013
112	.0089	.0044	.0036	.0044	.0053	.0017	.0011	.0014	.0010
120	.0083	.0041	.0034	.0041	.0049	.0014	.0009	.0012	.0009
136	.0073	.0036	.0029	.0036	.0044	.0011	.....	.0010	.....
154	.0065	.0032	.0026	.0032	.0039	.0008	.....	.0008	.....

Fig. 7-9

for cutting styli having either a 70 or 90 degree included angle. Fig. 7-8 illustrates the theoretical fit for various sizes of playback styli and groove widths. The tip radius of the cutting stylus should be 0.4 or 0.5 mils less than that of the playback stylus so that the bottom of the record groove is cleared and does not form the major support for the reproducing tip.

To determine the pitch (number of grooves per inch) at which the record is to be cut, add to the groove width twice the maximum amplitude of expected stylus excursion (due to signal) plus an allowance for safety factor. Assume a normal stylus excursion of 0.626 mils and a maximum of 10 db. above this or 1.98 mils. Twice this is 3.96 mils plus a safety factor of 1.0 mil added to a groove width of 4.5 mils equals 9.46 mils, or about 109 grooves per inch. Low frequency peak amplitudes of 10 db. above normal are infrequent and it is questionable if two maximum stylus excursions will occur in adjacent grooves at such time and phase as to cut into each other. Therefore, some liberty can be taken and a slightly smaller pitch, about 7.35 mils or 136 grooves per inch, is usually considered satisfactory when using a 70 degree cutting stylus.

The groove width should, however, never be less than 4.5 mils when a playback stylus with a 2.3 or 2.5 mil tip radius is used.

The tabulation (Fig. 7-9) shows the practical limits of groove and wall widths. All dimensions are in inches.

Special consideration is required in the design of styli for Columbia LP and *RCA* systems. Data on these new techniques is included in Chapter 6 on Microgrooves.

A lacquer recording stylus of modified design is now available which offers several advantages in the recording of high quality discs[1], particularly originals from which pressings are to be obtained. This modification relates to the burnishing facet which is an important part of the standard lacquer recording stylus.

Burnishing Facet Angle

The single burnishing facet of the standard stylus is usually polished at an angle of 25° to the side walls of an unmodulated groove (Fig. 7-10). In a dead groove this angle remains constant and burnishing action is steadily effective. When the groove is modulated, however, the stylus is carried on excursions of varying direction and slope from the axis of an unmodulated groove, causing radical changes in the angular relationship between the burnishing facet and its adjacent groove wall.

A study of the cross-section of such a stylus in grooves of varying slope is essential to an understanding of the effect modulation has upon the ability of the burnishing facet to polish the groove. By this means it is readily

[1]Isabel L. Capps, "The Design of a New Lacquer Recording Stylus" Audio Eng., Jan. 1948, pp. 18-20.

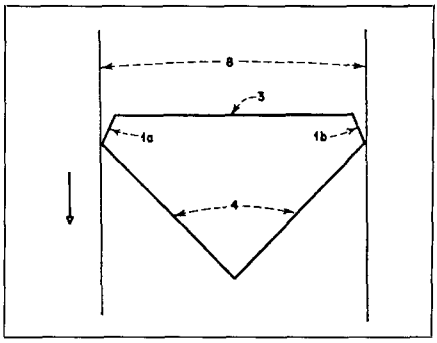

Fig. 7-10. Cross-section of standard lacquer recording stylus in unmodulated groove. Burnishing facets (1a and 1b) form 25° angles with groove walls (8). Arrow shows direction of record travel. Other facets: Cutting face (3) and clearance faces (4). (Courtesy, F. L. Capps)

seen that the burnishing angle is reduced on one side of the groove and increased on the other according to the direction of the stylus excursion (Fig. 7-11). For example, a groove slope of 20° finds one facet now forming a 5° angle to the adjacent groove wall while the other forms an angle of 45° with its adjacent groove wall. Under these conditions both walls are effectively polished.

When the groove slope exceeds the angle of the burnishing facet, however, the facet on the side where the angle is diminished will not be able to burnish at all since it presents only a sharp point to the adjacent groove wall (Fig. 7-12A). The unpolished wall of such portions of a modulated groove will result in noise patches upon subsequent playback. This noise modulation will be particularly noticeable in the record because it occurs on the side of the groove

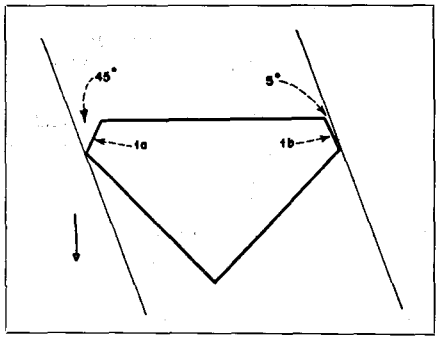

Fig. 7-11. Cross-section of same stylus in groove with 20° slope. Change in angular relationship between burnishing facets and groove is shown. Facet 1a forms angle of 45° with adjacent groove wall. Facet 1b on opposite side of stylus forms angle of 5° with its adjacent wall. In this and subsequent illustrations groove slopes in the opposite direction will merely reverse the effects described. (Courtesy, F. L. Capps)

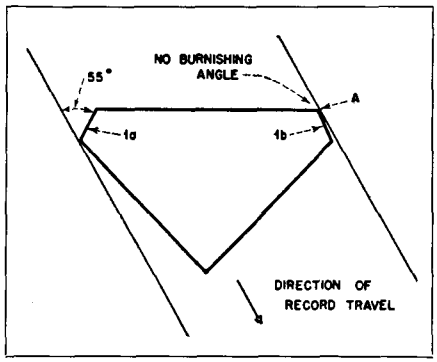

Fig. 7-12A. Same stylus cross-section in groove whose slope is 30°. Burnishing facet 1a forms angle of 55° with adjacent wall. Facet 1b cannot burnish with groove slope in excess of its basic angle. In fact, the edge formed by the meeting of cutting face and burnishing facet (A) will tear the adjacent groove wall. (Caurtesy, F. L. Capps)

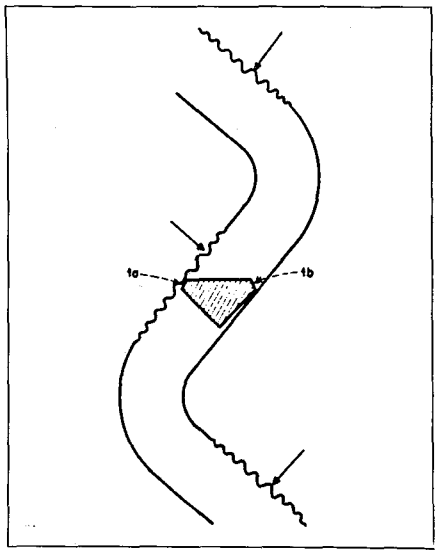

Fig. 7-12B. Diagram of a highly modulated groove showing areas (arraws) which will be rough where the burnishing facets (1a and 1b) cannot function properly. (Courtesy, F. L. Capps)

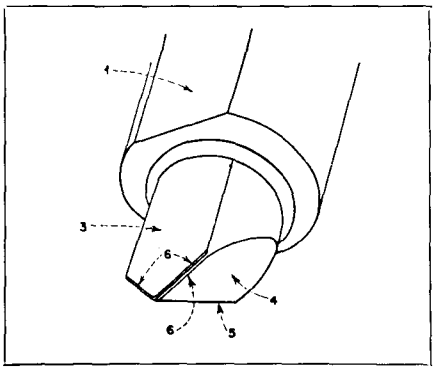

Fig. 7-13A. Lower portion of a stylus having two burnishing facets along the cutting edge. The figures represent parts as follows: 1—shank; 3—cutting face; 4—clearance face; 5—black edge formed by meeting of clearance faces; 6—burnishing facets. (Courtesy, F. L. Capps)

which more positively drives the playback stylus (Fig. 7-12B).

The above condition could be remedied by increasing the angle at which the burnishing facet is originally ground. To do so, however, would be to increase the angle between the facet and wall on the opposite side of the groove to a dangerous degree. Shearing action takes place at an angle of 90°, the relationship of the cutting face to the record material. It follows that any burnishing facet increased by groove slope to 60° or more will tend to become a cutting face and will tear rather than polish the groove wall.

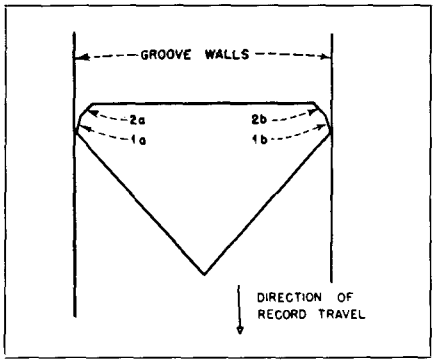

Fig. 7-13B. Cross-section of stylus shown in Fig. 7-13A in an unmodulated groove. The trailing facets 1a and 1b form burnishing angles of 15° with adjacent groove walls. (Courtesy, F. L. Capps)

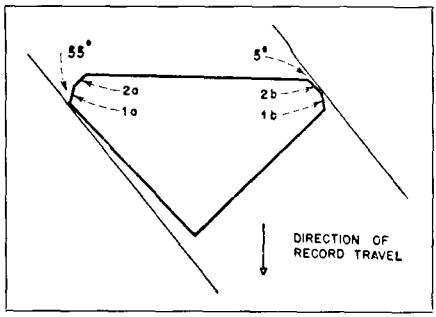

Fig. 7-14. Cross-section of same Anti-Noise Modulation Stylus in a groove whose slope is 40°. Leading facet 2b functions at an angle of 5° on the side where groove slope diminishes the burnishing angle. Facet 1a burnishes the opposite wall at 55°. (Courtesy, F. L. Capps)

Moreover, mastering levels frequently produce a groove slope of 40° or more. It would be necessary to grind the single facet at an angle of 45° in order to burnish such a groove on the side where the angle is diminished. This same groove slope would then increase the burnishing angle on the opposite side of the groove to 85°. It is clearly impossible, therefore, to grind a single burnishing facet at any angle which will guarantee effective polishing of both groove walls at the same time regardless of the direction or slope of the groove.

A modified stylus design[2] which provides multiple burnishing facets rather than one along the cutting edge offers a positive solution to the problem of burnishing angle at mastering levels. The facets of this stylus are polished at different angles so that the groove slope naturally selects the facet which has an effective burnishing relationship to the adjacent groove wall. In the case where two facets are provided, for example (see Figs. 7-13A and 7-13B) the leading facet may be polished at an angle of 45° and the trailing facet at an angle of 15° in relation to the walls of an unmodulated groove. A groove slope of 40° would therefore find the leading facet operating at an angle of 5° on one side and the trailing facet at

[2]Capps and Cook, Patent applied for.

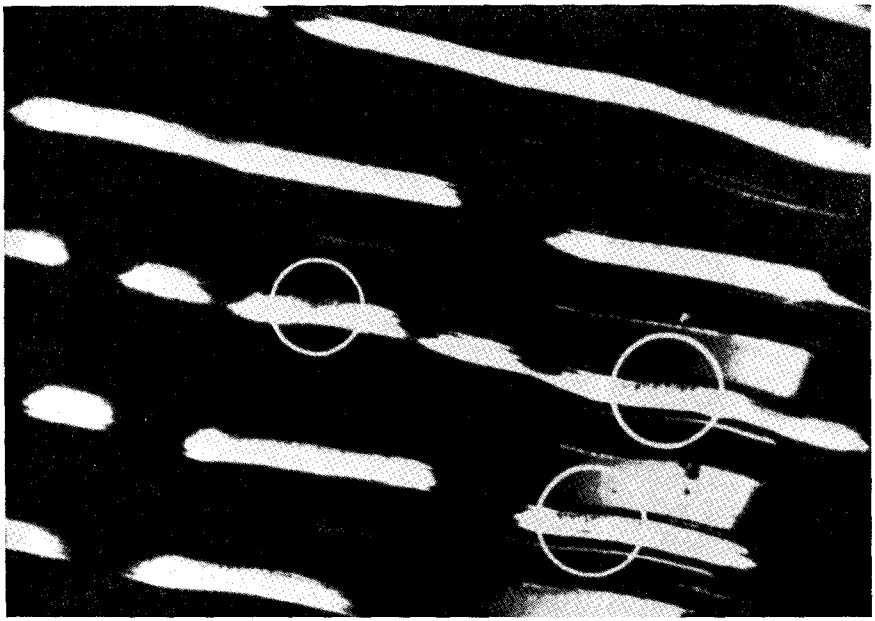

Fig. 7-15A. (below) Noise modulation in sidewall is not hard to see with a low-power microscope when properly lighted. (Courtesy, F. L. Capps)

55° on the opposite side (Fig. 7-14). These angles may be changed to 50 and 10 degrees respectively so that even a groove slope of 45° will result in the same effective relationship between burnishing facets and groove walls.

That noise patches are effectively eliminated by styli of this modified design is illustrated in Fig. 7-15. Here actual photographs reveal the rough area left in a highly modulated groove cut with a single-faceted stylus (A)

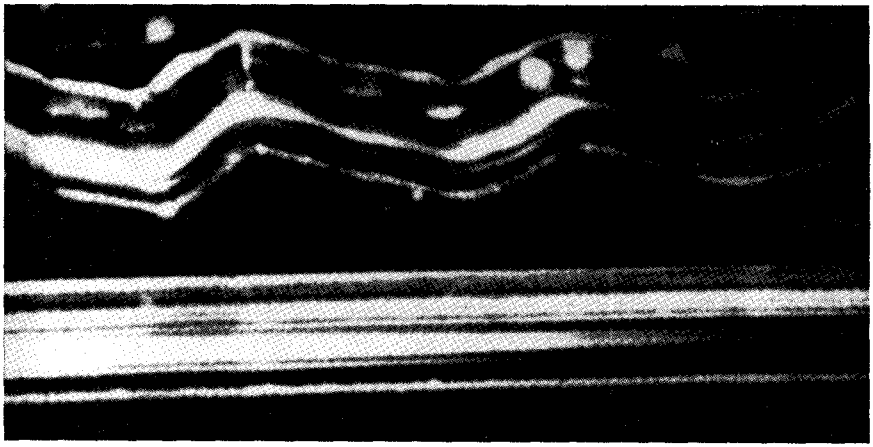

Fig. 7-15B. A record made with an anti-noise-modulation stylus shows no egregious sidewall speckling even with 40° excursions. Special microscope lighting must be arranged to produce sidewall illumination because the anti-noise-modulation stylus produces such a high polish. Although halation occurs in some spots, due to lack of retouching, direct viewing with the microscope eyepiece coupled with movement of the light sources discloses no unburnished sidewall areas. (Courtesy, F. L. Capps)

and the absence of such rough areas in a similar groove cut with a multi-faceted (B) stylus.

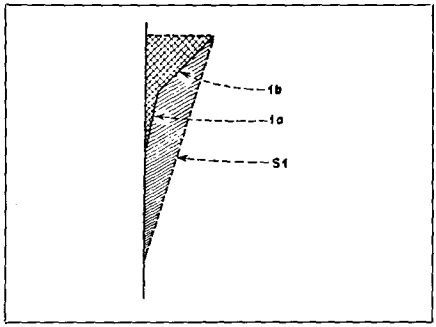

Fig. 7-16. Enlarged view showing comparatively large width of a standard (0.0005) single facet (S1) in contrast with the small aggregate widths of the double facets (1a and 1b), each of which is 0.0001″. Crass-hatched section shows amount of groove material that will be displaced by double-faceted stylus. This area plus shaded portion of the above stylus constitutes mass that will be displaced by single-faceted stylus. (Courtesy, F. L. Capps)

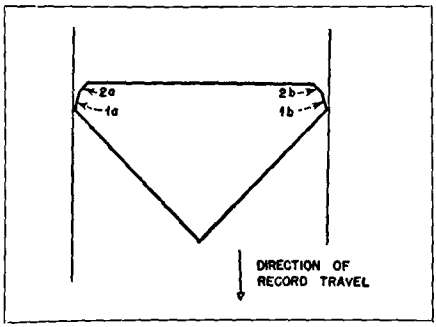

Fig. 7-17. Crass-section of an Anti-Noise Modulation Stylus having the leading facet 1a and 1b 0.0002″ in width; and trailing facet 2a and 2b 0.0001″ wide. (Courtesy, F. L. Capps)

Other Features

The new stylus is called an Anti-Noise Modulation Stylus but its geometry provides additional benefits which largely overcome other limitations imposed upon the single burnishing facet.[3] Each of the two facets illustrated in Fig. 7-13 may be so small that their aggregate dimension is less than the width of the standard single facet (Fig. 7-16). Due to the wide difference in the angle provided, each facet may work independently of the other so that its own width is the only structural impedance offered to the registration of high frequencies. Distortion caused by wider single facets is also reduced since the smaller facet displaces less material in its polishing action with less subsequent restoration of the groove wall.

Variations Possible

Three types of styli embodying the principles of this modified design have been used with highly satisfactory results. The first two provide double facets of 50 and 10 degrees respectively

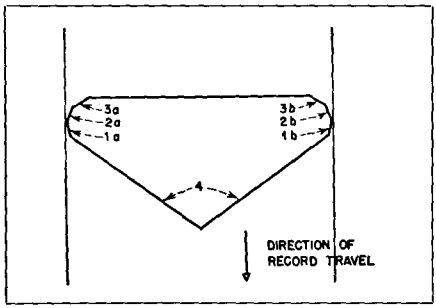

Fig. 7-18. Cross-section of an Anti-Noise Modulation Stylus provided with three burnishing facets, each 0.0001″ wide. The leading facet (3a-3b) is polished at an angle of 60°; the middle facet (2a-2b) at 25°; the trailing facet (1a-1b) at minus 10°. The clearance faces (4) are polished at 35° to provide additional clearance in 45° groove slopes. (Courtesy, F. L. Capps)

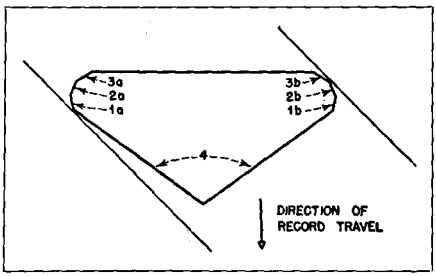

Fig. 7-19. Stylus cross-section of Fig. 7-18 in a groove slope of 45°. Here facet 1a (polished at minus 10°) burnishes the adjacent groove wall at 35°. On the opposite side leading facet 3b (polished at 60°) burnishes its adjacent groove wall at 15°. (Courtesy, F. L. Capps)

[3]Isabel Capps "Recording Styli" Electronic Industries, Nov. 1946.

as illustrated in Fig. 7-13. However, in one the facets are equal in width, each being 0.1 mils wide. The other enlarges the leading facet to 0.2 mils (Fig. 7-17) thereby enabling it to give a higher degree of polish to the groove wall which drives the playback stylus.

The third variation provides three burnishing facets along the cutting edge as follows:

A leading facet polished at 60°, a middle facet at 25°, and a trailing facet at minus 10°, all angles given in relation to the side wall of an unmodulated groove (Fig. 7-18). The advantage here lies in the fact that even a groove slope of 45° increases the burnishing angle between the rear facet and its adjacent groove wall only to 35° (Fig. 7-19), a more effective burnishing angle than the 55° resulting from the first two types.

Method of Rating Noise Factor

To the stylus itself, an excursion of any slope is the equivalent of being twisted to that degree in the cutting head while making an unmodulated groove. This method has been temporarily adopted therefore to measure the factor of merit,[4] (noise below a signal of 10 c/s) in styli having multiple facets. Comparative readings in round figures of typical styli of both the single and multi-facet type are given in the chart on this page.

The readings given reveal the advantage enjoyed by the Anti-Noise Modulation Stylus when degrees of groove slope common at mastering levels are reached. As stated, the figures are given in round terms but accurately represent the average of many styli of both types.

Full appreciation of the improved quality obtainable with the Anti-Noise Modulation Stylus must come with its use. There are probably almost as many ways of determining what constitutes a "good stylus" as there are recording technicians. Some judge the stylus entirely by its shadowgraphed outline. Some make test cuts, unmodulated, on the outside diameter of the disc at 78 rpm. If the groove is "quiet" (virtually inaudible at full gain) and the flash lines parallel to the groove axis are shiny and unbroken, the stylus is considered good. Others apply the same criterion but make the test cuts at 33⅓ rpm at diameters of from 5 to 6 inches. Still others inspect a groove under the microscope and, unless it is jet black in color, the stylus is rejected. A few ask for the best possible conditions in the aforementioned respects with burnishing facet dimensions which allow higher frequency registration and low distortion.

As shown by the chart, readings on unmodulated grooves show the new stylus to be 5 vu noisier than the old stylus. It is the modulated noise which is most important to the record, however, and here a multi-faceted stylus produces readings at least 15 to 20 vu better than those obtained with the single-faceted stylus.

[4]Emory Cook, Audio Eng., Dec. 1947.

COMPARATIVE READINGS OF TYPICAL STYLI

Stylus Type	Diameter	RPM	Normal Position	Offset 30°	Offset 40°
Regular stylus (single facet)	16″	78	–55	–25	off scale
	16″	33⅓	–60	–20	off scale
	7″	78	–60	–20	off scale
	7″	33⅓	–55	–20	off scale
Anti-Noise Modulation Styli (two facets)	16″	78	–50	–40	–25
	16″	33⅓	–52	–40	–25
	7″	78	–50	–35	–20
	7″	33⅓	–48	–35	–20

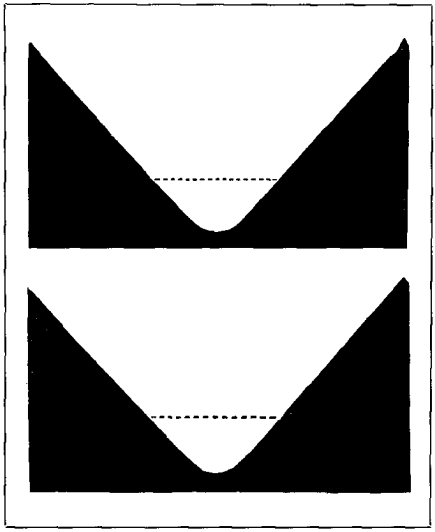

Fig. 7-20 and Fig. 7-21. Contact prints of shadowgraphed two-faceted styli. The dotted line indicates the functional portion for 100 lines per inch and consequently the portion below this line will be the resultant groove shape. Deviation from "ideal" shape lies in the fact that in Fig. 7-20 the radius does not blend perfectly with the angle on one side. (Courtesy, F. L. Capps)

Again the groove will not necessarily be jet black. It will have a high luster, however, and provided the record material is free from foreign particles, the flash lines will be shiny and uninterrupted, even when modulation is at mastering level.

Finally, the shape will not necessarily be as perfect as in the case of the Master stylus. The size and angle of the burnishing facets are of utmost importance to the recording and manufacturing tolerance and must favor these factors above ideal shape. Figs. 7-20 and 7-21 are photographs of such styli. No processing difficulties or poor playback fit will result from grooves having the contour of either one of these styli.

V-Groove Recording Styli

A great deal of experimental work has been done in recent years to improve the stylus performance in disc recording. With the trend from making masters on wax to lacquer—the stylus has undergone considerable alteration. Laterally cut records produced since about 1900 can be played satisfactorily with a .0025 (2.5 mil) reproducing needle, Fig. 7-22. Microgroove (LP) and 45 rpm records must be played with a much smaller needle with tip radius of .001″ (1.0 mil).

Phonograph records, in the past, have had grooves shaped in profile like the letter U and covered in previous paragraphs. With grooves of such profile shape it has been necessary to use a reproducing needle so large that it cannot accurately follow the intricate detail of music. The V-groove, by its shape, Fig. 7-23, allows the use of a small sized needle which, at 78 rpm, allows good reproduction to 20,000 cycles.

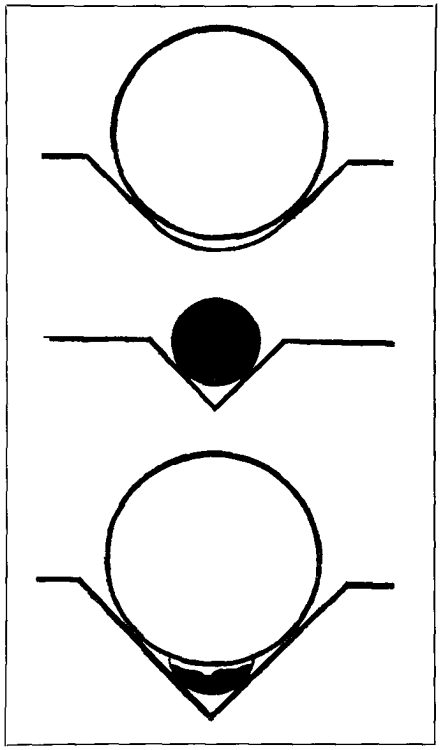

Fig. 7-22. Nearly all laterally cut records produced since 1900 can be played satisfactorily with a 2.5 mil stylus (top). Microgroove and 45 rpm records must be played with a stylus having a 1.0 mil tip (center). Standard depth records cut with V-groove ANM styli can be played back with either 1.0 or 2.5 mil styli (bottom).

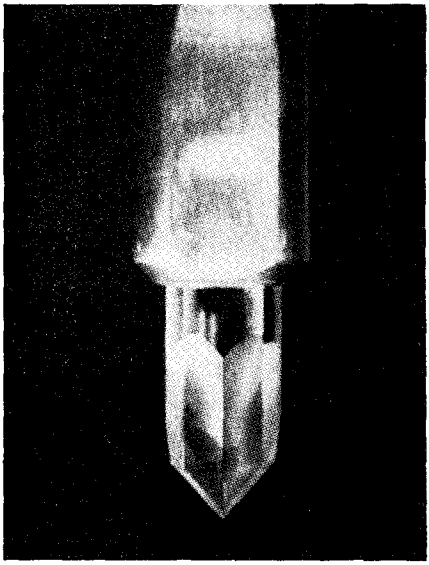

Fig. 7-23. Detail photo of the ANM V-groove stylus. (Courtesy, F. L. Capps)

The new stylus, developed by the *Frank L. Capps & Co.*, known as the V-groove III is now widely used. It has three facets; the leading one 35°, middle 25° and the trailing facet minus 25°. It is also used as a "thermo" stylus with excellent results and is ideally suited to microgroove recording.

Columbia "Hot Stylus" Recording

A development,[5] undertaken in the laboratories of *Columbia Records Inc.*, makes possible the cutting of lacquer discs with very low background noise and a minimum of high-frequency response loss. All of the advantages which formerly were peculiar to wax are realized, without sacrificing the convenience and utility of lacquer discs for direct playback and processing.

Conventional Lacquer Styli

When "instantaneous" lacquer coated recording blanks were introduced, it was noticed that cutting styli of the type used for cutting wax would give a granular noisy cut. For this reason, special cutting styli were developed for use with them. In these special cutting styli, the cutting edge is "dubbed" in a particular way, usually by the provision of one or more burnishing facets, discussed in previous paragraphs, on the leading edge of the tool (as illustrated by Fig. 7-24). Extremely quiet cuts are readily obtained with such styli.

In the playback of records cut on lacquer discs with these styli, it was noted that the high-frequency response dropped off progressively as the groove velocity decreased. The loss was quite severe at the inner diameters of 33⅓ rpm records. This loss of high frequencies generally was charged to the reproducer—not without reason, for at the time lacquer discs were introduced, most reproducers required bearing forces upon the record of several ounces and had very high needle-point impedances as well. Some reproducing tables were produced having automatic equalizers which increased the high frequency response as the arm moved toward the center of the record to compensate for this so-called "playback" loss.

This loss of high frequencies was still evident when modern reproducers, having low needle-point impedance and

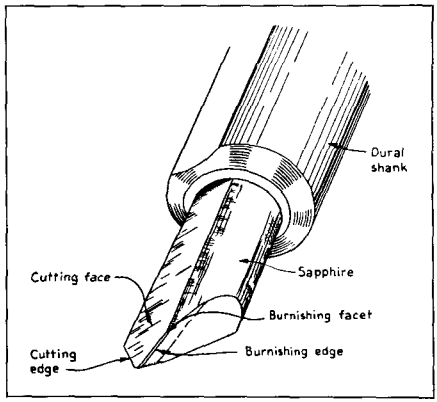

Fig. 7-24. Perspective view of the lacquer cutting stylus. (Courtesy, Columbia Records)

[5]William S. Bachman, "The Columbia Hot Stylus Recording Technique" Audio Eng., June 1950, pp. 11-13.

low force upon the record, were substituted for the older types. It was occasionally charged that the size of the reproducer tip was too great to trace the short wavelengths. This would seem to be plausible since reproducer-tip radii of .002″ to .0025″ were commonly used, and the wavelength of a 10,000-cps tone at 11½″ diameter and 33⅓ rpm is only .002″. A rigorous examination of the geometry in reproducing disc records[6] shows that below the critical amplitude of the recorded wave, where the radius of curvature of the wave is equal to the reproducer-tip radius, there is no theoretical limit to the frequency which may be traced successfully with a given reproducer-tip radius. It is only necessary that the displacement be limited to values less than the critical amplitude. The critical amplitude varies inversely with the square of the frequency, but even so, quite large values of recorded velocity may be reproduced. For instance, consider the example of the 10,000-cps wave at 11½″ diameter, 33⅓ rpm, traced with a .002-in. tip radius. (The effective tip radius at the point of contact with the groove depends upon the included angle of the groove as may be seen by reference to Fig. 7-25. If the .002″ figure above is considered as the radius at the point of contact in a 90° groove, the actual physical size of the stylus tip would be .0028″). The peak recorded velocity at critical displacement would be 3.2 in./sec. which is far greater than the probable level of 10,000 cps in program material, even with 100-microsecond pre-emphasis.

[6]J. A. Pierce and F. V. Hunt, "On Distortion in Sound Reproduction from Phonograph Records, "J. Acous. Soc., Am., July 1938.

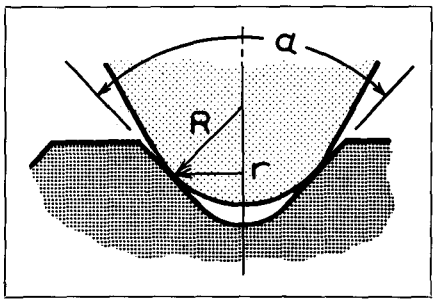

Fig. 7-25. Cross-sectional view of reproducing stylus in contact with record groove. (Courtesy, Columbia Records)

Measurement Technique

In a study which was undertaken to separate the possible causes for the observed loss of high frequencies, it was first necessary to settle on the means by which the loss might be measured. The *Buchmann-Meyer* optical method of measuring the width of the reflected light pattern (see Chapter 30) was considered as a means of indicating the recorded velocity. This has the obvious advantage that possible deformation of the recorded wave due to the reproducer is avoided. While good agreement has been obtained between the light pattern and measurements made with a carefully calibrated reproducer at high groove velocities, of the order of 40 in./sec., considerable disparity is encountered at low groove velocities.

At these low velocities, it is usual for the pattern to show differing widths on opposite sides of the center. The two widths are usually averaged to obtain the apparent velocity. The disparity between the two values which are averaged indicates a rather large area of uncertainty, which throws some doubt on the reliability of the method. It is possible that waveform distortion components may account for some of the disparity, or that the "horns," the small ridges which are often thrown up above the plane of the uncut record on both sides of the groove, may affect the pattern. The groove cross section in Fig. 7-26 shows these horns clearly. *Roys,*

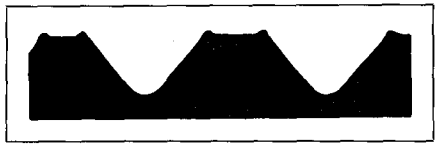

Fig. 7-26. Cross-section of groove showing how horns are thrown up on upper edges of groove walls. (Courtesy, Columbia Records)

in a paper delivered before the IRE convention in New York in March 1949, pointed out that better agreement between the *Buchmann-Meyer* pattern and other types of measurement were obtained when the light pattern was taken from the matrix which was used to press the record under consideration. This might have some connection with some observations in which the depth of modulation appeared to vary with the size of the reproducer tip used. A "V" type of groove was used, and the observations were made at frequencies and amplitudes chosen so that the tip radius was not more than one fifth of the minimum radius of curvature of the recorded wave.

In view of the foregoing, and on the premise that a record is made more to be played than to be looked at, it was decided to take all of the high-frequency loss data by playback response measurements, using a variable-speed-turntable-calibrated reproducer. This measuring technique is very thoroughly described by Haynes and Roys.[7]

[7]"Calibration of Disc Recording Pick-ups" Proc. I.R.E., March, 1950. Vol. 38, No. 3.

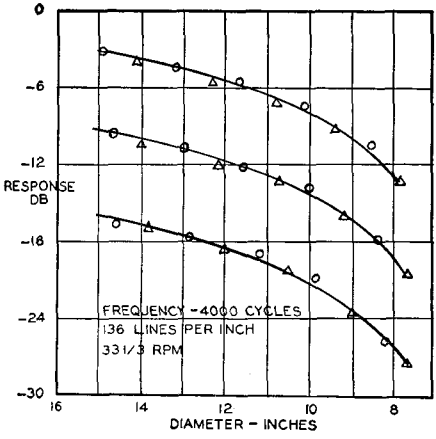

Fig. 7-27. Curves of playback response of 4000 cps tone vs. diameter for three values of channel input level. The shape of the three curves is similar and the output is a linear function of the input within the probable error of measurement.

High-Frequency Response

In 1946, experimental frequency records were cut with varying input levels, all below the critical amplitude (where the minimum radius of curvature of the recorded wave equals the reproducer-tip radius). The playback response to some of these test records is shown in Fig. 7-27. It was thereby determined that the playback response was proportional to the input and that the shape of the curve of response vs. frequency was not altered with change in level below this critical value. This indicates also that the effective impedance of the cut groove at the point of contact with the reproducing stylus is either constant, regardless of amplitude level below the critical value, or sufficiently high to be unaffected by the needle-point impedance of the reproducer.

Additional test records were cut using a wide range of frequencies over a large number of diameters. Plotting the playback response level from them against the wavelength of the recorded wave showed that the same shape of curve would result for a particular recording stylus and disc material, regardless of the frequency employed, with one important exception. This exception applies to frequencies in the neighborhood of the resonant frequency, or frequencies, of the cutter. At resonance the cutting point impedance reaches its lowest value, and in many cases it becomes low enough to be affected by the impedance of the record material being cut. To get good data, therefore, it was necessary to use a cutter having high mechanical impedance or to monitor the motion of the recording stylus by means of an FM calibrator or the equivalent. The wavelength of a constant-frequency tone varies with the diameter at which it is cut, assuming that the rotational speed is constant. For this reason, the same wavelengths were obtained at several frequency and diameter combinations of the various test records used. The overlapping regions of the playback level vs. wavelength curves coincide when corrections for the various levels

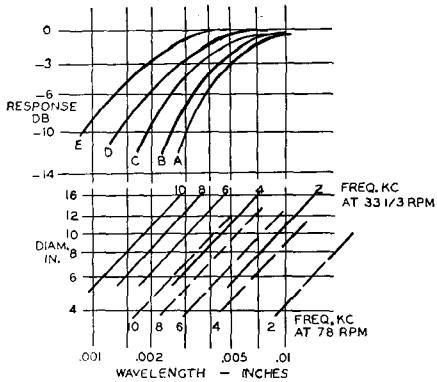

Fig. 7-28. Playback response vs. wavelength of recorded waves. The lower family of curves relates the wavelength to the frequencies and diameter of records turning at 78 and 33 1/3 rpm.

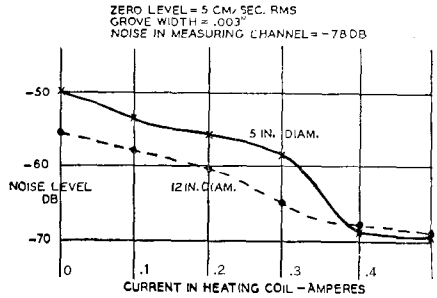

Fig. 7-29. Curve showing noise level in unmodulated groove vs. current in stylus heating coil. The noise is measured with a playback channel having uniform velocity response over a frequency band extending from 500 to 8000 cps.

used in the several test cuts are made. The resulting curve of response vs. wavelength for a particular stylus and material is a smooth one, having remarkably similar shape to the $\frac{\sin x}{x}$ curve which describes aperture loss in optical and magnetic recording.

Several response vs. wavelength curves are shown in Fig. 7-28. Below the curves are additional plots which indicate wavelengths in terms of the frequency and diameter of records turning at 78 and 33⅓ rpm. It is seen from these plots that the "wavelength" loss is more severe with "dubbed" styli and is affected very considerably by the mechanical properties of the material being cut. If a comparison is drawn with the aperture effect mentioned above, the effective gap or aperture appears to be quite large, similar in effect to that obtained when a magnetic tape is being held at a fixed distance away from the pole faces.

Heated Stylus Performance

On the theory that the burnishing facets on the recording styli were producing heat through friction to "flow" a smooth surface on the cut groove, it was proposed that the stylus be heated by other means. The first method tried, in early 1948, consisting of winding a small coil of copper wire directly on the sapphire jewel and heating it with a direct current, worked so well that it is still in use, although many other means have been considered. The effect of this heat on the reduction of the groove noise was so pronounced that it immediately became apparent that much smaller, or possibly negligibly small, burnishing facets could be used. This also was found to be true, the styli with smaller facets requiring more heat to get roughly the same background noise.

Fig. 7-29 is a plot of the noise of a cut made with a sharp edge cutting stylus with varying heating currents applied. The noise was measured on a velocity basis over a band extending from 500 to 8000 cps. The 500-cps limit was chosen to eliminate hum and rumble vibration from the measurement, and the 8000-cps upper limit was chosen to avoid response in the region where the dynamic mass of the reproducer at the stylus tip might resonate with the compliance of the groove which it engages. Since these measurements were made on a velocity basis, it is evident that a further reduction in the measured noise would be obtained with roll-off of the high frequencies, such as that used to equalize for pre-emphasis in recording. Even so, reductions of as much as 18 db. in the background noise are readily effected, giving a resulting noise level 68

db. below the NARTB standard recorded program level.

The actual temperature attained by the stylus was not measured, but, based on the resistance of the coil, the power supplied is in the order of one watt. With values of current in the order of 0.4 to 0.5 amperes, the heat is sufficient to give equivalent results with respect to noise and high-frequency response loss over a wide range of lacquer material. The high-frequency loss data obtained with heat of this order agrees very closely with curve E of Fig. 7-28.

CHAPTER 8

The Decibel (Volume and Power Level Meters)

A study of the decibel (db., vu, dbm.) its definition, how used, and how calculated.

● The measurement of gain in an amplifier or loss in a transmission line or attenuator circuit is usually expressed in db. (decibels) rather than in watts or volts. The reason for this is the fact that the human ear responds to intensities of sound logarithmically rather than linearly.

A sound having 10 watts of power is 10 times as loud to the ear as a sound of 1 watt or a sound of 100 watts is 10 times as loud as a sound of 10 watts but only 20 times as loud as a sound of 1 watt.

A sound of 1000 watts (1 kilowatt) is 20 times as loud as a sound of 10 watts or 30 times as loud as a sound of 1 watt. We must, therefore, use a "mental yardstick" having a logarithmic scale and not the usual rule.

The standard transmission unit is the decibel (abbreviated db.) and is equal to one-tenth of a bel. Nominally, it supersedes the *TU* (transmission unit), although specifying exactly the same thing as the latter term. The bel, named in honor of Alexander Graham Bell, was adopted by an international convention of telephone engineers.

The decibel is a logarithmic expression of a ratio between two quantities. As a unit of measurement, it specifies no definite amount of current, voltage, power, or sound but represents merely a ratio between two magnitudes. It is therefore a relative unit. Since the db. is a logarithmic unit, successive gains or losses expressed by it may be added algebraically.

The db. may express a ratio between two values of either current, voltage, power, or sound energy. It thus becomes possible to determine the db. gain for a given amplifier from ratios that express either voltage, current, or power amplification. Gain is expressed as *plus* db., loss as *minus* db.

While the decibel may show gain or loss with respect to the power at some point in a system, it properly has no regard for the finite value of any reference power. However, it is accepted practice in some radio and telephone measurements to designate the power level of 0.006 watt (6 milliwatts) as *zero* db. and to express any other value of power as a certain number of db. above or below this reference level. Hence, the expression "db. up" and "db. down." (See Fig. 8-1.)

Determination of Ratios

Ratios are common to everyday scientific ratings. They express relative superiority, or inferiority, gains or losses in a concise and readily understandable manner. We state that a certain transformer permits a voltage step-up of 2 to 1, etc. Such simple ratios might easily be converted into convenient statements of db. gain and db. loss.

POWER LEVEL (db.)	VOLTS 500 OHM LINE	POWER WATTS 0 db. = 6 mw.
—20	0.1730	0.00006
—19	0.1990	0.00007
—18	0.2180	0.00009
—17	0.2340	0.00011
—16	0.2730	0.00015
—15	0.3000	0.00018
—14	0.3390	0.00023
—13	0.3890	0.00030
—12	0.4450	0.00039
—11	0.4860	0.00047
—10	0.5477	0.00060
— 9	0.6145	0.00070
— 8	0.6895	0.00090
— 7	0.7737	0.00110
— 6	0.8681	0.00150
— 5	0.9740	0.00180
— 4	1.0928	0.00230
— 3	1.2262	0.00300
— 2	1.3758	0.00370
— 1	1.5437	0.00470
0	1.7321	0.00600
+ 1	1.9434	0.00750
+ 2	2.1805	0.00950
+ 3	2.4466	0.01190
+ 4	2.7451	0.01500
+ 5	3.0801	0.01890
+ 6	3.4559	0.02380
+ 7	3.8776	0.03000
+ 8	4.3507	0.03800
+ 9	4.8680	0.04740
+10	5.4772	0.06000
+11	6.1600	0.07590
+12	6.8100	0.09480
+13	7.7368	0.11970
+14	8.7100	0.15070
+15	9.7400	0.18970
+16	10.9285	0.23880
+17	12.2620	0.30070
+18	13.7578	0.37850
+19	15.4369	0.47660
+20	17.3205	0.60000
+21	19.4340	0.75530
+22	21.8050	0.95090
+23	24.4660	1.19710
+24	27.4510	1.50710
+25	30.8010	1.89740
+26	34.5590	2.3886
+27	38.7760	3.0071
+28	43.5070	3.7857
+29	48.8160	4.7660
+30	54.7720	6.0000
+31	61.4550	7.5535
+32	68.9540	9.5093
+33	77.3680	11.9716
+34	86.8080	15.0713
+35	97.4000	18.9747
+36	109.2850	23.8865
+37	122.6200	30.0710
+38	137.5820	37.8570
+39	154.3690	47.6600
+40	173.2050	60.0000
+41	194.3400	75.5350
+42	218.0500	95.0930
+43	244.6600	119.7160
+44	274.5100	150.7130
+45	308.0100	189.7470
+46	345.5900	238.8650
+47	389.0700	300.7100
+48	435.6000	379.5000
+49	487.0100	474.3700
+50	547.7200	600.0000
+51	616.0300	759.0000
+52	688.7400	948.7500
+53	770.4000	1185.9400
+54	871.2000	1518.0000
+55	974.0300	1897.5000

Impedance		DB.
4000 ohms	Subtract	9
2000 ohms	Subtract	6
600 ohms	Subtract	1
500 ohms		0
250 ohms	Add	3
24 ohms	Add	13
15 ohms	Add	15
10 ohms	Add	17
8 ohms	Add	18
6 ohms	Add	19
5 ohms	Add	20
4 ohms	Add	21
2.5 ohms	Add	23
2 ohms	Add	24

$E = \sqrt{WZ}$
where:
E = ac volts across load
Z = loaded line impedance.
W = watts.
Cond. in Series with db. meter = .25 mfd.

Fig. 8-1. Conversion Chart for 500 ohm db. meter across impedances from 2-4000 ohms.

The ratio of two values of power, for example, P_1 and P_2 is represented as:

$$P_1/P_2 \ldots\ldots\ldots\ldots\ldots (1)$$

Or, the larger power is divided by the smaller. It is easily seen that the actual instantaeous magnitudes of P_1 and P_2 might extend over a wide range of values but would be of no concern to the quotient as long as they remained in the same proportion.

The number of decibels represented by such a ratio is obtained by multiplying the logarithm of the indicated quotient by 10:

$$no.\ db. = 10 \log_{10} (P_1/P_2) \ldots . (2)$$

Observe that the common logarithm of the quotient (ratio) is employed, i.e., the logarithm to the base 10. Hence the form, $\log_{10}$. From equation (2) the following rule may be stated:

Rule A: The number of db. is numerically equal to 10 times the common logarithm of a power ratio.

Voltage and current ratios may also be expressed in terms of decibels. If the two values of voltage E_1 and E_2 are measured across the same or identical impedances, or if the two values of current (I_1 and I_2) are taken through the same identical impedances:

$$no.\ db. = 20 \log_{10} (E_1/E_2) = 20 \log_{10} (I_1/I_2) \ldots\ldots\ldots (3)$$

Observe that in equation (3) the logarithm of the ratio is multiplied by 20 instead of 10. This is because power varies directly as the square of the current, and a logarithmic expression obtained in the manner of equation (2) needs to be multiplied again by 2, since doubling a logarithm is equivalent to squaring the number.

If, as is occasionally the case, the current or voltage values in the ratio are not associated with the same or identical impedances, our decibel computation must take into consideration the absolute magnitudes of the corresponding impedances and power factors of the impedances:

$$no.\ db. = 20 \log_{10} (E_1/E_2) + 10 \log_{10} (Z_2/Z_1) + 10 \log_{10} (f_1/f_2) \ldots\ldots (4)$$

and

$$no.\ db. = 20 \log_{10} (I_1/I_2) + 10 \log_{10} (Z_1/Z_2) + 10 \log_{10} (f_1/f_2) \ldots\ldots (5)$$

Z_1 and Z_2 are the impedances in which the voltages and currents operate, and f_1 and f_2 are the values of the corresponding power factors of the impedances.

From equations (3), (4), and (5) the following rules may be stated:

Rule B: When a voltage or current ratio shows values associated with the same or identical impedances, the number of db. is numerically equal to 20 times the common logarithm of the ratio.

Rule C: When a voltage ratio shows values associated with unequal impedances, the number of db. is numerically equal to a sum of three logarithmic expressions: 20 times the log of the voltage ratio plus 10 times the log of the impedance radio inverted plus 10 times the log of the power factor ratio.

Rule D: When a current ratio shows values associated with unequal impedances, the number of db. is numerically equal to the sum of three logarithmic expressions: 20 times the log of the current ratio plus 10 times the log of the impedance ratio plus 10 times the log of the power factor ratio.

Relationships

By definition, the common logarithm of a number is the exponent denoting the power to which 10 must be raised to equal the given number. Thus, 3 is the common log of 1000 since 10 must be raised to the third power to equal 1000, 5 is the common log of 100,000; 6 of 1,000,000.

Column 2 of Fig. 8-2 lists common logs corresponding to a few of the even-numbered ratios frequently encountered in radio work. The ratios are given in column 1. These logs are multiplied by 10 (in column 3) to give db. for power ratios, and by 20 (in column 4) to give decibels for current or voltage ratios.

It is readily seen from the chart that a power ratio of 100 to 1 corresponds to 20 db., while a current or voltage ratio of the same magnitude corresponds to 40 db. A ratio of 1,000,000 is equivalent to 60 db. for power, but 120 db. for current or voltage. It is also seen that a power, voltage, or current ratio must be squared in order to double

(1) RATIO	(2) LOG OF RATIO	(3) DB FOR POWER RATIO	(4) DB FOR CURRENT OR VOLTAGE RATIO
1	0	0	0
10	1	10	20
100	2	20	40
1000	3	30	60
10,000	4	40	80
100,000	5	50	100
1,000,000	6	60	120

Fig. 8-2. Common Log Table.

the number of decibels; and that increasing a power ratio to 10 times its original value is equivalent to adding 10 db., while the same increase in a current or voltage ratio is equivalent to adding 20 db.

It should be apparent to the reader that the same number of db. may be obtained from each of a number of ratios with widely divergent numerator and denominator values, as long as the same proportion exists between the two terms. A clear understanding of this condition not only explains why an extremely low-powered system can show the same number of db. gain as one of high power, but at the same time also places illustrative emphasis upon the relatively of the transmission unit.

Consider for example, three af amplifiers—one delivering 1 watt output with 0.1 milliwatt input; the second delivering 10 volts output for 100 millivolts input, both input and output circuits operating into 500 ohms impedance; and the third delivering 50 watts output for 5 milliwatts input. The gain in each case is 40 db.

Applications

1. *Amplifier Power Gain or Loss.* (a) Measure af or rf input watts, (b) measure af or rf output watts, (c) apply equation (2) and *Rule A.*

2. *Amplifier Voltage Gain or Loss.* Input and Output Impedances Equal. (a) Measure af or rf input voltage, (b) measure af or rf output voltage, (c) apply voltage equation (3) and *Rule B.*

3. *Amplifier Current Gain or Loss.* Input and Output Impedances Equal. (a) Measure af or rf input current, (b) measure af or rf output current, (c) apply current equation (3) and *Rule B.*

4. *Amplifier Current or Voltage Gain or Loss.* Unequal Input and Output Impedances. (a) Measure af or rf input voltage or current, (b) measure af or rf output voltage or current, (c) determine absolute values of input and output impedances, (d) determine absolute values of power factor for the two impedances, (e) apply voltage equation (4) and *Rule C* or current equation (5) and *Rule D.*

Note:—Any of the foregoing amplifier characteristics may be taken for the entire amplifier (over-all) a single stage (per stage) or any cascaded group of stages. A *plus db.* rating indicates gain; *minus db.*, loss.

5. *Amplifier Output Level, or AF Line Level.* This is stated by engineers and manufacturers as so many db., the number of decibels above or below 6 milliwatts (zero db.) being assumed. Apply the equation:

$$P \text{ in watts} = .006 \times \text{antilog } (\text{db.}/10) \quad \ldots\ldots\ldots\ldots (6)$$

The term db. is the figure stated for amplifier or line. An *antilog* is the figure or number which corresponds to a certain log. (Looking up an antilog in the log tables is the reverse of the process of looking up a log.)

6. *Microphone, Hum, Input Signal or Noise Level.* This is generally stated as so many negative db., or "db. down," and like Example 5 refers to zero db. as 6 milliwatts. Since we are dealing with ratios only, we can work out the problem assuming a positive db. level to get the power ratio, then divide the reference level, 6 milliwatts, by this ratio to get the actual level. For example, a level of — 19 db. will be assumed for the purposes of calculation. Taking the antilog of (19/10) or 1.9 gives 79.4. The actual power level represented by — 19 db. would then be .006 divided by 79.4 or .000076 watts, or .076 milliwatts. This method simplifies calculation somewhat as it avoids the necessity of dealing with negative logarithms.

Use of the Slide Rule

Problems involving decibels are easily solved on the slide rule, making use of the *L* logarithm scale. Converting a power ratio to decibels is accomplished by setting the indicator to the power ratio on the *D* scale and reading the

number of db. on the *L* scale. Example: the power ratio corresponding to 5 is 6.99 db. When the power ratio is higher than 10, divide by 10, 100, etc., until the quotient is less than 10. Find the corresponding db. and add 10 decibels for each place the decimal point had to be moved in order to bring the ratio within the range 1-10. Example: What is the db. gain corresponding to a power gain of 5530? Moving the decimal point three places to the left, we obtain 5.53. Set the indicator to 5.53 on the *D* scale and read 7.42 on *L*. Add 30 db. to the result, which gives 37.42 db.

If the power ratio is less than 1, the *CI* and *L* scale should be employed. Finding the db. gain corresponding to voltage ratios—if the impedances and power factors are the same in each case—proceed as described in the foregoing but multiply the result by 2.

The "log-log" slide rule offers an alternative method of finding decibels. Set the index on the slide to 10 on *LL3*. Opposite the power ratio on *LL2* and *LL3* find the gain in db. on *C*. If the power ratio was greater than 10, all values found on *C* are between 10 and 100. If it was less than 10, the *C* scale may be read directly.

Finding decibels from the voltage ratio is accomplished by setting 2 on the *C* scale and 10 on *LL3*. Opposite the voltage ratio on *LL2* or *LL3* the db. may be read on *C*. If the voltage or current ratio is between 1 and *pi*, the db. gain is between 1 and 10. If the ratio exceeded 3.14, multiply the *C* indication by 10.

When converting power ratios less than 1 to decibels, set 1 (middle of *B* scale) to 0.10 on the *LLO* scale. The loss is then found on *B* opposite the power ratio on *LLO*. For current or voltage ratios, set 2 on *B* scale to 0.10 on the *LLO* scale and proceed as before.

To find the gain in db. directly from two values of current, voltage, or power, set the larger of the two on *C* to the smaller on *D*. Opposite the index of *C*, find db. on *L*.

Ready-Reference Charts

For the reader's convenience, two charts have been made up from calculations involving equations (2), (3), and (6).[1]

By referring to Fig. 8-3, the number of decibels corresponding to any power level between 6 micromicrowatts and 6 kilowatts may be found quickly, the necessity for performing equation (6) computations being eliminated in most practical instances. From Fig. 8-4, the number of decibels corresponding to any current, voltage or power ratio may be quickly located.

Particular notice should be taken of the subdivisions in the power column of Fig. 8-3. These graduations are uniformly spaced (as regards numerical value) except that the lowermost subdivision in each power group has not the same value as each of the upper five in the group. For this reason, we have numbered the lowermost subdivision in each group. Thus, the number line, 10 micromicrowatts is only 4 micromicrowatts removed from the 6 micromicrowatts major division, while each other subdivision up to 60 micromicrowatts is exactly 10 micromicrowatts higher than the previous one. Thus, we read, 10, 20, 30, 40, and 50 micromicrowatts between 6 and 60 micromicrowatts. Similarly, we read, 100, 200, 300, 400 and 500 micromicrowatts in the next highest power group, between 60 and 600 micromicrowatts.

To illustrate the use of Fig. 8-3, locate the db. output rating of a 6L6 amplifier, the audio output of which is 60 watts. Opposite the 60 watt line in the power column will be found the 40 line in the decibel column. On the basis of 6 milliwatts as zero db., a power level of 60 watts is 40 db.

The power output of a high quality microphone rated at minus 45 db. may be found in the same manner. Read 0.2 microwatt directly opposite the "minus 45 db." in Fig. 8-3.

A current, voltage, or power ratio is

[1]The Aerovox Research Worker, Vol. 12, No. 7, July, 1941.

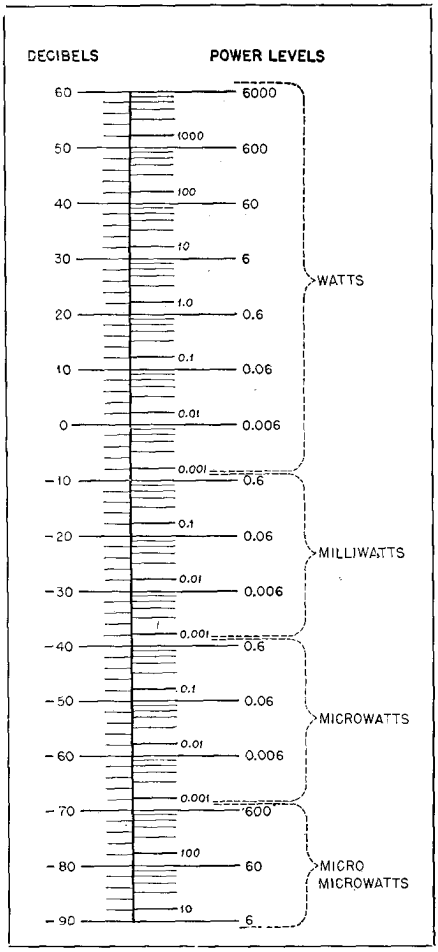

Fig. 8-3.

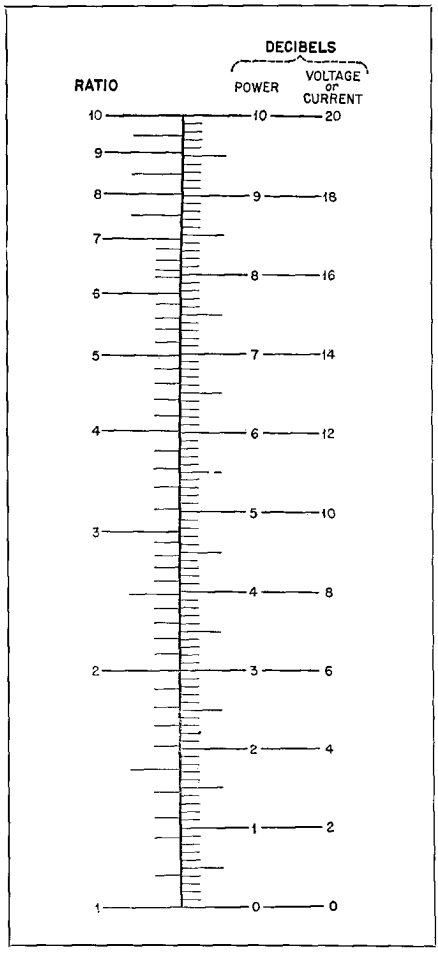

Fig. 8-4.

located in the ratio column of Fig. 8-4 and the number of decibels read directly opposite in the power column or current-voltage column, depending upon the nature of the ratio. For example: a power ratio of 4 is seen to correspond to 6 db. while a current or voltage ratio of the same value equals 12 db.

The use of Fig. 8-4 can be extended beyond the current or voltage ratio of 10 by adding 20 db. for each place the decimal point has been moved to the right to make the figures in the ratio column correspond to those in the ratio desired. For example: to find the db. equivalent to a current or voltage ratio of 44, locate 4.4 in the ratio column of Fig. 8-2. Read the equivalent 12.8 db. in the current-voltage db. column. The decimal point was moved one place in 4.4 to convert it into the ratio, 44. Therefore, add 20 db. to the result. 12.8 plus 20 equal 32.8 db.

The use of Fig. 8-4 may similarly be extended beyond the power ratio of 10 by adding 10 db. for each place the decimal point is moved to the right. For example: look up the power ratio 160 as 1.6 in the ratio column. This would correspond to 2 db. But the decimal point was shifted two places to change 1.6 to 160 and 10 db. must be added for each place. The result, therefore is 2 plus 20, or 22 db.

Power Level and Volume Indicator Meters

The measurement of power or program levels in sound circuits is of primary importance to the audio engineer. Meters designed for this purpose are known as "volume indicator (vi)" meters and have been in use by the telephone company, radio broadcasting stations, recording companies, and the motion picture industry for many years.[2]

The purpose of these meters, or volume indicators, is to indicate the variation in electrical sound levels. This does not mean that the meter measures the actual volume of sound, but rather the level of voltages generated by the reproducing equipment. Measurement by electrical means is made possible by the fact that the sound intensity is directly proportional to the voltage amplitude in an electrical circuit.

As the voltages generated are of an alternating nature, an ac type meter will be required for their measurement. The conventional type ac meter used for power measurement is not suitable for this purpose because of its characteristic low impedance and limited response to frequency.

Volume indicator meters are, in reality, sensitive high impedance ac voltmeters of wide frequency range, calibrated either in decibels or volume units relative to one of the two existing reference levels in use by the electronic industry. The device may be either electronic or of the copper-oxide rectifier type.

From a study of the waveforms involved in the transmission of speech and music, at first thought it appears that the measuring instrument should respond to the peak or crest of the wave, rather than the rms value. Further study, however, indicates that either type meter will be satisfactory. Also, it has been found that phase distortion affects the readings of peak indicating meters, although it may not be apparent to the ear, thus possibly causing overloading of the system because of incorrect readings.

Two terms are in general usage in regard to meters used for audio frequency measurements. They are the volume level indicator and the power level indicator. The first term applies only to meters used for monitoring program material of complex waveforms which is varying in both amplitude and frequency. The second term is applied to meters used for the measurement of sound circuits where steady-state conditions are maintained by using sine wave power.

Power Level Indicator

The principal difference between the volume level indicator and the power level meter is in damping. In the volume level indicator definite characteristics have been standardized by the industry and are built into the meter movement to control its sensitivity, damping, frequency range, and input impedance. In the power level meter, only the frequency range and sensitivity are of importance. Volume level meters may be used to measure both steady-state conditions and complex waveforms; however, this does not apply to power level meters.

In the early days of broadcasting and recording, the volume level indicator was of the electronic type, having characteristics which were considered by its designers to be the most suitable. This situation led to considerable confusion throughout the industry as measurements made in one connection could not be correlated with other measurements. In addition, the meter employed one or more vacuum tubes and required both a high and low voltage source for its operation. This feature restricted the use of these meters to the laboratory or studio control room.

Around 1929 the copper-oxide rectifier volume level indicator made its appearance. This meter employed a 1 ma. dc D'Arsonval type movement which utilized a half-wave copper-oxide recti-

[2]H. M. Tremaine, "Power Level and Volume Indicator Meters," Radio & Television News, Nov. 1950, pp. 84-96.

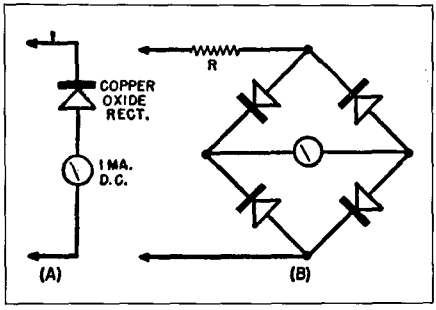

Fig. 8-5. (A) Half-wave rectifier and (B) a full-wave bridge rectifier.

fier connected in series with one side of the meter. See Fig. 8-5A. This resulted in a fairly sensitive meter which was handicapped, however, by a limited frequency response and poor damping. The use of the half-wave rectifier resulted in a non-symmetrical response to complex waveforms. Later the rectifier was changed to a full-wave bridge type, Fig. 8-5B, which eliminated the distortion introduced by the half-wave rectifier.

Full-wave rectification is essential in meters used for audio frequency measurements since the human voice consistently generates peaks of greater amplitude for one polarity than the other. Under these conditions it would be impracticable to use half-wave rectification unless the circuits were poled and the meter polarity was fixed. Furthermore, if a bi-directional microphone was in use and it was reversed 180 degrees, the peaks, as indicated by the meter, would also be reversed, and depending on the original polarity, might cause overloading of the electrical circuits due to the incorrect meter readings.

With the adoption of the full-wave rectifier, the meter sensitivity was increased by replacing the 1 ma. movement with one of 500 microampere sensitivity. A resistance was placed in series with the movement to increase the meter impedance to 5000 ohms and at the same time adjust its sensitivity to some definite reference level. When this meter was introduced, the reference level for audio frequency measurements was 6 milliwatts of power in a 500 ohm circuit. For this amount of power, 1.73 volts is developed across the circuit. The meter movement indicated this 1.73 volt reference point on the scale slightly to the left of its center position.

Power level meters are used for setting the levels of recording or reproducing systems and are generally connected in the circuit at a point where the signal is distributed to other portions of the system. This point is, as a rule, the bridging bus.

The power level indicator meter is used strictly for steady-state sine wave measurements and is not suitable for monitoring program material as its damping is such that the meter tends to overshoot its mark, thus giving rise to false indications with changing levels.

Three types of meter movements are available for power level indicators: 1. the "high speed" or HS movement used for high speed measurements; 2. the "general purpose" or GP movement work; and 3. the "low speed" or SS movement which is generally employed in making acoustic measurements. The different types of movements may be identified by the symbols "GP," "SS," or "HS" which appear on the meter face.

To increase the operating range of the meter movement above the reference level, a 5000 ohm "L" type attenuator is placed ahead of the meter. See Fig. 8-6. The attenuator performs two functions, i.e., it extends the range above the reference level, and permits this extension without affecting the

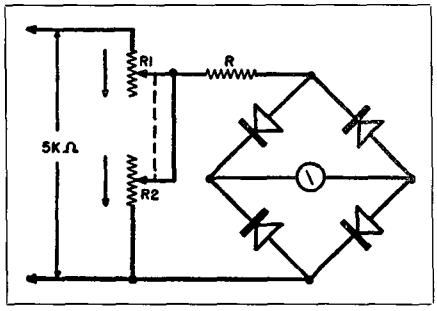

Fig. 8-6. Circuit diagram of a rectifier-type meter with an "L" type variable attenuator.

5000 ohm input impedance. A constant input impedance is essential as it allows the input attenuator setting to be changed during operation without upsetting the impedance of the circuit bridged by the meter.

The "L" type attenuator does not present a constant impedance looking in both directions, but only to the source bridged. The arms R_1 and R_2 are connected mechanically by the common shaft and are varied inversely. Therefore, R_2 may drop to only a few ohms when the attenuator is set to the higher ranges. The loss potentiometer should be thought of as a meter multiplier. For the power level meter, the settings of the attenuator usually start at zero and continue in steps of 1 or 2 db. to at least +30 db. above the reference level. The meter face is calibrated from —10 db. to +6 db. Adding the meter dial readings and the attenuator settings algebraically results in a range of from —10 db. to + 36 db., or a total spread of 46 db.

Copper-oxide instrument rectifiers are approximately 70% efficient and are excellent for rectification at audio frequencies, providing the voltage across any one element in the bridge does not exceed 11 volts and that the temperature does not rise above 160 degrees F. With the attenuator placed ahead of the meter, the voltage across the rectifier elements, under normal operating conditions, does not exceed 4 volts.

The frequency response of the early instrument rectifiers was deficient at frequencies above 6000 cycles, dropping off as much as 4 db. at 10,000 cycles. At first this was attributed to the capacity between the plates of the rectifying elements, but subsequent investigation proved that this was not entirely the case. While it is true that some effect was contributed by the capacity, the major factor was the rectifying qualities of the elements at the higher frequencies.

Present day instrument rectifiers are highly developed and will respond to several hundred thousand cycles-per-second. The frequency response of a typical copper-oxide rectifier is shown in Fig. 8-7.

The VU Meter

Because of the inaccuracies inherent in the copper-oxide rectifier power level meter and because of the fact that it was not satisfactory for program monitoring, the development of an entirely new meter was jointly undertaken by the *Bell Telephone Laboratories, Columbia Broadcasting System,* and the *National Broadcasting Company.* The result of this research was the development not only of a new type volume indicator meter but also a new reference level of 1 milliwatt, a unit which was adopted by the electronic industry in May 1939.

This new meter, shown in Fig. 8-8, was termed a "volume unit (vu)" meter. This instrument is calibrated in volume units numerically equal to the number of decibels above the reference level of 1 milliwatt of power in a 600 ohm circuit. With this new meter came a new term, "zero dbm.," meaning that the level under discussion is in relation to 1 milliwatt of power in a 600 ohm cir-

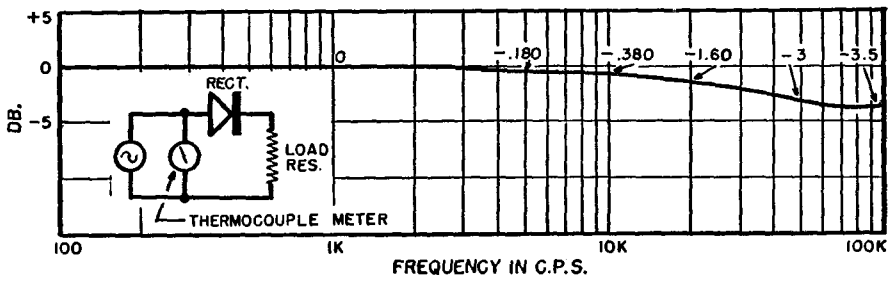

Fig. 8-7. Frequency response of a conventional copper-oxide instrument rectifier.

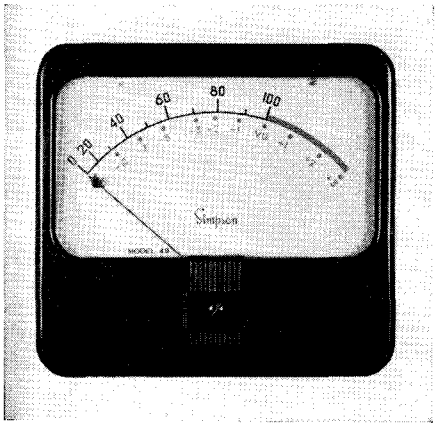

Fig. 8-8. Standard VU meter, Simpson 49, with B scale. (Courtesy, Simpson Elect.)

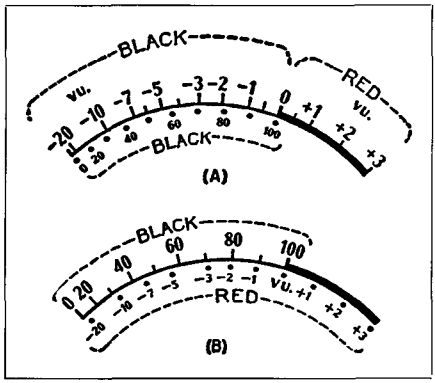

Fig. 8-9. (A) Standard VU type A scale stressing VU and (B) Standard VU scale type B stressing modulation.

cuit. In discussing reference levels, the term "dbm." applies only to the 1 milliwatt reference level, while "db." is used to express levels referring to the 6 milliwatt reference level.

The 1 milliwatt reference level has three distinct advantages. It is a unit quantity, hence it is readily applicable to the decimal system, being related to the watt by the factor 10^{-3} which results in positive values for the majority of measurements. A further advantage of the vu meter is that all meters of this type are exactly alike in construction and characteristics and, when several are connected across the same circuit, may be tested by the application of a 1000 cycle signal for checking their operation.

VU Meter Characteristics

The characteristics for the vu meter were adopted after careful consideration as being most suitable for all applications.

1. General. The volume indicator employs a dc meter movement with a non-corrosive, full-wave, copper-oxide rectifier unit, and responds approximately to the rms value of the impressed voltage. This will vary somewhat depending on the waveforms and the per-cent harmonics present in the signal.

2. Scale of instrument. The face of the instrument may have either of the two scale cards shown in Fig. 8-9. Each card has two scales, one a vu scale ranging from —20 to +3 vu, and the other a per-cent voltage scale ranging from 0 to 100 with the 100 point coinciding with the 0 point on the vu scale. The normal point for reading volume levels is at the 0 vu or 100 scale point which is located to the right of the center at about 71% of the full-scale arc.

3. Dynamic characteristics. With the instrument connected across a 600 ohm external resistance, the sudden application of a sine wave voltage sufficient to give a steady-state deflection at the 0 vu or 100 scale point, should cause the pointer to overshoot not less than 1% nor more than 1.5% (.15 db.). It should be capable of reaching 99 on the per-cent voltage scale in .3 second.

4. Response vs. frequency. The instrument sensitivity should not depart from that at 1000 cps by more than .2 db. between 35 and 10,000 cps nor more than .5 db. between 25 and 16,000 cps.

5. Sensitivity. The application of a sinusoidal potential of 1.228 volts (4 db. above 1 milliwatt in 600 ohms) to the instrument, in series with the proper external resistance (3600 ohms),

will cause a deflection to the 0 vu or 100% point.

6. Impedance. For bridging across a line the volume indicator, including the instrument and proper series resistance (3600 ohms), should have an impedance of 7500 ohms when measured with a sinusoidal voltage sufficient to deflect the meter to the 0 vu or 100% scale point.

7. Harmonic distortion. The harmonic distortion introduced in a 600 ohm circuit when a volume indicator is bridged across it is less than .3% under the worst possible condition (when there is no loss in the variable attenuator).

8. Overload. The instrument must be capable of withstanding, without injury or effect on the calibration, peaks of ten times the voltage equivalent to a reading of 0 vu or 100% for .5 second, and a continuous overload of five times that giving a reading of 0 vu.

The selection of the scale for the meter face will depend on its application. For broadcasting and recording purposes where it is desirable to know the percentages of modulation the scale of Fig. 8-8 is used. For laboratory and general test work the scale of Fig. 8-9A is employed because most of the readings will be in vu.

The circuit diagram of the complete vu meter is shown in Fig. 8-10. The meter movement consists of a 50 microampere dc D'Arsonval movement and a full-wave bridge rectifier. The meter impedance, including the rectifier, is 3900 ohms.

A 3900 ohm variable attenuator and a 3600 ohm series resistor are connected ahead of the meter. As a rule, devices which are to be bridged across circuits of 600 ohms should have at least ten times the impedance of the circuit being bridged. Connecting the 3600 ohm resistor ahead of the attenuator provides a bridging impedance of 7500 ohms. See Fig. 8-10.

Attenuators designed for use with vu meters are constructed with the attenuator dial calibrations starting at +4 dbm. and continuing in steps of 2 db. up to +44 dbm. No 0 dbm. position is provided. The reason for this is that by placing a 3600 ohm resistor ahead of the attenuator to raise the input impedance, a loss of 4 db. is incurred.

If the 3900 ohm meter movement and the attenuator (the attenuator in its +4 dbm. position has zero loss) is placed across a 600 ohm circuit in which 1 milliwatt of power is flowing, the pointer will be deflected to the 100% or 0 dbm. mark. When the 3600 ohm series resistor is inserted in the circuit the sensitivity of the meter is lowered by 4 db. To bring the deflection back to the 100% mark will now require +4 dbm. at the input.

It is the practice of the telephone company to allow signal levels from +4 dbm. to +8 dbm. to be transmitted over the average cable pair. Thus, with the meter connected as shown in Fig. 8-10 the 100% mark will indicate a +4 dbm. signal level.

The advantage to be obtained by the use of the vu meter over the power level and older type v.i. meters are: a 7500 ohm bridging impedance; the 100% or 0 dbm. mark may be set to represent a maximum signal level permitted by the telephone company and if associated with a line feeding a radio transmitter or recording system, it will indicate the percentage of modulation; uniform damping; and frequency response which allows the correlation of measurements with other activities.

An important point to remember in using the attenuator is that the zero calibration point on the meter always

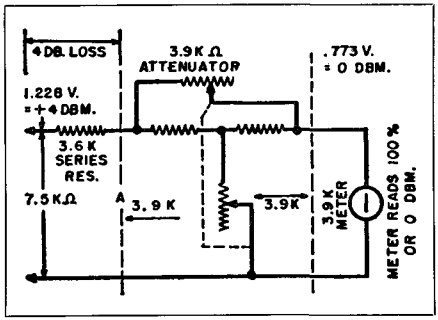

Fig. 8-10. Standard attenuating network for use with NARTB meter.

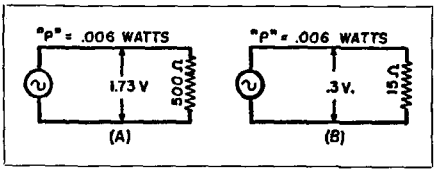

Fig. 8-11. Comparison of voltages in a 500 ohm and 15 ohm circuit for the same power.

becomes that of the attenuator setting and the meter indications are in reference to that setting. The greatest accuracy for either the power level or volume indicator meter lies between the —1 db. and the +1 db. calibration points on the meter scale. Thus, all readings should be made between these points, if possible, by adjusting the input attenuator and then adding the readings algebraically.

Power Level Meters

Power level meters are generally calibrated in reference to 6 milliwatts of power in a 500 ohm circuit and if placed across an impedance other than 500 ohms will not read correctly. To obtain the correct reading a "correction factor" is applied to the indicated reading to obtain the true power in the circuit. Fig. 8-11 demonstrates why the meter does not read correctly.

In the diagram a 500 ohm and a 15 ohm circuit are shown. It will be noted that the same amount of power is being dissipated in both circuits; however, the voltage across the circuits is not the same. If a power level meter, calibrated for 500 ohms, is placed across the 500 ohm circuit, it will be deflected to its zero reference mark. Connecting the same meter across the 15 ohm circuit will cause it to read low by 15.22 db. This is true because for the same amount of power the voltage across the 15 ohm circuit is only .3 volt. Thus the meter will not be deflected the same amount as for the 500 ohm circuit where 1.73 volts may be obtained.

CORRECTION FACTORS		
LINE Z (in ohms)	METER CAL. (500 ohms) (in db.)	METER CAL. (600 ohms) (in db.)
600	—0.791	0.000
500	0.000	+0.791
250	+3.01	+3.80
200	+3.97	+4.77
125	+6.02	+6.81
100	+6.99	+7.78
50	+10.00	+10.79
30	+12.22	+13.01
15	+15.22	+16.02
8	+17.96	+18.75
4	+20.97	+21.76

Fig. 8-12. Some commonly used correction factors for power level meters.

The correction factor for any impedance may be obtained with the aid of the following equation: db. correction $= 10 \log_{10} (Z_1/Z_2)$ or $(10 \log_{10} (Z_2/Z_1)$ if the impedance of the circuit is higher than that for which the meter was calibrated) where Z_1 is the impedance for which the meter is calibrated and Z_2 the impedance to be bridged.

As an example, assume that a db. meter calibrated for 500 ohms is connected across a line impedance of 8 ohms with its attenuator set to zero. The signal deflects the pointer to the zero mark. What is the true power level of the circuit? It is db. $= 10 \log_{10} (Z_1/Z_2) = 10 \log_{10} (500/8) = 10 \log_{10} 62.5 = 10 \times 1.796 = 17.96$ db.

The correction factor 17.96 db. is added to the meter reading, thus when the meter indicates zero the true level is +17.96 db. If the meter is placed across an impedance higher than that for which it was originally calibrated, the second equation is used and the correction factor is subtracted from the meter reading. The most commonly used correction factors are given in Figs. 8-1 and 8-12.

When a meter is bridged across a circuit a slight power loss takes place. This is called "bridging loss." To determine how much the circuit level will be affected when the meter is bridged across it, the following equation may be used: db. $= 20 \log_{10} [(2BR + R)/2BR]$ where BR is the meter impedance and R is the impedance of the circuit bridged.

For example, assume a v.i. meter of 5000 ohms is bridged across a circuit of 500 ohms. What is the bridging loss in decibels? It is db. $= 20 \log_{10} [(2BR + R)/2BR] = 20 \log_{10} [(10{,}000 + 500)/10{,}000] = 20 \log_{10} 1.05 = 20 \times .0212$

= .424 db. Thus, when the meter is bridged across the circuit the original level will be lowered by .424 db. Generally speaking, unless very precise measurements are to be made, this small loss in level may be ignored. Bridging losses for lines of different impedances and v.i. meters of various bridging impedances are shown in Fig. 8-14.

The difference in decibels between any two reference levels may be determined by the equation db. = 10 $\log_{10} P_1/P_2$. For example, the difference between a reference level of 1 milliwatt and one of 6 milliwatts would be: db. = 10 $\log_{10} P_1/P_2$ = 10 $\log_{10}$ 6/1 = 10 $\log_{10}$ 6 = 10 × .778 = 7.78 db.

Conclusion

In closing it might be well to mention that copper-oxide rectifier meters, irrespective of type, will at times introduce distortion into the circuit being bridged, if used in conjunction with distortion measuring equipment. The vu attenuator should be set to its maximum position after the proper level has been obtained and then the distortion reading should be taken. Specifications for an attenuation network for the

ATTENUATION NETWORK FOR VOLUME LEVEL INDICATOR

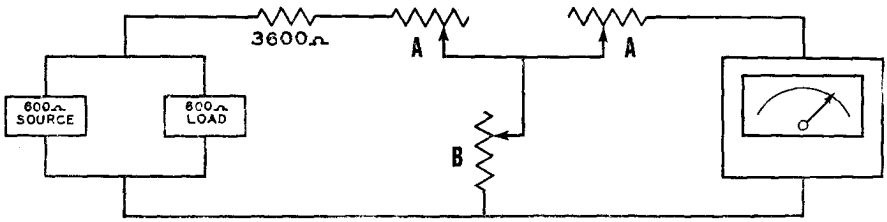

Attenuator Loss — db.	Level vu*	Arm A Ohms	Arm B Ohms	Attenuator Loss — db.	Level vu*	Arm A Ohms	Arm B Ohms
0	+ 4	0	Open	24	+28	3487	494.1
1	+ 5	224.3	33801	25	+29	3485	440.0
2	+ 6	447.1	16788	26	+30	3528	391.9
3	+ 7	666.9	11070	27	+31	3566	349.1
4	+ 8	882.5	8177	28	+32	3601	311.0
5	+ 9	1093	6415	29	+33	3633	277.1
6	+10	1296	5221	30	+34	3661	246.9
7	+11	1492	4352	31	+35	3686	220.0
8	+12	1679	3690	32	+36	3708	196.1
9	+13	1857	3166	33	+37	3729	174.7
10	+14	2026	2741	34	+38	3747	155.7
11	+15	2185	2388	35	+39	3764	138.7
12	+16	2334	2091	36	+40	3778	123.7
13	+17	2473	1838	37	+41	3791	110.2
14	+18	2603	1621	38	+42	3803	98.21
15	+19	2722	1432	39	+43	3813	87.53
16	+20	2833	1268	40	+44	3823	78.01
17	+21	2935	1124	41	+45	3831	69.52
18	+22	3028	997.8	42	+46	3839	61.96
19	+23	3113	886.3	43	+47	3845	55.22
20	+24	3191	787.8	44	+48	3851	49.21
21	+25	3262	700.8	45	+49	3857	43.86
22	+26	3326	623.5	46	+50	3861	39.09
23	+27	3384	555.0				

*vu—Numerically equal to number of db. above 1 mw reference level.

Fig. 8-13. Circuitry and specifications for varible attenuotors used with standard volume level indicators.

meter of Fig. 8-8 is shown on the chart Fig. 8-13.

The distortion introduced by the vu meter is caused by the rectifier clipping the peaks of the impressed waveforms. The amount of distortion introduced will depend on how much isolation is provided by the attenuator network resistance.

BRIDGING LOSSES		
METER Z (in ohms)	LINE Z (in ohms)	BRIDGING LOSS (in db.)
5000	500	0.42
5000	600	0.51
7500	500	0.28
7500	600	0.34
10,000	500	0.21
10,000	600	0.26

Fig. 8-14. Bridging losses for lines of different impedances and vi meters of various bridging impedances.

Another precaution which should be taken is that since the vu meter is designed to be mounted on dural or aluminum panels, because of the high coercive force magnet used in the movement, the shunting effect of the steel on the magnetic circuit reduces the flux and affects the meter characteristics if the meters are mounted on steel panels.

CHAPTER 9

Phono Reproducers (Pickups)

A discussion of representative cartridges, their construction and the various methods of coupling which may be used to give best reproduction.

● One of the greatest contributing factors to the successful reproduction of voice and music through electronic systems is the development of the modern pickup. These units are found in a variety of shapes and sizes and are usually divided into the following classification; 1. crystal, 2. magnetic, and 3. moving coil. There are many varieties and versions of each. From the most inexpensive type commonly employed in the average home phonograph, to the elaborate precision made instruments designed specifically for broadcast and high fidelity reproduction, we find various shapes, sizes, etc., in use.

Since around 1930, the electric phonograph and radio-phonograph combinations for homes have appeared on the market in ever increasing numbers. Performance has steadily improved through the years to such a degree that reproduction of recorded sound today leaves little to be desired.

The success of these devices, as far as home recording is concerned, is due largely to the development and improvement of pickup cartridges using crystal elements of Rochelle salts (sodium potassium tartrate). The use of this substance has resulted in improvements such as decreased needle pressure, higher output voltage, and wider frequency response.

The home recorder may employ an inexpensive preamplifier and omit complicated equalizers in conjunction with the modern crystal phono pickup and still obtain satisfactory reproduction of commercial records. The voltage developed by crystal cartridges of this type is sufficient to enable them to perform satisfactorily with ordinary low gain type amplifiers. The comparatively low cost of crystal phono cartridges, together with their other advantages, has permitted radio and phonograph manufacturers to produce equipment for home use priced within the means of almost everyone.

The Crystal Pickup

Back in 1880, Madame Curie, working with her husband, discovered that certain crystals would develop electrical charges on their surfaces when subjected to mechanical stresses. This phenomenon became known as the piezoelectric effect (electricity developed due to pressure or torsion). This is the principle upon which a crystal pickup cartridge functions.

The needle, following the groove of a record upon which sound has been recorded, is vibrated in proportion to the amplitude of the recorded sound. See Fig. 9-1. This vibration is imparted to

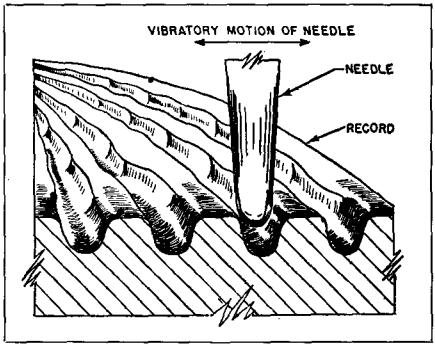

Fig. 9-1. Greatly enlarged cross-sectional view shows needle following record grooves.

the crystal element through a needle chuck or torque wire assembly or variations thereof. The illustration, Fig. 9-2, shows the construction of a low needle pressure type cartridge and a conventional removable needle type cartridge made by *Shure Bros.*

In both of these types a torsional crystal element (twister) is used and is so mounted that the needle vibration imparts torsional forces to the crystal element. The motion of the vibrating system is almost entirely absorbed by the twisting of the torque wire in the low pressure cartridges and the flexing of the coupling rubber in the conventional type so that the crystal, practically speaking, does not vibrate. However, the flexing of the torque wire or coupling rubber applies forces to the crystal directly proportional to the needle motion. The crystal generates voltages corresponding to these forces. Various types of rubber and other damping materials, such as Viscoloy, etc., are used for controlling output voltage, frequency response and other characteristics.

Crystal cartridges are made in a great number of styles with a wide variety of electrical characteristics in order to accommodate a multitude of various applications. The size, shape, and required needle pressure of a cartridge have a great deal to do with the styling of the pickup arm. The output voltage and frequency range of the cartridge are factors taken into consideration by equipment manufacturers when they are designing the amplifier and speaker combination with which the cartridge is

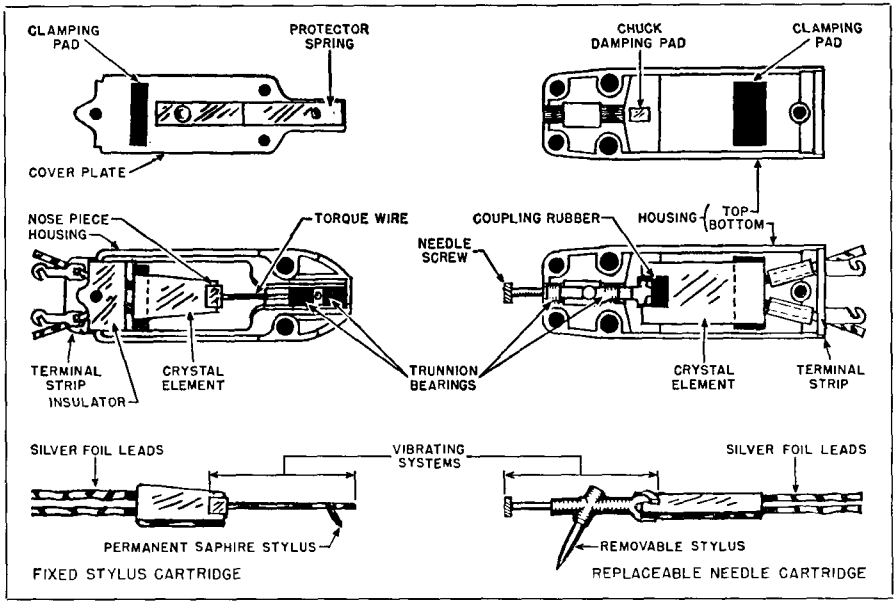

Fig. 9-2. Note the differences in construction between the fixed needle (left) and the replaceable needle (right) cartridge.

to be used. Much time is spent on the circuit design of an amplifier, and a crystal cartridge used for reproduction of records becomes one of the basic components of the amplifier input circuit.

It is well-known that the various components of any circuit cannot be replaced with any but those of like characteristics without disturbing the circuit balance or changing the performance of the equipment. When it becomes necessary to replace a crystal phonograph cartridge, this should be done with an exact duplicate or substitute of the original in order to obtain optimum results.

Requirements

The technical specifications for crystal pickups and cartridges should be consulted prior to making selections or recommendations. Information concerning output voltage, needle pressure, and frequency range is of particular interest and value. Selection of the proper pickup and accurate installation will determine to a great extent the type of reproduction which may be obtained.

Great care should be exercised when installing a pickup arm to make sure that the motor board is perfectly level and that the pickup is mounted squarely, that is, on a direct plane with the surface of the record. Otherwise the needle will not properly track the record grooves. This would cause excessive needle and record wear. If the amplifier with which the pickup is to be used is of the high-gain, high output type and it is necessary that the volume be kept at high level, it may be advisable to install a pickup and turntable mechanism in a compartment or cabinet separate from the speaker, in order to prevent feedback.

Certain types of turntable motors may cause a considerable amount of turntable vibration which may produce a disagreeable rumbling noise. Before installing a pickup on the motor board of a turntable using such a motor, the direction of maximum vibration should be determined. Following this, the pickup arm should then be installed so that it is parallel with the vibrating motion. Observance of this precaution will do much toward preventing this rumbling.

Equalizers for Crystal Phonograph Pickups

It is sometimes advisable and often necessary, due to the many individual tastes involved, that an equalizer be employed in the input circuit of an amplifier in series with the phonograph pickup in order that the response of the pickup be entirely satisfactory to the listener. This is especially true of radio receivers or amplifiers which were not originally designed for phonograph operation. An understanding of the proper application of equalizers, to be covered later, is of great help to the serviceman called in for consultation and advice by the listeners whose equipment does

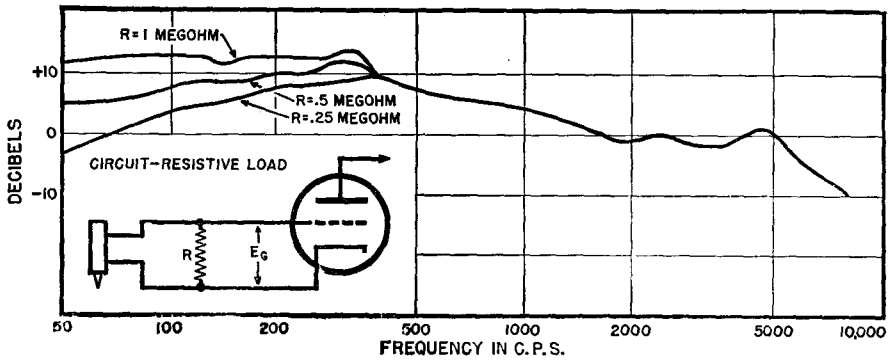

Fig. 9-3. Decreasing the value of R decreases bass response. A .5 megohm load is normal.

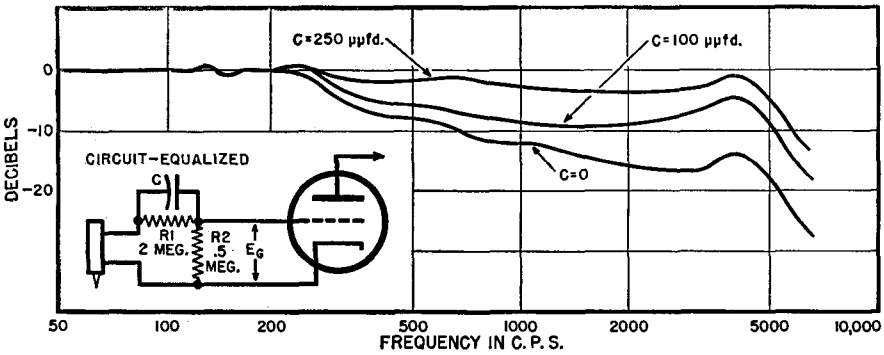

Fig. 9-4. Improved equalization is afforded by adding the RC circuit shown in the inset.

not have enough low frequency or sufficient high frequency response to suit them.

Crystal pickup cartridges are high impedance devices and should, therefore, be connected across a high resistance load. The usual value employed is .5 megohm. By decreasing this value the low frequency response of the pickup cartridge may be decreased, while increasing the value will increase the low frequency response of the cartridge. See Fig. 9-3. However, if this value is made either too high or too low, the bass and treble balance of the cartridge may be upset. In addition, the over-all performance would be quite unsatisfactory. For best results with average crystal cartridges this value must be kept between .25 megohm and 1 megohm.

With the value of low resistance being adjusted for optimum low frequency response (optimum in this case being that which is most satisfying to the individual listener), the pickup may be further compensated by using the equalizer circuit shown in Fig. 9-4. The value of capacitance to be used is usually between 50 mmfd. and 500 mmfd., depending on the amount of high frequency response desired. R_1 may be between 1 megohm and 5 megohms.

When the total value of R_1 and R_2 is 2 megohms, maximum bass response is obtained. Any further increase in the value of R_1 has no further effect on the low frequency response of most cartridges. Further increase in the value of R_1 does, however, minimize the effects of increased temperatures on the low frequency response. As the temperature increases, the low frequency response of the cartridge has a tendency to decrease slightly and if a condition exists where the operating temperature

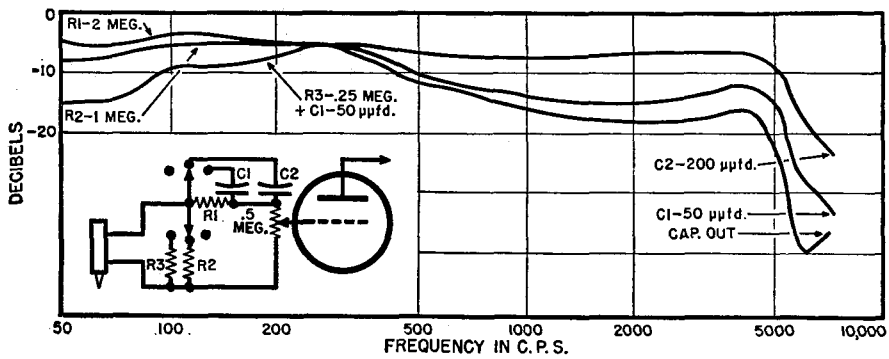

Fig. 9-5. High and low frequency response may be set independently with this equalizer.

varies between normal room temperature (approximately 70° F.) and 100° to 110° F., it may be advisable to employ a higher value of resistance for R_1.

It should be noted that as the value of R_1 is increased, the value of capacitance should be decreased proportionately. Another important factor to remember is that when a circuit is equalized there is necessarily a reduction in output of the cartridge and, therefore, it may be that increasing the value of R_1 will not allow sufficient excitation voltage to reach the input tube grid to enable the amplifier to deliver its full rated power output. If this is the case, it is best that the total values of R_1 and R_2 be held to 2 megohms or less. By using a slightly more elaborate circuit, such as is shown in Fig. 9-5, both high and low frequency response may be varied independently. One switch is used to control the low frequency response while the other switch is used to control the high frequency response.

Temperature and Humidity Effects

Crystal devices employing Rochelle salt crystal elements function best at temperatures between 70° and 80° F. when the relative humidity is approximately 50%. They are very much like human beings in that wherever human beings can live comfortably, the crystal element will function normally and have a very long life span. The piezoelectric limitations of Rochelle salt crystal pickup cartridges are between —40° F. and 120° F. If exposed to temperatures above 120° F., the crystal will lose its piezoelectric activity permanently. Adequate ventilation should be provided around the phonograph or radio cabinet in order that the temperature around the pickup be kept at the lowest possible value. Pickup cartridges and other crystal devices should not be stored near heaters or radiators nor should they be displayed in store windows or show cases where bright sunlight is apt to shine on them.

When leads are being soldered to the cartridge terminals during installation or service, the soldering iron should not be applied for a longer period of time than necessary to make a solid joint.

In extremely dry climates, crystal pickups have a tendency to become dehydrated (loss of natural moisture) when subjected to high temperatures. If the crystal becomes dehydrated, nothing can be done to restore it to normalcy. In climates where the temperatures and relative humidity are extremely high, crystal cartridges have a tendency to take on excessive moisture.

PN Crystal Cartridges

One of the recent developments in the crystal cartridge field is known as the Brush "PN" which differs from the Rochelle salt crystal elements usually employed in the manufacture of phono pickups. The "PN" (primary ammonium phosphate) will temporarily stand temperatures as high as 212° F. with no permanent damage. They will withstand operating temperatures of 140° to 160° F. for a considerable time without suffering any permanent damage. Compared with the Rochelle salt crystal elements a "PN" element with the same dimensions and in the same assembly will produce a slightly higher open circuit output voltage. (Open circuit means no load resistance, cable capacitance, or other impedances connected to the element.)

The capacitance of a typical Rochelle salt crystal cartridge element is approximately 1500 mmfd., while that of a "PN" element having the same dimensions is about 1/10th this value. Because of this comparatively low capacitance, a "PN" type cartridge cannot be used to replace a Rochelle salt type crystal cartridge directly for two reasons: 1. The additional capacitance of the cable or wire connected to the cartridge causes considerable loss of output. 2. The lower capacitance of a

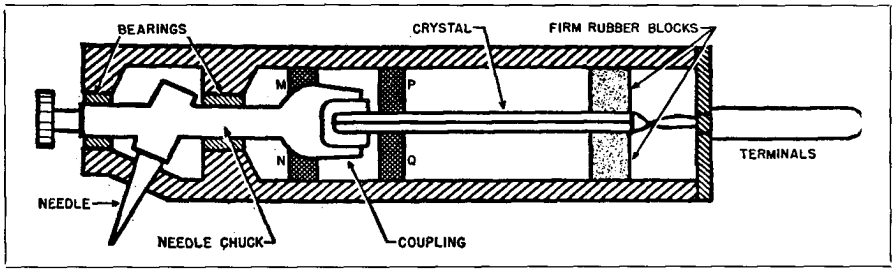

Fig. 9-6. Cross-section of construction details of typical cartridge employing rubber coupling between the needle and the chuck.

"PN" element requires that the load resistance used in pickup applications be approximately ten times the value used with a corresponding Rochelle salt unit if it is desired to obtain the same frequency response. This means values of from 5 to 50 megohms. When these high values of resistance are used at the input of a high gain amplifier, difficulties with insulation and noise pickup are much more severe than with the conventional low values. Certain manufacturers have employed "PN" crystal cartridges with equipment especially designed for their use.

We mentioned previously that there were many varieties and versions of the crystal type pickup. In any pickup the torsional motion of the needle is transmitted to the crystal through a needle chuck. The crystal is quite brittle and torsionally stiff. Therefore, if the needle were connected directly to the crystal, the pickup would present a high needle point impedance to the record. This would result in poor tracking and high record wear. For proper performance, the torsional stiffness of the crystal must be decreased by a ratio of roughly 25:1. Previously this has been done by interposing an elastic rubber block between the needle chuck and the crystal. The pickup cartridge, shown in cross section Fig. 9-6, typifies this construction. The crystal is held at its lead end by means of two firm rubber blocks. At the front end the crystal is coupled to the needle chuck by means of a soft rubber coupling. Torsional motions of the needle compress the rubber coupling. The pressure thus developed acts upon the crystal and produces an output voltage proportional to the pressure.

The record groove is capable of transmitting only a limited torque to the needle chuck. This can be seen by examination of Figs. 9-1 and 9-7. This shows the groove and the needle point in cross section. The walls of the groove are inclined at approximately 45°. Therefore, the side force upon the needle point cannot exceed the vertical pickup force, otherwise the needle rides "uphill," resulting in distortion and record wear. Torque is force times distance. The maximum theoretical torque, T_m which can be applied by the record to the needle chuck of a pickup is given

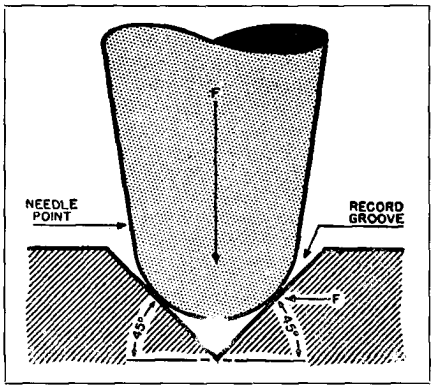

Fig. 9-7. Cross-sectional view of reproducing stylus in the record groove.

by the following formula:

$$T_m = Fh \text{ dynes-cm} \ldots\ldots\ldots\ldots (1)$$

Where: F is the vertical pickup force in dynes; h is the vertical distance from needle to needle chuck axis in cm.

The maximum torque is, therefore, limited by the needle force and by the length of the needle which, because of practical considerations, cannot exceed ½ to ¾ of an inch. The actual torque is considerably less than the value indicated by (1). Because of unevenness of records, turntables, and the inertia effects of the tone arm, a part of the torque actually generated is lost in the needle chuck areas. In a conventional pickup, what remains of the original torque is transmitted into the rubber coupling in the crystal. The potential energy due to this torque is divided between the crystal and the rubber coupling in proportion to their respective compliances.

Inasmuch as the coupling compliance is related to the crystal compliance by a ratio of 25:1, it is seen that 25/26ths of the energy received from the record is spent in compressing the rubber coupling and is wasted. The remaining 1/26th is actually applied to the crystal. If means are employed for more efficient transmission of energy into the crystal, the output voltage may be increased theoretically by the square root of the energy ratio or approximately 5 to 1. This indicates the desirability of eliminating the elastic rubber coupling. But if the elastic coupling is eliminated, the impedance presented by the crystal to the needle is too great for proper tracking. To remedy this it is necessary to resort to an impedance matching device. Transformers for electrical matching are well-known to radio engineers. However, in mechanics, the lever plays the counterpart of an electrical transformer.

In a new pickup developed by *Shure Brothers*, a torsional lever system was developed to lower the needle point impedance and to efficiently transmit the needle chuck torque into the crystal.

Lever Type Crystal Pickup

The new pickup is illustrated in cross section in Fig. 9-8. Fig. 9-9 shows an isometric drawing of the lever system. The lever consists of a single strip of thin aluminum perforated to receive the crystal and bent in a trapezoidal shape. The rear portion of the lever and crystal assembly is held in the cartridge case between two firm rubber blocks. The ends of the lever engage the needle chuck through two composition pads which serve to provide longitudinal shock isolation between the chuck and the lever but have negligible transverse compliance. For all intents and purposes, the motions of the needle chuck are faithfully followed by the ends of the lever. This particular type of lever pickup has an important structural advantage over most conventional pickups because it does not depend upon soft rubber couplings, or other materials which deteriorate with age, for generation of voltage.

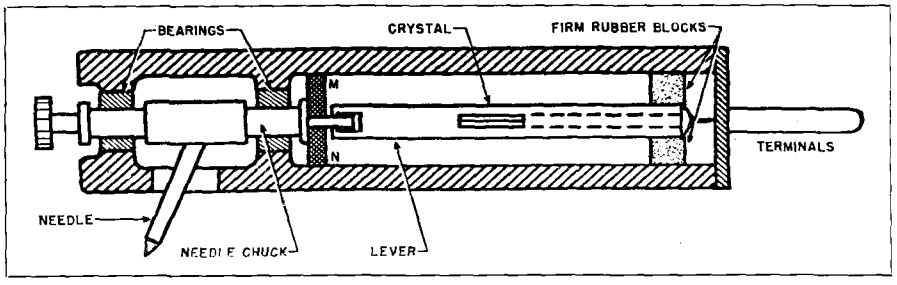

Fig. 9-8. Motions of the needle chuck ore transmitted to the crystal via lever action in this Shure-designed crystal cartridge.

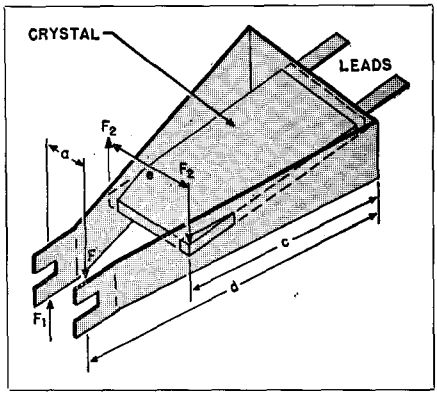

Fig. 9-9. An isometric drawing of the lever system design.

The structure of the lever pickup is dynamically simple. Since the lever is rigidly coupled to the needle chuck, the system has only one degree of freedom and can be damped therefore, with a single set of damping pads, *M* and *N* in Fig. 9-8. In contrast to this, the conventional pickup (Fig. 9-6) has two degrees of freedom; the needle chuck and the crystal which are loosely coupled by the rubber coupling member. Two separate sets of damping pads, *MN* and *PQ* are therefore required. The selection and control of two sets of damping pads has made it difficult to control such pickups in production. In the design of the lever type pickup, care is taken to hold the lateral mass referred to the needle point to a very low value. The needle chuck is made of a very light alloy. When used with an aluminum shank needle, it presents to the record a mass of less than 50 milligrams. Tests on frequency records with needle forces of one ounce indicate good tracking at all frequencies.

As mentioned in other chapters, the theoretical response curve for X-cut Rochelle salt crystal pickups is flat in terms of constant amplitude recording and should normally require equalization to raise the response in the constant velocity section of the recorded spectrum. Most commercial designs are characterized by a resonant peak in the vibrating system at approximately 3000 to 4000 cps. Advantage is often taken of this condition by broadening the peak and allowing this natural period to compensate for losses in the constant velocity range. Furthermore, since many reproducing systems are deficient in bass response, a rising characteristic in this region may be desirable where cost is a major factor.

Possibly the greatest advantage of crystal cartridges, then, is a very high output voltage obtainable and the consequent reduction in amplifier gain requirements. The customary equivalent circuit for piezoelectric pickups is a generator with no internal impedance in series with a condenser. The shunt capacitance of a cable connection to the input of an amplifier may then be considered in combination with a crystal capacitance as forming a non-frequency discriminating voltage divider.

Magnetic Reproducers and Miscellaneous Phono Pickups

The very earliest types of *magnetic* pickups employed a heavy weight which exerted considerable pressure on the record during reproduction. These often used as much as six or seven ounces of pressure for the needle to track properly and to keep the needle in constant contact with the groove.

As far as the springiness of the needle system is concerned, we must consider the weight of the needle and all of the other moving parts which combine to produce the "needle impedance." If we are to get maximum response, lowest record wear, and good, clean tone quality, these factors must be carefully considered by the manufacturer. Therefore, it is necessary that low needle impedance be maintained. The needle impedance in the modern pickup is kept to a very low value, hence, it is possible to acquire almost ideal reproduction.

Probably the best analogy for a magnetic pickup is the generator as used in our large electrical power plant.

Here we find that a wire is moved in the vicinity of a magnet. This creates a current of electricity in the wire or, conversely, the magnet may be moved and the wire fixed in a stationary position. The earliest magnetic pickups were also known as "moving iron." These had a stationary coil of wire, a magnet, and an armature which was attached to the needle. The armature moved with the needle inasmuch as it was held stationary in place. This, in effect, shifted the magnet with respect to the coil and created electrical impulses in the coil. This variable current was then amplified in the form of sound.

The modern broadcast station, especially those employing FM, use very expensive and precision made *moving coil* type pickups or variations of magnetic units. These units use a very small needle pressure and record life is greatly increased due to the low pressure of the needle as it rides in the groove. It should be pointed out, however, that there is a minimum weight requirement for any pickup. First of all, too little pressure will cause the needle to "ride up" on one wall of the groove and distortion will take place. Secondly, on a fast whirling disc, the tendency for the needle to "ride out" on the disc will cause the pickup to actually slide across the record without engaging the bottom, or even the wall, of the groove.

One of the most important characteristics that affects record wear and tone quality is the resistance of the needle system to side motion. This is known as "needle impedance." In any pickup it is not possible for the needle itself, or the armature which connects thereto, to move freely in space. Any driving system has a certain amount of spring to it. In addition to this springing action of the needle system, we must consider the weight of the needle itself which strongly resists vibration in the groove.

The inertia presented to a phonograph needle as it is pushed from side to side in the groove at rates to 8000 cps or even higher, suddenly becomes a very large force working against the record groove.

In the moving coil type of pickup, the magnet is stationary and a tiny coil is attached to the needle in such a manner that it vibrates in cadence with it. This principle is used in many of the finest pickups available today. They are widely used in broadcast stations as previously mentioned.

The FM Pickup (Frequency Modulation)

In previous chapters we described and showed accompanying diagrams illustrating the earliest type of FM or "condenser type" pickup. Actually, modern systems employ very small FM transmitters in the system. The condenser plates, of which there are two in the pickup, are mounted in very close proximity to one another. One of these plates is attached directly to the needle. The two condenser plates are electrically connected to the circuit of the miniature FM transmitter. The needle vibrating in the groove also causes one of the plates to move in direct relationship to the lateral swing of the needle. By varying the oscillator or transmitter capacitance, electrical impulses corresponding to the motions of the needle are transmitted through the system.

The Strain-Sensitive Pickup

The pickup to be described here is an amplitude type of transducer with a comparatively high output level and a linear characteristic. If for the sake of experiment it is polarized by a battery, the response has been found to be uniform and undistorted to 20 cycles. This low frequency is easily obtained by running a *Clarkstan* 78 rpm, No. 1000 A, sweep frequency record at 33⅓ rpm and observing the output on an oscilloscope.

The active element of the pickup, Fig. 9-10A, is built up on a plastic rectangular cantilever beam, carrying the stylus near one end, and firmly held in the cartridge at the other end. The strain sen-

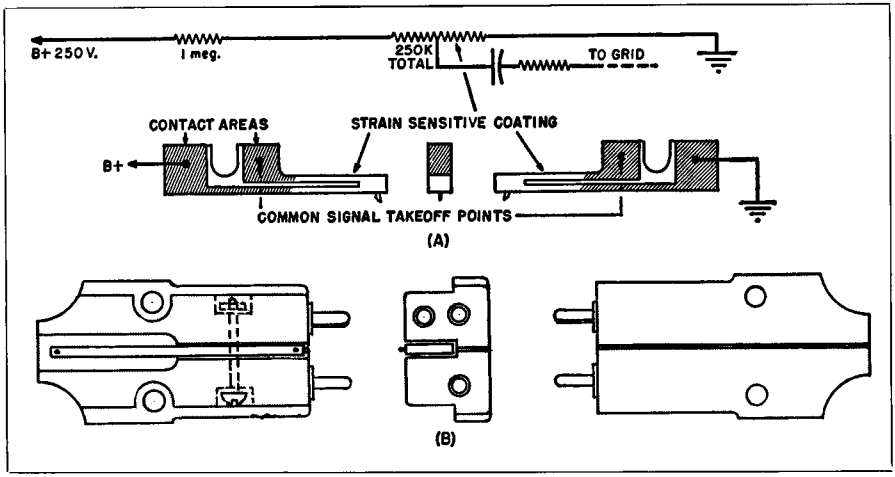

Fig. 9-10. (A) Active elements with integral stylus. (B) Cartridge with strain-sensitive element showing single holding screw.

sitive material, principally carbon, is coated on both sides of the beam. A differential or push-pull type of circuit has been devised in this coating. The terminals of the circuit are flat silver areas which make contact with similar areas in the cartridge. A single screw in the cartridge may be loosened, and a new element, carrying a new stylus, may be easily put in place. Fig. 9-10B.

This pickup is a linear amplitude type of strain sensitive transducer. It is a voltage modulator but not a voltage or current generator. Its total resistance is approximately 250,000 ohms, which does not change with audio frequency. This resistance is higher than that of earlier models. A polarizing voltage of about 45 volts dc is applied to the pickup element. This voltage is modulated by the resistance changes in the strain sensitive coating. The ac modulation voltage is taken off at the midpoint of the resistance. Although the bending strains on the sides of the pickup change the resistances, the total resistance does not change. The resistance changes in the two sides are equal and of opposite phase. One increases as the other decreases for each half of the stylus motion past its midpoint. Thus the voltages at the two ends of the resistance of the pickup remain the same, but the voltage at the mid- or single-take-off point varies following the resistance changes in the coating.[1]

A special preamplifier supplying the necessary polarizing voltage and having a unique tone control, incorporated in the preamplifier, provides wide and complete compensation for any type of record. It should be noted that all compensation is accomplished by means of degenerative feedback, not merely attenuating *RC* networks. Fig. 9-11.

The latest model of the preamplifier, shown in Fig. 9-11, utilizes either a 6AU6 or 6SH7 pentode followed by a dual triode, the second half of which provides a cathode follower output. The feedback circuits have been very carefully designed[2] to permit proper compensation for practically any recording characteristic. Recommendations for substitutions in tube types have been included in Fig. 9-11. The 12AU7 dual triode gives about 2 volts output from test

[1]R. S. John, "A Strain-Sensitive Phono Pickup," Radio & Television News, Feb., 1950, pp. 40-41.

[2]Robert S. John, Jr., "Constant-Amplitude Pickup Compensation," Radio-Electronic Engineering, April, 1951, pp. 10A-13A.

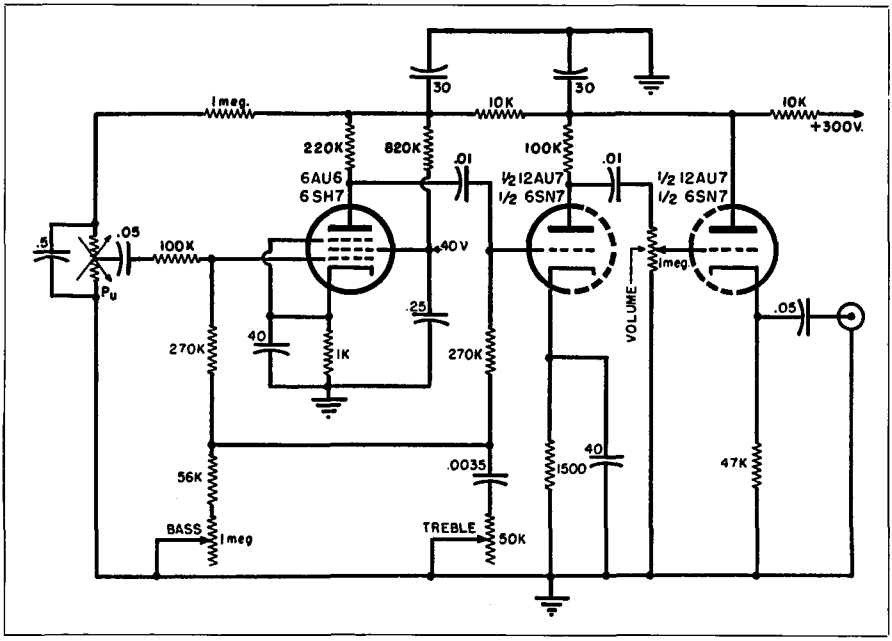

Fig. 9-11. The special preamplifier used with the strain-sensitive pickup. The cathode follower output permits the use of fairly long leads to a remote amplifier without excessive high frequency attenuation. High-impedance output may be taken from the plate of the first section of the dual triode if desired.

records with the 6AU6. With some changes in the circuit to avoid driving the cathode follower beyond cut-off, a 12AX7 could be substituted in the last stages to give 3 to 4 volts output without increasing the distortion.

This preamplifier is clean, stable and versatile, and gives completely satisfactory results both in tangible and subjective respects.

The Zenith Radionic Pickup

Similar to the FM or condenser type of pickup is the "Cobra" pickup (Fig. 9-12) designed by *Zenith* engineers. This, however, operates on AM principles. A round flat vane is attached to the top of the needle and a small coil of wire placed next to the vane. This coil is connected electrically to an oscil-

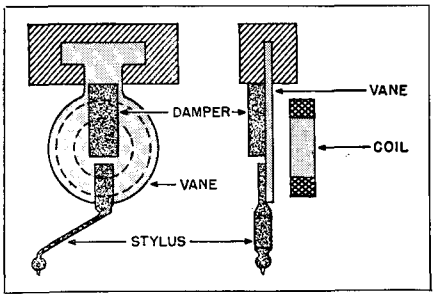

Fig. 9-12. Moving vane structure of Zenith "Cobra" pickup.

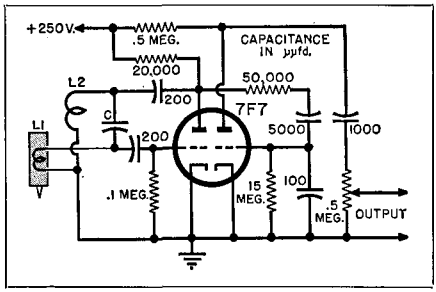

Fig. 9-13. Movement of pickup stylus amplitude-modulates an oscillating detector amplifier. Audio signal is obtained at output.

lator (Fig. 9-13). As the vane vibrates in cadence with the needle, it produces a change in the action of the coil. As a result, the oscillator produces a corresponding electrical change. These impulses or changes are then passed on to the amplifying system.

In the *Zenith* pickup we find that the mechanical impedance is extremely low. In fact, not more than about fourteen grams weight is necessary for proper tracking on the record which makes long record life possible as there is little wear to the groove.

The high resistance vane of the pickup stylus moves in direct relation to the inductance of the resonant circuit of the rf oscillator. By varying the mutual inductance between the coil and the vane, the resistance reflected into the coil changes. By so doing, amplitude modulation is produced in the oscillator by varying the loss of the resonant circuit. It is necessary then to detect the variable rf currents and to pass them on to the amplifier.

Tests show that a vertical weight of approximately fourteen grams is required to keep the needle in the groove. The mechanical impedance together with the vertical compliance reduce the noise that is radiated from the pickup and record to the extent that it is hardly noticeable to the average human ear. This applies even when the pickup arm and assembly is uncovered.

This type of reproducer can also be made to operate as a push-pull pickup. To do this, two identical coils are arranged at either side of the high resistance vane and both are tuned to the same frequency. The two circuits are then coupled either by their stray field or by external means.

The Tuned-Ribbon Pickup

A recent contribution to high quality reproduction, especially of soft and pliable discs, is the tuned-ribbon pickup developed by Maxmillian Weil and manufactured by the *Audak Company*.

A novel carrier structure, from which the oscillating member is suspended, is

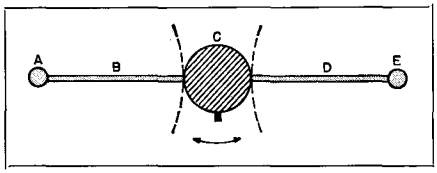

Fig. 9-14. Simplified diagram of Audax tuned-ribbon pickup. (A) and (E) are anchor points, (B) and (D) are tuned-ribbons and (C) is the stylus support.

the heart of the system. This is shown in Fig. 9-14 which illustrates the principle of operation of the vibrating system. As can be noted, the stylus displacement imparts a rotational motion around the axis of a horizontal member. This horizontal member, known as a "limiter," is located just above the stylus and between two horizontal metallic ribbons (Fig. 9-15) which are approximately .002 inch in thickness. They are securely anchored at points *A* and *E* (Fig. 9-14). At the other end of the limiter is a universal ball and socket bearing. The ends of the ribbons are carefully welded to a magnesium limiter shaft. These are located at opposite ends of the exact diameter of the shaft.

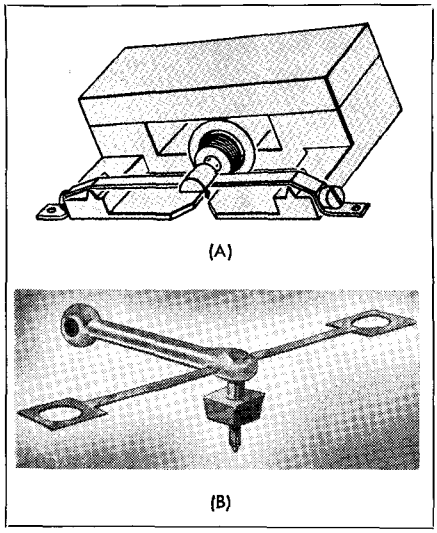

Fig. 9-15. (A) Armature and magnet assembly of Audax tuned-ribbon pickup. A bar type field magnet is used. (B) Artist's sketch shows over-all view of pickup.

This design allows the limiter to rotate freely providing the ends of the ribbons attached to it can also move in substantially parallel paths or, in other words, for a displacement of the ends of the ribbons in the order of a few mils. As the ends of the ribbons start to move in arcs away from each other, greater displacements occur and the rotation of the limiter accompanying it. Then the motion of the stylus is stopped. By allowing the stylus to move with complete freedom, a distance of approximately .002 inch each side of the center portion is attained, or far more than enough to take care of the widest amplitude to be expected on disc records. Of great importance, the stylus displacement having been reached, the system will then lock itself against further motion. The stylus is also permitted to move freely in a vertical direction for approximately the same distance as it moves laterally. Therefore, this type of pickup may be used on either vertical or laterally cut records. Accordingly, turntable equipment which is to be used in conjunction with the above pickup must be free from mechanical vibration either in a horizontal or in a vertical plane. Great care must be exercised to anchor the turntable mounting board firmly against any undue vibration which may be transmitted by the motor through the idler pulleys or belts.

One of the features of this assembly is that the dynamic mass of the system is at the truly remarkable low value of only 4.43 milligrams. A reduction in the requirement for stylus pressure, which results from this near-elmination of vibratory mass, permits the pickup to operate with a pressure of approximately ten to fifteen grams. Included, therefore, is a wide safety margin which covers every possible type of groove modulation, the degree of warping, turntable rumble, etc. Under favorable conditions, and assuming that the table were perfectly level, this pickup would track with approximately half the above pressures. This, however, would not be recommended for general use on commercial records.

This type of pickup, due to the near zero mass of the vibrating system, produces a frequency characteristic that is approximately a straight line to 11,000 cycles. This is more than is needed for the majority of transcriptions.

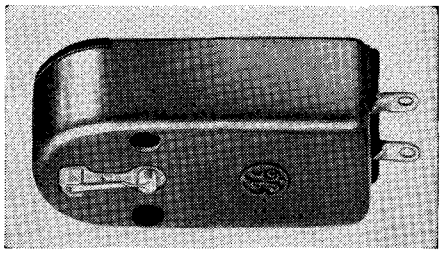

Fig. 9-16. The G. E. variable reluctance pick-up.

The Variable Reluctance Pickup

One of the simplest and most efficient pickups designed in recent years is the *General Electric* variable reluctance pickup. A natural sapphire stylus is mounted on the end of a small cantilever spring, as indicated in Fig. 9-16. The lateral motion of the cantilever directs the magnetic flux alternately through the cores of two coils which are connected in push-pull. The exploded view shown in Fig. 9-17, illustrates the mechanical design of the pickup. Note that a slotted bushing is provided in the brass chassis. The end of the cantilever spring away from the stylus is soldered to the top side of this nonmagnetic bushing. A cylindrical Alnico V magnet is soldered to the underside. Pole pieces made of Mu metal extend through the two coil cores and project on each side of the front end of the cantilever which carries the sapphire stylus.

As the stylus is driven laterally in the record groove, the cantilever moves correspondingly with respect to the pole pieces. The flux from the magnet passes through the bushing and the cantilever spring and across the small air gaps to the pole pieces, so that it divides equally between them, providing the stylus is centered. At the opposite end the cores are jointed by Mu metal yokes. The flux passes from these through the air to the other pole of the magnet. As

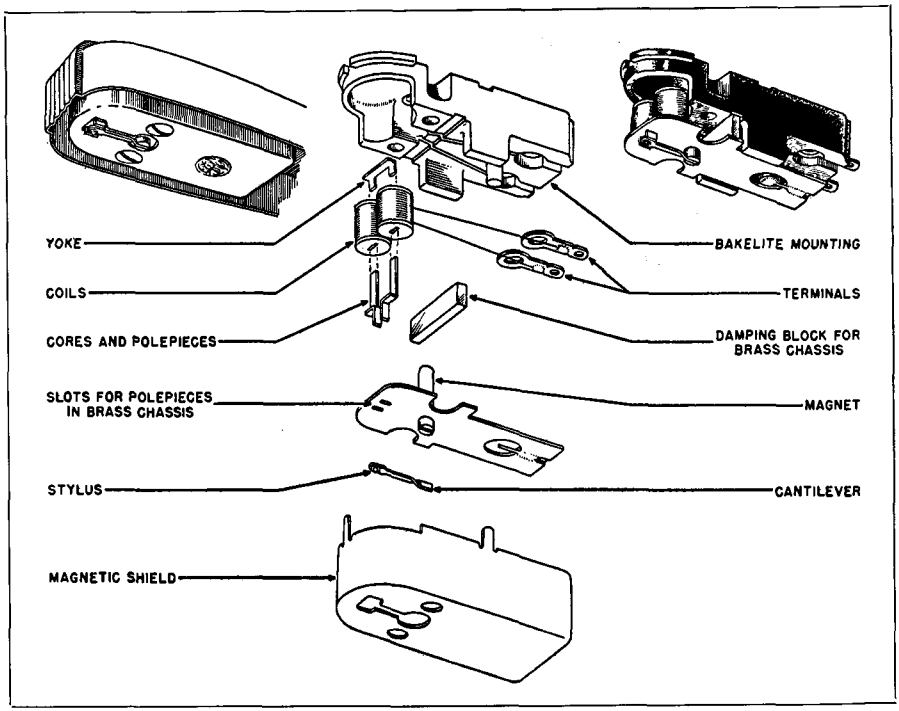

Fig. 9-17. Exploded diagram shows the construction of the G. E. variable reluctance pickup and the assembly of the various components used.

the cantilever moves off center, the flux increases through one coil and decreases proportionately through the other. The output voltage generated in the coils is directly proportional to the rate of change of flux. Thus, the pickup responds accurately to a constant velocity signal but requires equalization in a constant amplitude region.

The output voltage from the average record is approximately 11 millivolts at 1000 cps. Therefore, a gain of approximately 40 db. at 1000 cps is needed for a preamplifier and equalizer (Fig. 9-18) to make the output compare with the average crystal pickup.

An extremely low needle scratch results with this pickup due to the fact that the device responds only to vibrations in a lateral direction. By eliminating the resonant response in the unit's design, low distortion and low needle talk is provided. Since the output voltage is generated directly by the motion of the stylus mounting structure, there are no losses or long coupling members.

The extremely small mass permits excellent high frequency response. Ver-

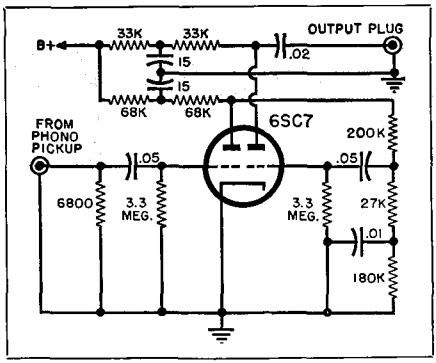

Fig. 9-18. Preamplifier and equalizing circuit used in conjunction with the General Electric variable reluctance pickup. Like extremely high fidelity microphones, this reproducer's output voltage is low.

tical motion of the stylus is equal with respect to the pole pieces and there is no voltage generated by vertical components. This, combined with the damping effect of the high vertical spring compliance, contributes a great deal to the clean quality of the response by eliminating, to a great degree, the effects of pinching distortion. Then too, the lack of vertical response also eliminates a considerable portion of the frictional noises which ordinarily are transmitted from the record surface.

The pickup chassis is coupled to the bakelite base through a single wire which is supported in the rear and by a viscaloid damping block. Hence, practically all effects of arm and supporting structure resonances are eliminated. A torsional resonant period at 10 kc. in the cantilever spring is damped out with a special viscaloid damping block. Harmonic distortion is very low in this type of pickup. It is further reduced by the use of push-pull connections.

The Pickering Pickup

Another simple and effective pickup is illustrated in Figs. 9-19 and 9-20. A very light, steel tube is suspended between pole pieces by a cantilever spring. The sapphire stylus is held in an aluminum mounting which is spun into the tube. The mass of the stylus and mounting is approximately .008 grams. The moment of inertia of the entire moving

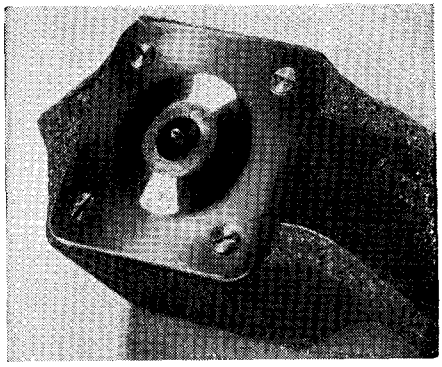

Fig. 9-19. The Pickering pickup. A linear response characteristic from 30-15,000 cycles-per-second may be obtained with this unit.

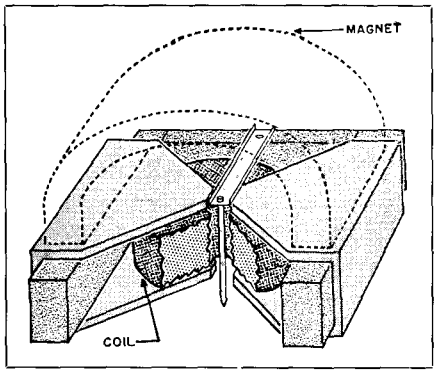

Fig. 9-20. Mechanical drawing shows internal structure of the Pickering pickup.

system (referred to stylus tip) is 11.6 milligrams and the stiffness approximates 1.8×10^6 dynes per centimeter. Resonance between the lateral stiffness and the mass of the arm appears at the sub-audio frequency of 10.5 cycles-per-second. The restoring force against vertical displacement of the stylus is supplied solely by the cantilever spring and the vertical stiffness is made higher in order to prevent the stylus from losing contact with the groove at higher frequencies.

In 16 inch models the spherical radius of the stylus tip has been determined as optimum at .0025 inch for the playing of lateral transcriptions. On the other hand, 12 inch arms are used largely on shellac records. Therefore, the stylus radius is made slightly larger or approximately .003 inch. This is necessary in order to decrease the surface noise and to further decrease tendencies on the part of the pickup to rattle.

The suspension of the armature allows vertical compliance of the stylus in order to minimize record wear and to provide accurate tracking on warped records. However, vertical motion, due to the unique electrical arrangement, does not induce voltages in the coil. This arrangement also provides protection for the stylus against any abrupt shock. Vertical pivots for the arm are of hardened alloy steel. These pivot screws operate in a precision ball bearing to minimize friction in the arm assembly.

The Dynamic Pickup

A dynamic pickup developed by *Fairchild,* illustrated in Fig. 9-21, employs a coil which pivots on its own center of gravity. The natural period is determined by the mass of the jewelled

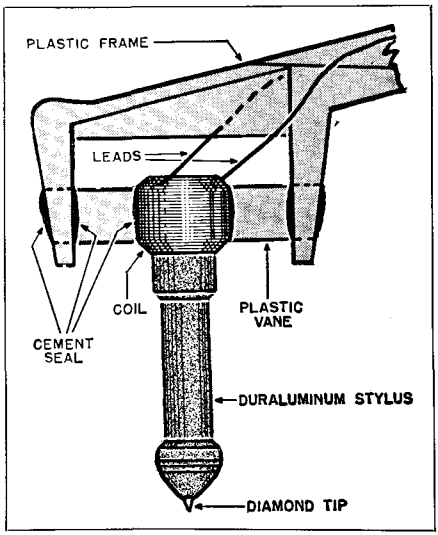

Fig. 9-21. The Fairchild dynamic pickup. Enlarged view shows assembly of unit.

tip of the stylus. This is made of diamond. The coil is wound directly over a very thin split sleeve of silicon steel mounted around one end of a short duraluminum stylus. The coil, which is wound with number 46 enamel wire, has a dc resistance of approximately 35 ohms.

Two thin plastic vanes extend at right angles to the duraluminum stylus, opposite each other and on opposite sides of the coil, then extend up to the towers of a plastic supporting bridge where their ends are anchored. The vanes are lined up with the record grooves and are in the plane of the stylus. Lateral modulation from the record causes these vanes to flex on the center line of the vanes and coil when the jewelled tip of the stylus is placed in the record groove. An oscillatory motion of the coil on its center of gravity results.

A small Alnico permanent magnet is included. The positive and negative poles of this magnet are faced with thin cushions of soft synthetic rubber. These cushions are placed in close proximity to each side of the coil. These rubber cushions are necessary to prevent abrasion between the coil and pole pieces and also serve to hold the stylus vertical to the record. The assembly is then mounted on a heavy aluminum plate. The stylus tip is in the form of a tiny diamond pin. This is ground to a ball shape and is highly polished to prevent record wear. Its life, with average discs, is practically unlimited.

An aluminum casting mounts the head on the end of the reproducing arm. A handle is provided to raise or lower the reproducer head and a locking type handle protrudes through a slot in the side of the housing.

The response of this unit is from 30 to 10,000 cycles-per-second. Features of the lateral dynamic pickup include exceptionally low mechanical impedance of the stylus due to its mounting method, the method of mounting of the pickup cartridge in the arm on a two point suspension in which the entire arm floats at the required height above the disc (the arm being mounted on cone ball bearings which reduce side drag), a permanent diamond-tipped stylus which protrudes about one-quarter inch below the cartridge case making "spotting" easy, a low stylus pressure of approximately 25 grams which results in minimum record wear and combines to make it an almost ideal pickup for dubbing from instantaneous records, and the fact that there is no overhang of the tone arm with consequent inertia which is another cause of difficulty when playing warped records or on uneven turntables.

Equalization of this or any other pickup is afforded through special equalizers usually provided by the manufacturer of the pickup. Such a unit is illustrated in Fig. 9-22. Four positions are provided: 1. To give approximately orthocoustic reproduction; 2. Highs attenuated about 6 db. at

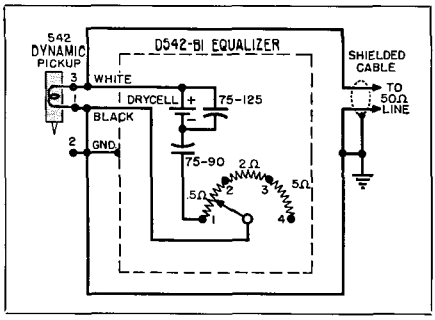

Fig. 9-22. Equalizer circuit used in conjunction with the Fairchild pickup.

10,000 cycles; 3. Flat, and 4. Highs boosted about 4 db. at 10,000 cycles.

Space does not permit a complete resumé of all available moving coil type pickups. It should be pointed out, however, that one of the primary conveniences of capacity and moving coil pickups over magnetic types is that there are no forces inherent in the structures which would tend to displace the stylus and vibrating system. With magnetic designs it is necessary to exert a restoring force sufficient to return the armature to center in opposition to the magnetic attraction to the pole pieces when it swings toward them.

This condition makes it possible to increase the stylus assembly compliance in moving coil types. A low frequency resonance with reasonable tone arm mass may be achieved without difficulty at a sub-audio frequency. In choosing a low frequency for the natural period of a pickup, it is worthwhile to consider the possibility of excitation as a consequence of sub-harmonic effects from various sources such as record hum and motor vibration.

Theoretically, the perfect magnetic and moving coil pickup designs would function so as to provide constant output from constant velocity recordings and equalization is therefore necessary only to compensate for constant amplitude recording characteristics in the lower register.

Phono Cartridges for Standard (78 rpm) and Microgroove (33⅓-45 rpm) Records

The cartridges discussed in preceding paragraphs were all designed prior to the introduction of fine-groove recordings. The following data, compiled following the acceptance of the *RCA* 45 rpm and the *Columbia* LP microgroove recording techniques, shows several widely used reproducers designed for the playing of both standard and microgroove records.

The development of recent cartridges has also included changes in reproducing stylus design with "universal" tips of 2.3 mils and truncated cone.

Two drive systems, one utilizing the bimorph crystal and the second, a more recent development, involving a single slab shear-plate crystal, dominate contemporary cartridge design.

The bimorph crystal consists of two slabs of Rochelle Salt crystal, cut and

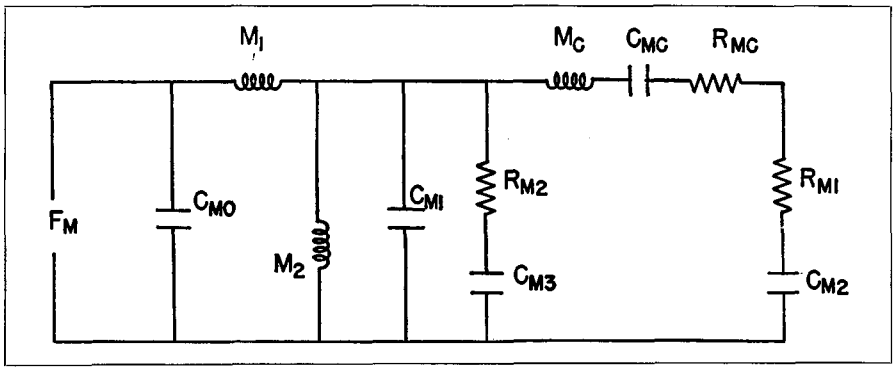

Fig. 9-23. Electrical circuit for a Bimorph phono cartridge.

cemented together. The crystal package is suspended in a harness or in pads so that when a torsional stress is applied to a corner or edge of the crystal, its mass is twisted against the suspending members by mechanical actions, which can be resolved electrically into a resonant circuit. Fig. 9-23.

Frequently this system produces a peak in the response curve and an extremely high mechanical impedance from cartridge to record through the stylus. These disadvantages are particularly troublesome in controlling the fit and wear of the tip in the record groove, when playing frequencies that are functions of the resonant frequency. The effect of the resonance may be moderated by adding resistance to lower the Q of the resonant system, or tuning the peak out of the range of frequencies to be tracked. As the suspension system is stiffened to raise the resonant frequency, the mechanical impedance of the drive system becomes more capacitive and at some low frequency this stiffness (capacitive reactance) will prevent the cartridge stylus from following the record groove. To track at the low forces recommended, it is necessary to compromise between the compliance desired for adequate tracking and the stiffness required to establish the peak frequency. In general, when mechanical impedance permits proper tracking of low frequencies, circuit parameters fix the peak frequency between 3,000 and 5,500 cps. Beyond the peak frequency, output falls off because of inductive reactance. Sharpness of the cutoff depends upon the resistance introduced into the system. A new cartridge featuring torque-drive is illustrated in Fig. 9-24.

The single-slab shear-plate crystal produces a voltage when it is compressed or expanded.[2] A torque drive harness compresses and expands converse diagonals, as in Fig. 9-25. The direction of the expansion or contraction is determined by the direction of the stylus. The result is a balanced push-pull action from lateral groove motions. Output from vertical motions of the stylus is cancelled because pressure is directed to adjacent corners of the crystal, not along the diagonals.

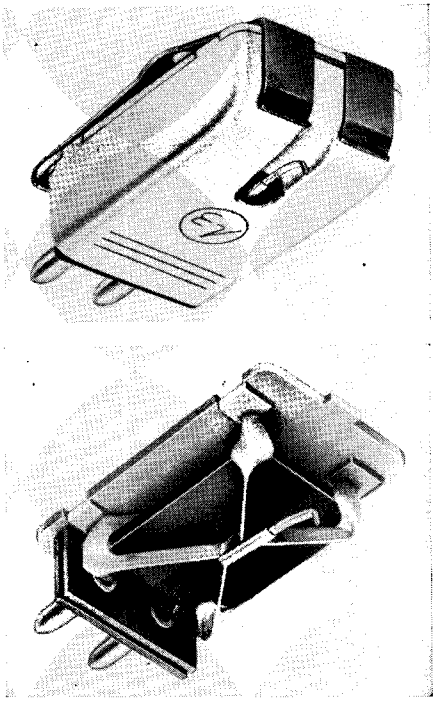

Fig. 9-24. (A) The Electro-Voice series 12 phono cartridge. (B) View of torque-drive cartridge with case removed, showing position of the crystal and its harness.

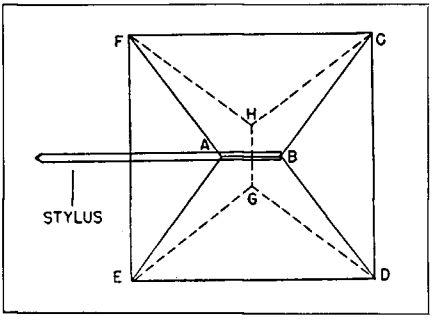

Fig. 9-25. Illustrating the action of the stylus with resulting stress placed on the cartridge. Electrical characteristics shown in Fig. 9-27.

[2]Howard M. Durbin, "Evolution of the Single-Tipped Stylus For 3-Speed Phono Systems," Service, June 1950, pp. 26-31.

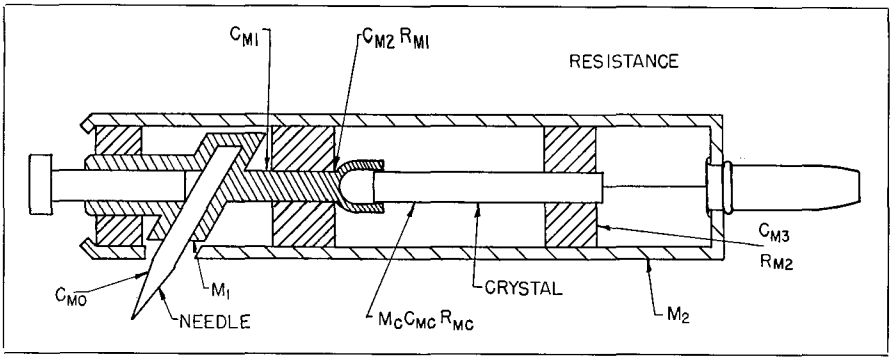

Fig. 9-26. Construction of the Bimorph type phono cartridge.

There are three essential differences between the shear plate and bimorph (Fig. 9-26) systems:

(1) In the shear-plate system, the mass moved is that of the stylus and connecting member only; in the bimorph, that of the chuck and crystal.

(2) In the shear-plate system, the capacitive element that governs the peak frequency is the stiffness of the crystal, which tunes the peak beyond the range of frequencies normally reproduced. (See Fig. 9-27). In the bimorph, the capacitive element is the stiffness of the suspension system.

(3) In the shear-plate system, compliance to track low frequencies is obtained by a mechanical ratio step down; in the bimorph, usually by parallel and series compliances.

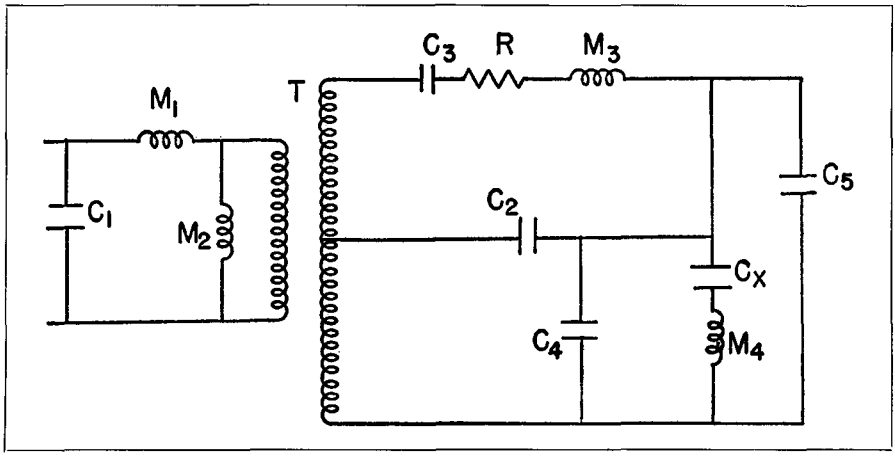

Fig. 9-27. Illustrating the action of the double torque-drive to actuate the crystal. C_1 is the compliance of the stylus; M_1 the mass of the stylus; M_2 is the mass of the pickup and tone-arm; T is the mechanical transformer; C_2 is the compliance of the top hinge at A and B in circuit (Fig. 9-25) which must bend before the force is transmitted to the crystal; C_3 is the compliance of the bottom hinge; R is the damping resistances to rotation of crystal and harness; M_3 is the effective mass of the crystal and drive mechanism for a rotating motion; C_X is the compliance of the crystal; C_4 is the compliance of the legs AF, AE, BC and BD for compressional motion; C_5 is the compliance of the legs HF, HC, GE and GD for compressional motion and M_4 is the effective mass of the crystal for the distorting motion.

Multi-Speed Changer Pickup Systems

It has been found that the ideal relationship between cartridge and record is one in which each complements the other. Thus, when the problem of playing both 3-mil and 1-mil records appeared, the use of two cartridges, each matched to the record type to be reproduced and mounted on a multi-speed turntable, offered an obvious solution. In one instance, the 3-mil cartridge employed a stiff drive system. To reduce the hiss produced by abrasives mixed in shellac records, the roll-off response of the cartridge was usually tuned to 3,000-4,500 cps.

Because the 1-mil record and 1-mil tip stylus was capable of reproducing higher frequencies, this cartridge was freed of a roll-off characteristic. Increasing the mechanical advantage or parallel compliance of the drive system provided extra compliance which permitted proper tracking at the low tracking force required.

Each cartridge in this two-unit setup was mounted in an individual tone arm. The tracking force of each cartridge was established independently of the other to satisfy the requirements of 3-mil or 1-mil records. Although this system brought multi-speed changers to the mass market, the bewildering array of tone arms and instruments did tend to discourage wide-spread acceptance.

In the search for more convenience of operation, it was found that the two cartridges could be combined into a single unit, with a 3-mil tip stylus mounted on the chuck of a 1-mil record-matched cartridge, opposite the 1-mil stylus. The development permitted the cartridge to be rotated and to use the tip appropriate to the groove size, as will be discussed in later paragraphs of this chapter.

In another method a dual-tip stylus was employed. A 3-mil tip, on a short length stylus, was mounted to a conventional length 1-mil tip stylus. The added leverage of the 3-mil tip produced higher compliance for that tip, permitted tracking 3-mil records at the low tracking force possible with 1-mil records and made possible volume compensation by reducing output from 3-mil records to that available from 1-mil records. This concept contributed substantially toward simplified operation of multi-speed changers. Resonance experienced with the single-stylus dual system was found to be negligible because of the extremely close coupling between the two tips. Mass control, an effect of the extended tip, gave a roll off at very high frequencies.

Universal Tip Styli

The exact groove-matching tip combination produced playback systems with which the public could enjoy all three-speed records. To eliminate the nuisance of selecting a specific stylus tip, cartridge manufacturers directed their attention to the design of a single-tipped stylus capable of playing all types of records.

In studying the problem, it was necessary to consider the condition that no surface of a universal tip can be common to both 1-mil and 3-mil grooves, and thus tips must favor one groove size. This results in a tip that performs well on 3-mil records, but is over-size, skates or fails to track high frequencies in 1-mil records; or gives excellent results on 1-mil records, but rattles and bottoms in grooves of 3-mil records.

An equal compromise between 1-mil and 3-mil tips, the 2-mil radius seemed to offer advantages as a compromise stylus. Tests indicated that it tracked well in 1-mil grooves (riding much higher in the groove than did the matching tip). However, it tended to reproduce more pop from scratched records. Moreover, it rattled and bottomed in 3-mil grooves.

In reproducing high frequencies, the 2-mil tip was found to be not as satisfactory as the 1-mil tip. The audible effect of this characteristic was found to be dependent upon the response of the cartridge driven by the tip stylus and cannot be distinguished in those cartridges possessing a mechanically controlled roll-off response.

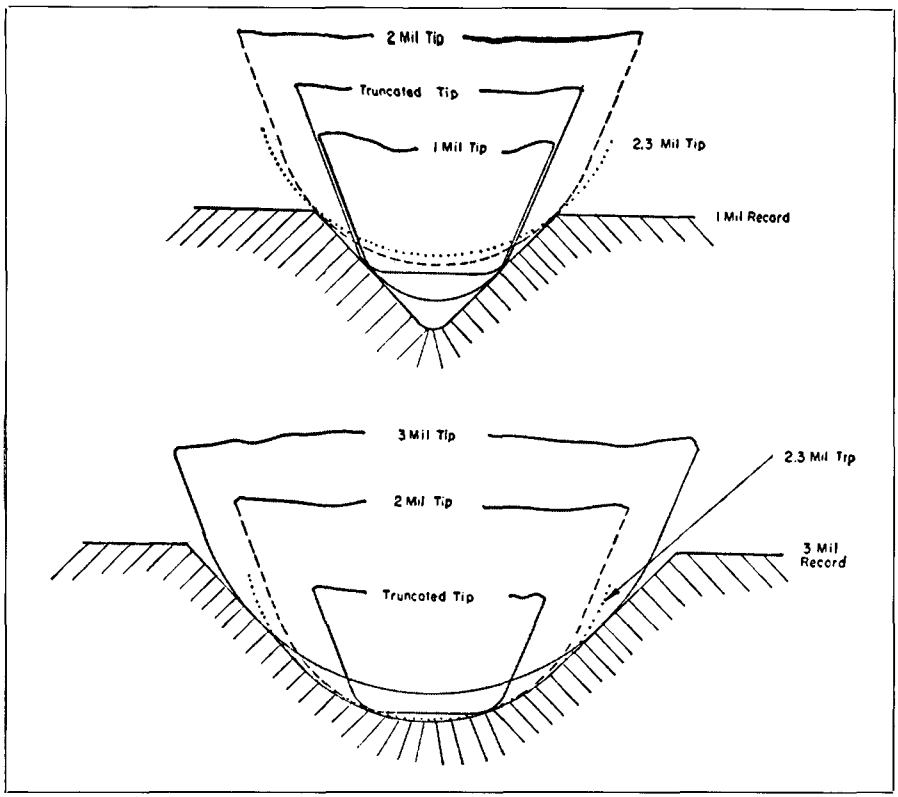

Fig. 9-28. Showing the comparative fits of 3-mil, 2-mil and 2.3-mil truncated type styli in 1-mil and 3-mil record grooves. (Courtesy, Electro-Voice)

To permit the tip to fit lower in 1-mil grooves and prevent it from bottoming in 3-mil grooves the truncated cone design (Fig. 9-28) was investigated. It was found that the size of the flat ground on the truncated cone influences the response if the tip is used in a free, wide range generating system. A wide flat tip approximates the performance of a 3-mil tip in 3-mil grooves and exhibits roll-off response characteristics in 1-mil grooves. If the flat is reduced to dimensions favoring 1-mil grooves, it produces wide range response from fine groove records and a roll-off on 3-mil records. The roll-off frequency depends on the relation of flat dimensions to groove dimensions.

Many cartridge manufacturers decided to hold the cone "flat dimensions" to a limit favoring 1-mil grooves to obtain the wider response available and because a tip favoring 3-mil grooves tends to skate on fine groove records. The truncated cone could therefore rest on the same area of 1-mil groove walls at the 1-mil tip and be less susceptible to bottoming in shallow grooves.

The performance of the truncated tip in the pinch-effect regions of a record was found to be disappointing. In the pinch-effect region or that portion of the groove cut where the recording stylus moves laterally, recorded grooves are narrower than silent grooves because of cutting stylus dimensions. When the playback stylus is forced upward in the pinch effect regions, the truncated cone exerts much greater unit pressure against the groove wall than the radius tip. Cartridges in which the vertical stiffness of drive systems and stylus

might be extreme, produce accelerated record and tip wear because the groove wall must lift the combined weight of cartridge, arm and loading of arm inertia.

Since the truncated tip sits immediately above the bottom of 3-mil grooves, the dimensions of the flat subject it to rattling, a common source of distortion, and permit the tip to be thrown from side to side in grooves pressed by stretched stampers. Increasing the size of the flat to favor 3-mil records, may produce a tip wider than the dimension across the pinch effect region of 1-mil grooves, but poor tracking or skating on fine groove records will result.

The rattle and associated distortion caused by the truncated tip on some 3-mil records, dictated the use of a stylus tip more capable of universal application. This was found in a 2.3-mil radius tip. Performance of the tip has been found to be similar to that of the 2-mil type on 1-mil records, a characteristic to be expected because of the slight difference in tip radii. When used with vertically stiff cartridges and styli, the 2.3-mil tip reduces record and tip wear below that of the truncated tip because the radius tip assists in lifting the stylus in the pinch effect regions.

Players produced today are equipped with 2-mil truncated cone, 2.3 mil and wide-angle type cone tips. Recently, the 2.3 mil tip has been accepted by manufacturers previously specifying 2-mil and truncated cone tips.

As stated earlier, for ideal reproduction qualities, the cartridge and stylus tip must be matched exactly to groove requirements. The universal tip stylus

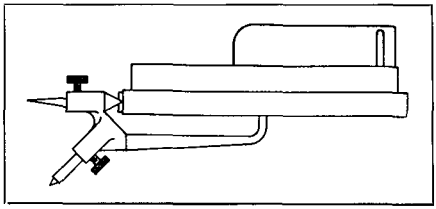

Fig. 9-29. Early type of acoustical reproducer with provision for two styli, one for vertical the other for lateral records.

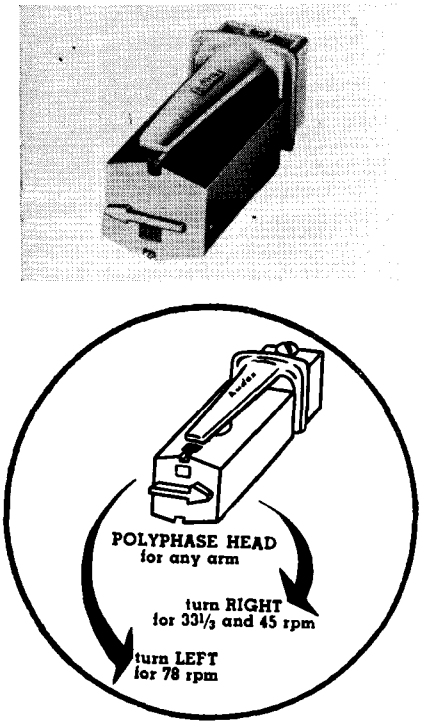

Fig. 9-30. (A) The Audax Polyphase reproducer ready for mounting within tone arm. (B) Showing how either stylus for standard or for LP is selected by simply rotating cartridge.

appears to offer a compromise between fidelity and ease of operation.

The universal tip cannot give optimum performance on all records and is simply a convenient means for playing mixed records on record players. It should never be used on professional discs.

Dual Styli Phono Cartridges

The development of the phono pickup for records of multi-standards is not new. In the 1920's records were available of the vertical (hill and dale) type such as the *Edison*, the somewhat similar *Pathe* record of an embossed type requiring a 16 mil point and records of the *Victor* type (lateral). An acoustical reproducer having a single playback stylus, Fig. 2-7, was widely used in lateral record playback. Later, these reproducers were made with two reproducing styli connected to a single dia-

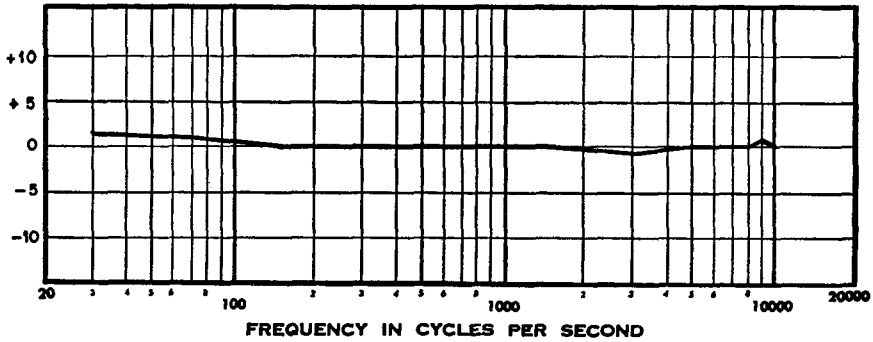

Fig. 9-31. Response curve of the Audax Polyphase cartridge based on constant stylus velocity.

phram as in Fig. 9-29. With the universal acceptance of laterally cut records for home consumption and later the transition to "electrical" recording (see Chapter 2) there followed the period of 78 rpm standard records.

The year 1949 re-introduced the problem of multi-standards and the need for phono cartridges that would give optimum seating of styli to grooves of varied dimension. By using a common generator and multi-styli, means were developed to reproduce the new standards for groove shapes. Examples are:

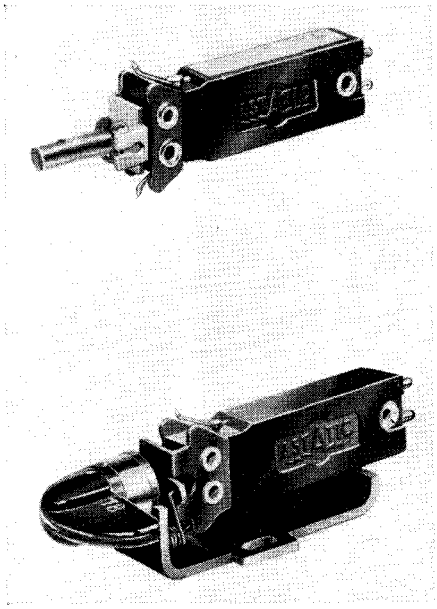

Fig. 9-32. Construction of the Astatic ACD-1J dual phono cartridge. (Courtesy, Astatic)

Audax Polyphase Reproducer

This is a single magnetic type cartridge having two styli selected by rotating the cartridge as shown in Fig. 9-30. It exerts a pressure for all discs of 6-8 grams. Sapphire or diamond styli may be used in various combinations of points which are replaceable. Output from the reproducer is about 20 milivolts with response nearly flat from 20 to over 10,000 cycles. The conventional vibrating armature mass is made stationary and fixed in the coil. A very small piece of magnetic alloy "relays" the modulated flux to the stationary armature. The stylus bars are highly tempered cantilever springs of non-magnetic material. On the ends, a mu metal shank serves as the medium to relay the oscillating flux to the armature. The response curve of the Polyphase, based on constant stylus velocity is shown in Fig. 9-31.

Astatic Dual Crystal Cartridge

This reproducer, designed for three speed record playback, Fig. 9-32, is of moulded bakelite design and has quick disconnect connector pins. It has replaceable sapphire or precious metal styli—one of 3-mils, the other of 1-mil tip radius. A needle pressure of 6 grams is placed on the record by either stylus. Its output, at 1,000 cycles is

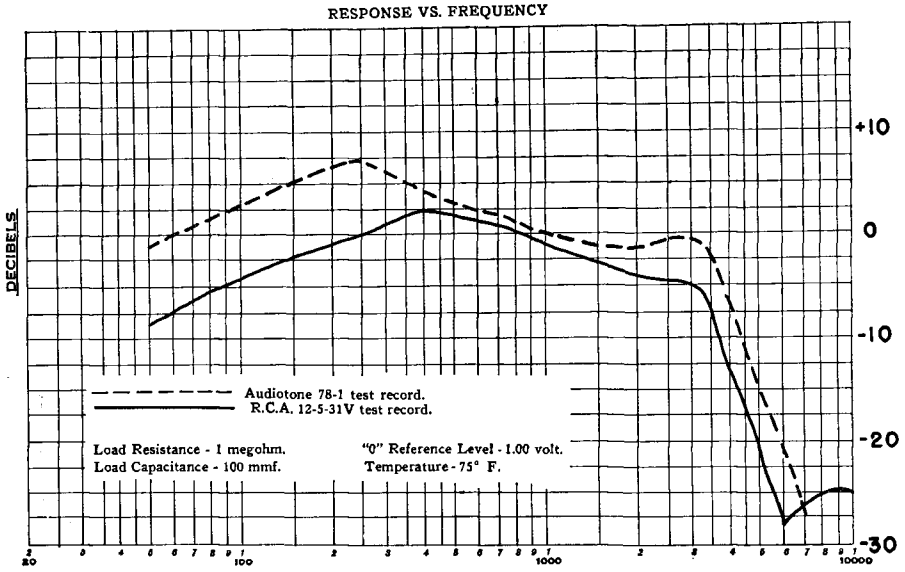

Fig. 9-33. Response curve of the ACD-1J cartridge.

approximately 1.0 volt for either stylus. This cartridge also rotates 180° for selection of stylus. The response curve is shown in Fig. 9-33.

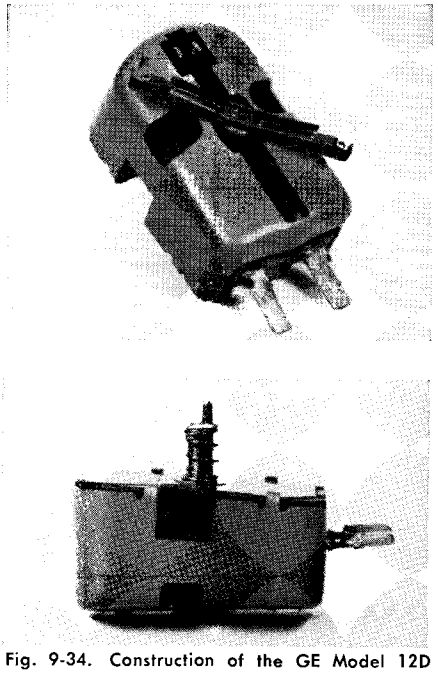

Fig. 9-34. Construction of the GE Model 12D triple play cartridge. (Courtesy, General Elect.)

GE Triple Play VR Cartridge

Either of two styli may be placed in playing position by turning a positioning knob on Model 12D (RPX-050) General Electric variable reluctance cartridge, Fig. 9-34. Stylus pressure of 6-8 grams and high stylus arm compliance combine to reduce record wear to a minimum. The styli retract between guards if the tone arm is dropped. Reproduces usable audio range with uniform velocity response, Fig. 9-35. The output circuit voltage is 10 millivolts minimum. Its dc resistance is 340 ohms and its inductance 520 millihenries. Low impedance units for professional and broadcast use have a dc resistance of 220 ohms and inductance of 250 millihenries. The cut-away drawings of the cartridge and its dimensions are shown in Fig. 9-36. Either sapphire or diamond styli may be used in this cartridge.

The above cartridges are typical of many so-called dual phono units having a common generator and two selective styli. Another solution to the problem of accurate groove fits and stylus pressure is covered in the next chapter.

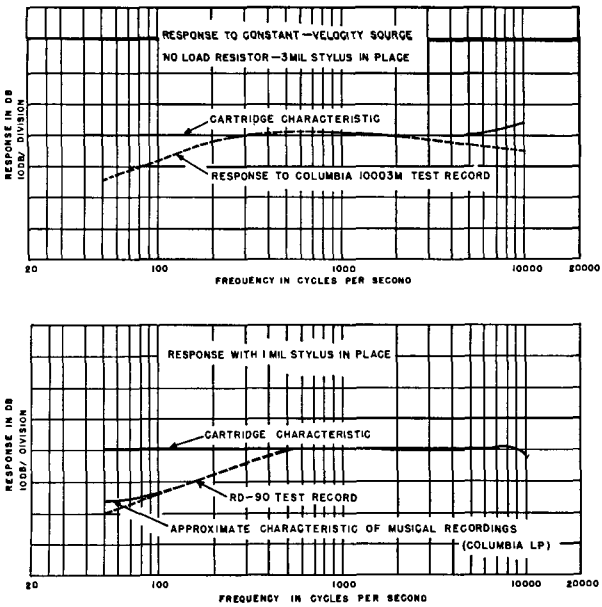

Fig. 9-35. Frequency response curves for both 1-mil and 3-mil styli of the Model 12D cartridge.

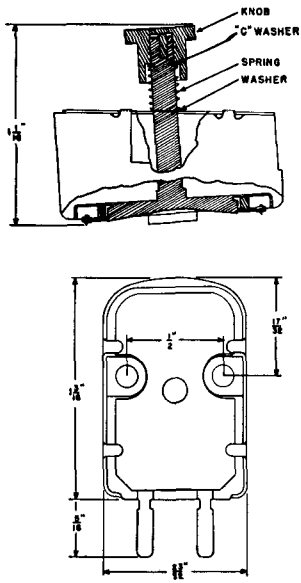

Fig. 9-36. Cut-away drawing shows the novel construction of the Model 12D cartridge.

CHAPTER 10

Tone Arms and Reproducing Styli

Reproducing styli, phono pickup tracking error, groove skating and record wear.

● Engineers, several years ago, realized that in order to obtain the utmost fidelity and minimum record wear, some means should be provided to offset the tendency of the pickup tone arm to "ride up" on a groove during reproduction. Many theories have been advanced regarding the effects of "tracking error," with the result that the layman is often confused when attempting to understand the fundamental rules that govern the final results.

So-called straight arm phono pickups were commonly used up until a few years ago. Little thought was given to the effects of proper "tracking" and "groove skating." The distortion caused by improperly designed tone arms meant but little, as few instruments were capable of attaining high fidelity. The old conventional tone arm was designed somewhat as illustrated in Fig. 10-1. Note that the tone arm swings in an arc (A-B) and there is only one point

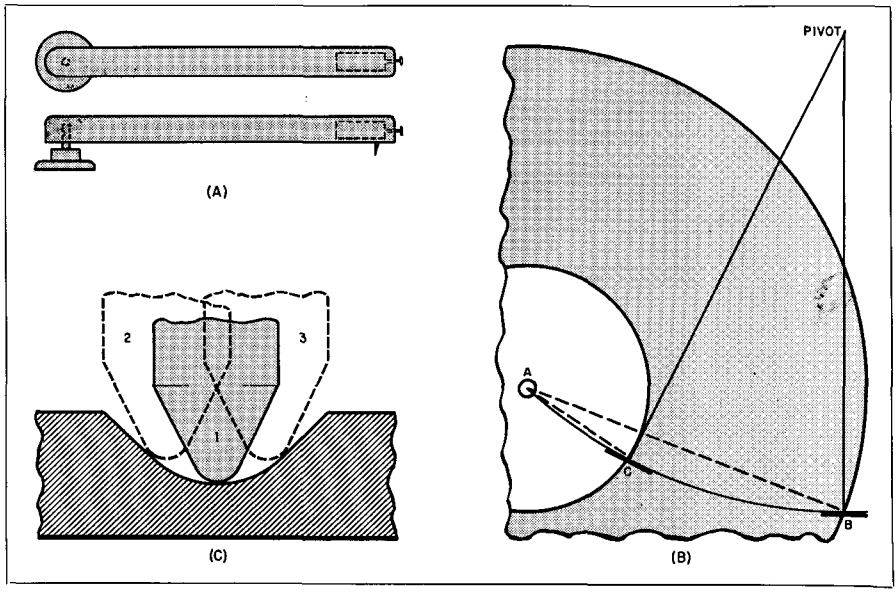

Fig. 10-1. (A) Straight tone arm. (B) How not to mount a tone arm. (C) Variations of groove skating.

on the record, that near the center of swing, where the needle or reproducing stylus will be seated correctly within the groove. At any other position of the arm travel, the stylus will either be forced to the right or to the left of that position. In other words, the pick-up element or cartridge will not be at right angles to the direction of travel.

This tracking error becomes greater as the two extremes are reached by the needle, as the angles become greater, with a resulting increase in distortion and record wear. At all positions, except that at which the needle appears at right angles to the groove, there will be a tendency for the needle to ride up on the walls of the groove. This becomes rather serious as the outside or inside grooves are reached as the action becomes more exaggerated.

Groove Skating

Groove skating results from improper tracking. Under such conditions it is impossible for the needle to reproduce properly as a great part of the applied needle pressure is from the sides or "walls" of the groove. This has a tendency to actually steer the needle away from its normal resting condition (Fig. 10-1C). There can be only one pivot point for the tone arm. Obviously then, the only remedy to offset the tendency of the needle to ride up on the walls of the groove is to change the straight arm design to one which will "offset" the angle; thus enabling the needle to approach a closer correct angle with relationship to the groove.

Fig. 10-2 illustrates several offset heads of improved design. Further improvement is obtained when the point of the reproducing needle contact is swung through a lower arc, one farther from the normal hub line or center hole of the record, as illustrated in Fig. 10-3.

We now find that the new arc starts below D and the needle travels approx-

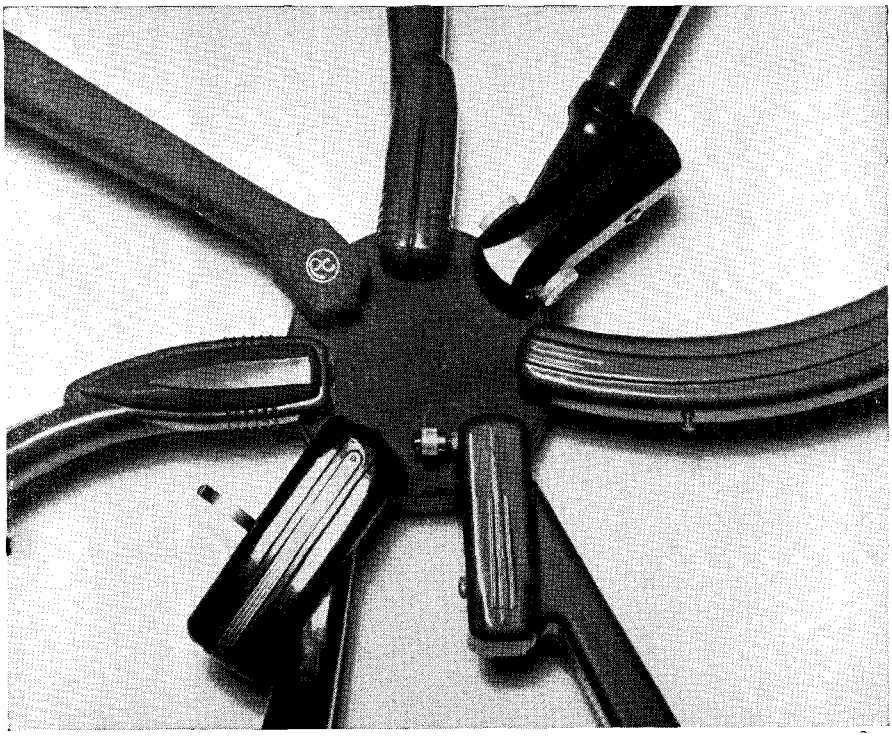

Fig. 10-2. Note the variation of offset angles on these representative tone arms. (Courtesy, Radio & Television News)

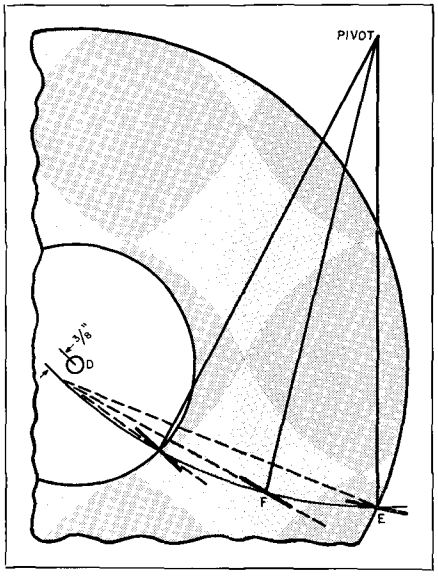

Fig. 10-3. Reproducing needle swings in arc below hub line.

imately ⅜″ below the arc shown in Fig. 10-1. Three possible positions for the needle are illustrated; one at the outside groove, another at point F, and the other at the inside groove of the record. Note that we approach a right angle to the groove as the arm travels throughout the record and a better average is maintained due to the offset position of the head.

Considerable record wear will result if the foregoing considerations are not met. If a needle, especially a sharp one used on commercial pressings, is allowed to ride up on the sides or walls of the groove, it can only result in continuous wear on the record material at the point of needle contact. Sound modulations are cut into one side of *each* groove, not at only one side. Naturally then, we must take the required steps and make certain that the needle is allowed to engage both walls at the same time with even pressure or, more accurately, to see that the needle is "seated" properly.

The effects of improper tracking become even more acute with transcription and home recording blanks as the record material is considerably softer and the walls of the groove are more subject to mechanical distortion than are commercial hard shellac pressings.

An improvement can be made in the playback setup by employing pickups of the lightweight class—those having a needle pressure of from 6 grams to 2 ounces. On the other hand, too little pressure is not recommended as this too can actually increase the wear on the groove walls. The pickup, therefore, must have enough point pressure to permit the needle to "seat" in the bottom of the groove and to be able to guide the complete pickup arm across the record in a horizontal plane.

The use of sapphire playback styli (needles) is recommended for all types of soft disc materials, due to the ability of the stylus to maintain a correct shape for hundreds of playings. While these are more expensive initially, the cost is offset by the saving in replacements.

As an analogy, we might point out that in early machines, such as the cylindrical record phonographs and other dictating machines, the locus of the reproducing stylus is in the straight line with perfect tangency to the groove at every point on the record. In the case of reproduction by means of the conventional pivoted arm, the locus (the path) of the needle point is the arc of a circle. Perfect tangency to the groove is possible at only one or two points on the record, as previously mentioned. Tracking error is the result of a pivoted tone arm and is obviously an inverse function of the length of the tone arm.

Styli and Record Wear

The perfect reproducing needle or stylus would be one which would maintain its shape throughout many thousands of playings. Regular commercial records, as purchased in music and radio stores, use a shellac base rather than the soft lacquer material used to coat the surfaces of home and transcription discs. The purpose of the shellac, other than that of a bonding

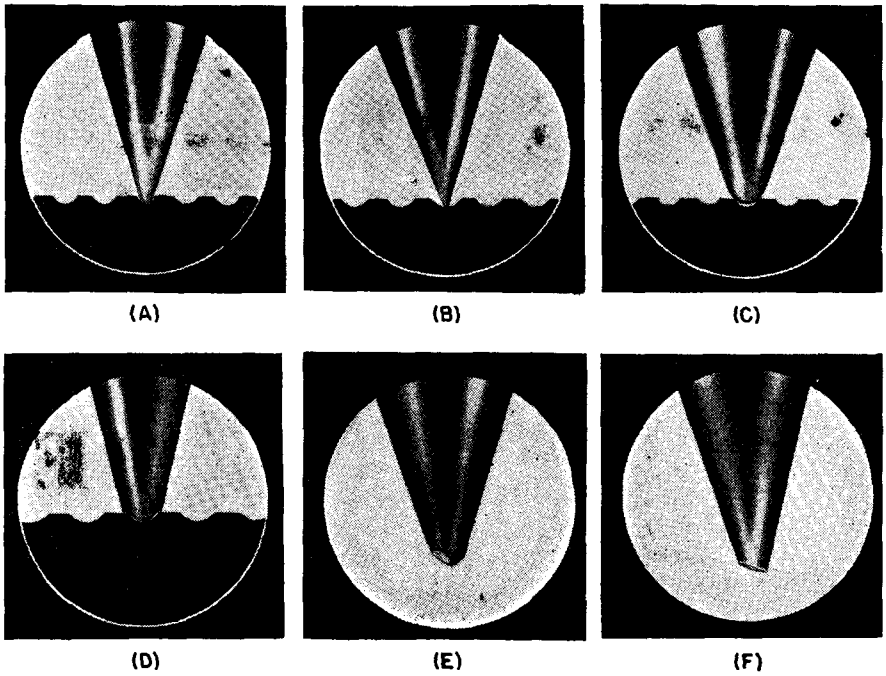

Fig. 10-4. Microphotographs of reproducing styli showing several conditions as met in everyday practice by the professional studio and by the home recordist. (A) A correctly seated stylus in a properly cut groove. (B) How a sharp point on the stylus can cut into the soft surface material. (C) Indicates the condition when a too rounded stylus rests on the walls of the groove. (D) A worn stylus ground to fit into the groove. (E) A chipped or defective stylus point. (F) Indicates a worn out or damaged needle point. (Courtesy, Permo Inc.)

material, is to make possible the inclusion of an abrasive which is added to the compound for purposes of sharpening a steel playback stylus.

The conventional sharply pointed steel reproducing needle (Fig. 10-4B) is familiar. When initially employed on a record, considerable hiss is present due to the sharp needle point of the stylus engaging the bottom of the groove of the record. Due to the speed and grinding action of the revolving record there will be a gradual wearing of the needle point. While initial surface noise reduces somewhat during playing, distortion will result as the reproducing stylus becomes worn. The abrasive material in the record will grind off the sharp point of the needle and the stylus will assume a rounded and somewhat distorted point. If permitted to run for any length of time, the walls of the groove will be torn and worn from improper seating, hence the necessity for changing needles, as is done with the conventional phonograph.

With the so-called *permanent* point types (sapphire, diamond, etc.) of stylus tips, this condition has been somewhat alleviated. The stylus tip wears slowly due to its ability to maintain its initial shape for many hundreds of playings. Such styli are less hazardous to the life of the record. Normally, looking directly from the end cross-section of a groove, we find that it is U-shaped. Obviously a sharp pointed needle, when used on a new record, engages only the bottom of this groove. Inasmuch as modulation is on the *walls* of the groove, there is no proper seating or contact with the walls of the groove for many revolutions of the disc.

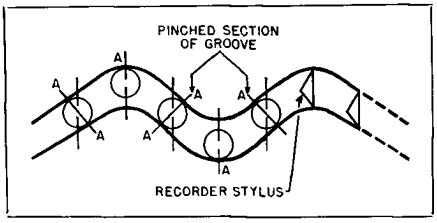

Fig. 10-5. How rounded-point needle (AA) skids like a toboggan in modulated groove.

Pinching Effect

A flat tool-like chisel point is used, as explained in Chapter 7, to cut the groove in a revolving recording blank. The face of the *cutting stylus* cuts a groove of even width providing no sound is impressed on the cutter. However, when modulation takes place the actual width of the groove varies with frequency, disc diameter, etc., as illustrated in Fig. 10-5.

A *reproducing stylus* has a rounded point, therefore, it is almost impossible for this point to seat properly in the modulated groove. The illustration, Fig. 10-5, serves to show the effect. Note, for example, that the width of the recording stylus at the maximum swing results in a certain dimension in the groove. Comparing this to the point of a reproducing stylus, we find that the tendency is for the point to ride out on the crest, or maximum modulation point, of that particular crest. Actually, the point skids from side to side in the wider portions of the groove. Another possible cause of distortion, when the recording has been made with a chisel-shaped cutter and reproduced with a round point, occurs when the needle rounds a curve, as illustrated in Fig. 10-5.

There is no "cure-all" for the elimination of record wear and distortion. Suffice to say that the chief remedies are as follows: A perfectly level turntable free from mechanical vibration, a pickup having a tone arm with an offset head which permits a minimum degree of tracking error, and properly designed reproducing styli. By paying particular attention to these requirements, the recordists and music lovers may be assured that they have taken the necessary steps for the ultimate in reproduction.

One other important factor having an effect upon fidelity and its relation to record wear and distortion is an improved design of the pickup cartridge and reproducing stylus. By employing a "knee action" as illustrated in Fig. 10-6 we can eliminate somewhat the pinching effect. A widening and narrowing of a groove results from a spade-like cutting point. The driving force of the record causes the stylus to move in a vertical direction and occurs at a frequency which is double that of the lateral motion of the groove. If this vertical movement of the stylus produces an electrical output (as it does in many common crystal pickups now on the market), the result is an appreciable amount of second harmonic distortion in the reproduced sound. At the same time, the pinch effect produces a mechanical reaction on the record and stylus, as previously explained. The magnitude of the pinch effect is inversely proportional to the distance from the center of the record. It may be seen by inspecting worn records that the greatest wear occurs near the center

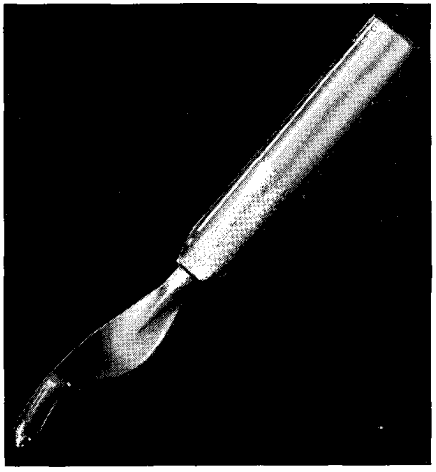

Fig. 10-6. Playback needle with "knee-action" feature.

of the record. The pinch effect is undoubtedly responsible for greatly accelerating this record wear. In most of the newer pickups now used the mass of the moving parts is small enough so that the vertical inertia reaction on the stylus and record due to the pinch effect is of negligible magnitude and does not contribute appreciably to record wear.

The "needle talk" is greatly reduced by employing such design. This is particularly true at the lower frequencies because of the reduced vertical reaction on the record. In relieving this reaction, the stylus and armature move vertically as a unit up to a frequency of between 500 and 800 cps rotating about a horizontal transverse axis. As the frequency increases, this axis moves closer to the armature until, at very high frequencies, the axis of rotation passes through the armature.

Record life has thus been increased considerably by careful design of pickups and their associated reproducing styli.

Permanent (So-called) Styli

Contrary to general opinion, the phonograph stylus, regardless of the material or structure, can never be considered as a permanent stylus. It is well known that when two materials rub together, particularly in dry friction, one or both must wear. In the case of a phono record, the phonograph stylus in contact with the groove is actually under pressures of from 6,000 to 25,000 pounds per square inch. (Assuming a flat of .0015″ to .003″ on both sides of the point at a pressure of 1½ ounces.) This area is subject to friction generated temperatures in the order of 1000° F. to 2000° F. Wear of the record and the stylus must take place! Wear of the stylus and record is merely the displacement and loss of the material from which they are made. When the delicate, lateral modulations in a record groove are worn or displaced, distorted reproduction occurs. When the stylus point is worn excessively, the portion of the point in contact with the groove will not only fail to follow the fine modulations of the groove, but will actually further the displacement or wear of the modulations. Thus, accumulative bad results occur, comprising distorted reproduction and excessive record wear.

All reproducing styli are subject to immediate change when used on a phono record. As an exaggerated example, if a standard phono stylus were held in contact with a running grindstone for an hour or so, it is understood what would happen to the stylus point after playing 100 records.

The largest percentage of wear of a phonograph record and stylus during their normal life occurs during their earliest usage for the simple reason that the area of the radius of the stylus in contact with the groove is the smallest, and hence subject to the highest pressure and highest temperature. As the stylus wears, as it must, a larger area of the point contacts the groove and there is a corresponding reduction in unit pressure and temperature, which obviously retards the wear of both the record and the stylus.

The irrefutable evidence, proving the point that there is no permanent phonograph stylus, lies in the fact that the so-called "closed chuck" or "irremovable stylus" era that was ushered in immediately after the close of World War II has already run its course. Most manufacturers of pickups, cartridges and tone arms containing styli which were permanently fixed and could not be removed by the individual user, have redesigned their units to make the special type styli replaceable. The reason is a simple one—the stylus simply wore out although the pickup did not, and the public resented and resisted the idea of buying an expensive replacement cartridge and paying a serviceman several dollars for removal of the old and installation of the new unit in order to get a new phonograph stylus. There are those who have played up to the strong appeal of the idea of not having to make stylus changes. Engineers and manufacturers, on the other hand, have always known that the very nature of the stylus and the record surface con-

tact, and their inevitable reaction one upon the other, creates a fixed condition that wears out both the record and the stylus. The simple reasoning that results in public acceptance that shoes, clothing, radio sets and record players are not permanent, should and does apply to life expectancy of the phonograph record and stylus.

There is unlimited evidence to substantiate the statement that "phonograph records and styli wear out as the direct result of dry friction surface contact of the needle in the revolving spiral groove of the record."

Cartridges with permanently fixed needles (usually diamonds) can be and are being manufactured today for the professional user who knows the importance of proper care of his equipment and when stylus replacement should be made. Such a user does not throw away a cartridge that is as good as new in order to replace the stylus. Professional technicians cannot be classed with public users, who range from the very youngest to the very oldest, from the uninformed to the most intelligent, and from the most careless to the most careful.

Equipment of any kind, and partciularly phonograph recording and reproduction units, must be manufactured to fit the two distinct classes of users. The quick demise of the "closed chuck" or "irremovable stylus" cartridge for general public use strongly emphasizes that truism.

The phonograph stylus and the phonograph record are only two links in a chain of components that perform under a variety of conditions and combinations. Each part and each combination of parts introduces variables that contribute to the declaration that there is not, and could not be, a permanent stylus. Some of these variables are:

1. The inevitable result of two moving materials in frictional contact.
2. The purport of the stylus development. The intent may be to accept record preservation or stylus life, or vice versa.
3. The dimensional and metallurgical quality control of stylus production.
4. The abrasive nature of records and the quality control exercised in record manufacture.
5. The mating characteristics of varying record compositions with varying stylus point materials.
6. The wear variations that develop in initial plays.
7. The loose materials in the groove of a new record and the accumulation of material resulting from wear.
8. The extent to which the accumulated material in the sound groove is augmented by dust laden atmosphere.
9. The effect of weather conditions, such as temperatures and humidity, upon the abrasive, plastic and chemical properties of the record.
10. The vertical pressure and tracking characteristics of the tone arm and pickup.
11. The mechanical functioning of various changers and between identical changers, such as vertical stylus pressure, turntable eccentricity, trip load and tone arm pivot friction.

The greatest of these causes of wear is the natural one. It is the result of the dry friction contact of the stylus in the revolving spiral groove of the record. Other dry friction contacts are familiar:

1st —The most extensively used dry friction is that of shoe leather on the world's floors and sidewalks. Shoes are long lived, but not permanent. To put the same load on shoes that a phonograph stylus carries, a man would have to weigh several tons.

2nd—When air brakes lock on the freight train you have dry friction and very quickly you have flats on the wheels.

3rd—When you pull a sled over snow and ice you have water lubrication. When you pull it on dry land you have dry friction, flat runners and hard work.

4th—When you make a piece of furniture you sandpaper off the surface to make it smooth. That is dry friction. After you varnish the furniture you put on wax or furniture polish so that the wiping off of dust will not sandpaper it.

Why have this dry friction? Why not lubricate the stylus like an automobile crankshaft? Let us see: When lubricated bearings carry a load over 500 pounds per square inch, forced lubrication becomes impractical. Many phonograph stylus points under light weight tone arm conditions carry in the order of 6000 pounds per square inch. Were there no other objectionable factors in the use of a lubricant, it would be impossible to get the lubricant where it would do any good. The dry friction of the phonograph stylus and record is a fixed condition, which means that the record and stylus will wear out.

Engineers and manufacturers of high grade phonograph styli, taking into consideration the variables and dry friction reaction referred to in the foregoing, must keep constantly in mind that a good phonograph stylus must possess the following qualities:

1. It must be kind to the ear. It must have a satisfactory and consistent response.
2. It must be kind to the record. It must, when used, effect a low rate of wear on the record.
3. It must be kind to the purchaser. It must have a long-playing life.

The listening result is dependent upon all the components involved, which are (1) the record, (2) pickup cartridge and tone arm, (3) the stylus, (4) audio system, (5) manual control for tone and volume, (6) speaker, and (7) mechanism which revolves the record.

Development of the Reproducing Stylus

It is interesting to review the history of the stylus since the inception of acoustical reproducer machines. The emphasis on reproduction dominated the choice of phono styli for use on both cylinder and disc-type records during the years from 1900 to 1925. The cost of the diamond and its rapid breakdown of records created a demand for a less expensive and more practical stylus. The *Pathe Company* first introduced a natural sapphire stylus, but this was not practical, due to fabricating difficulties and fracture failures when in use. Styli made of steel and of varying lengths were next introduced to achieve "soft" "medium" and "loud" reproduction. These were marketed for many years, even though it was necessary to change the stylus after one or two record plays.

The split bamboo and cactus styli then entered the market in response to a demand for a stylus that would mask record scratches and acoustical resonance which the steel stylus emphasized. The next step was toward increased stylus life by using tungsten wire held in a rigid shank. The organic bamboo, cactus, steel and tungsten wire styli were widely used over a long period of time in spite of their short life and damage from shock.

Extension of the range of frequencies and over-all improvement in recording created by the electronic pickup (1926-1949) as well as the vacuum tube amplifier, microphone and loudspeaker called for better phono styli. The diamond stylus, for the reasons stated above, was not practical for the new type record players. The absolute necessity for a long life and practical point material was created with the introduction of automatic record changers for commercial and home use. Steel styli were chromium plated and stylus life extended to approximately 25 plays at the expense of record life.

Engineers and metallurgists next explored the possibilities of the natural

occurring platinum group alloys, and thus began the period of greatly extended stylus life. The next step was the development of wear-resistant osmium alloyed with other metals to provide a single purpose, specific material for long-life phono stylus points. Synthetic sapphire has also been widely used for point materials although it duplicates the public usage problems present in the natural jewel. However, synthetic sapphire is more uniform than the natural jewel and more adaptable to commercial fabrication.

Phono Stylus Tip Materials

The Diamond:

The diamond is the hardest and most wear-resistant material known. It could logically follow that it would be the ideal phonograph stylus point tip. The conflicting conditions under which the needle tip must function and the very hardness and wear-resistance of the diamond creates a paradox which limits its practical public usage. The long wear-in of the diamond sustains the very small contact area (Fig. 10-7A) which results in rapid wear of phonograph records. Broadcasting stations and other professional installations, where the accent is on sound reproduction rather than record life, use the highly polished diamond stylus to advantage.

The Sapphire:

The sapphire, in reality a substitute for the diamond for stylus point material, has a high degree of hardness and resistance to wear. It is more fragile than the diamond and frequently fractures from shock in normal public use. The synthetic sapphire has substantially the same chemical and structural properties of the natural jewel except that it is more uniform. The wear-in of the sapphire stylus point, while shorter than that of the diamond, sustains the very small contact area (Fig. 10-7A) over a long number of record plays. The reslutant wear on the record groove is further increased because the microscopic crystal fragments that have worn off the stylus and deposited themselves in the groove create a phenomenon known as secondary abrasion. The sapphire point, riding in the groove in which the loosened crystal fragments have become deposited, accelerates both stylus and groove wear. The brittle nature of sapphire also causes the leading and lagging edges of the contact areas of the stylus point to become sharp, resulting in further breakdown of the record groove.

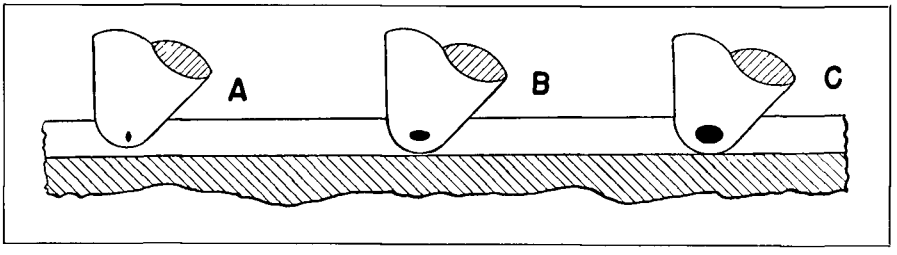

Fig. 10-7. (A) The small area shown represents one of the two sides of the stylus in contact with the record groove before appreciable wear is apparent. The unit pressure in the order of 25,000 pounds per square inch and temperature in the order of 2,000° F. on these minute contact areas cannot be long sustained without early breakdown of the record groove. (B) The darkened area shows a larger area of wear than shown in A. This increase in contact area decreases the unit pressure to the order of 6,000 pounds per square inch and reduces the temperature to the order of 1000° F. Wear on the record groove is consequently reduced although reproduction efficiency of the stylus point is not impaired. (C) The darkened area shows a larger area of wear than that shown in A or B. This further increase in contact area further decreases the unit pressure and temperature and further reduces wear on the record groove. The amount of stylus wear represented by the darkened area might suggest that the stylus point is worn, but this is not so. While the stylus will eventually wear out and distortion will become discernible in high frequency reproduction at varying periods of life depending on individual ratings, stylus wear is safely extended far beyond the area portrayed.

CHECK CHART AND RATINGS* OF PHONOGRAPH NEEDLE POINT MATERIALS

NEEDLE POINT MATERIAL	(1) Approximate Melting Point (Degrees F.)	Approximate Maximum Knoop Hardness in the Hard Condition	Does It Tend to Oxidize When Used on Records?	Does It Conduct Heat Easily?	Will It Chip Under Normal Play Conditions?	Is It Fragile Under Normal Play Conditions?	Does It Favor Long Record Life?	Does It Wear-in Quickly and Compensate for Tracking Error?	Does It Have Long Life Expectancy?	Is It Metallic?	Dies It Favor Low-Mass One-Piece Needle Design
Bamboo	(2)	(3)	Yes	No	No	Yes	Yes	Yes	No	No	No
Cactus	(2)	(3)	Yes	No	No	Yes	Yes	Yes	No	No	No
Steel	2800	700	Yes	Yes	No	No	Yes	Yes	No	Yes	Yes
Bronze	2800	450	Yes	Yes	No	No	Yes	Yes	No	Yes	Yes
Gold Alloy	1945	450	No	Yes	No	No	Yes	Yes	No	Yes	Yes
Chromium Plate	3430	1000	Yes	Yes	Yes	No	No	Yes	No	Yes	No
Tungsten Carbide-Cobalt Alloy	4700	1800	Int.	Yes	No	No	No	No	Int.	Yes	Yes
Platinum Alloy	3225	450	No	Yes	No	No	Yes	Yes	Int.	Yes	Yes
Iridium Alloy	4450	950	No	Yes	No	No	Yes	Yes	Int.	Yes	Yes
Ruthenium Alloy	4500	950	No	Yes	No	No	Yes	Yes	Int.	Yes	Yes
Rhenium Alloy	5740	500	Int.	Yes	No	No	Yes	Yes	Int.	Yes	Yes
Tantalum Alloy	5425	700	Int.	Yes	No	No	Yes	Yes	Int.	Yes	Yes
Tungsten Alloy	6170	600	Int.	Yes	No	No	Yes	Yes	Int.	Yes	Yes
Topaz	3000	1300	No	No	Yes	Yes	No	No	Int.	No	No
Ruby	3700	2000	No	No	Yes	Yes	No	No	Yes	No	No
Sapphire, Natural or Synthetic	3700	2000	No	No	Yes	Yes	No	No	Yes	No	No
Diamond	6700	6500	No	No	No	No	No	No	Yes	No	No
Osmium Alloy	4900	1300	No	Yes	No	No	Yes	Yes	Yes	Yes	Yes

(1) Designates melting point of main constituent.
(2) Decomposes below a red heat.
(3) Not measured, but relatively soft.
Int. = Intermediate, depending on specific conditions.

(*) Compiled and rated from accumulated experience and best available data. Ratings are based on normal, average, commercial conditions.

Fig. 10-8. Performance of various types of phono styli.

The Osmium Alloys

Osmium, in its elemental form, is dense, hard and wear-resistant. This rare, natural element has been allowed with other metals to further increase its hardness and wear-resistance, thereby producing an alloy specifically designed and manufactured for phonograph stylus point tips. These alloys are comparable to the diamond in toughness and resistance to fracture; they are self-polishing in use on phonograph records; they are fine-grained, homogeneous and ductile enough to prevent sharp leading and lagging edges developing on the stylus point.

A unique quality of phonograph stylus points made of osmium alloys is that they wear-in rapidly and wear-out slowly. The quick wear-in increases the area of contact (Fig. 10-7A, B, and C) and reduces unit pressure and temperature. The gradual wear-out extends over a very long period of record plays, resulting in prolonged record and stylus life.

Summary

A long-life phonograph stylus point, to resist high unit pressure and temperature, must have each and every one of the attributes of a high melting point, hardness and resistance to oxidation. The diamond, the sapphire and the osmium alloys possess these qualities. The diamond stylus is particularly valuable for vinylite records where wear-in is not a problem. 45 rpm and 33⅓ rpm vinylite records with a diamond stylus make an ideal combination.

The chart illustrated in Fig. 10-8 serves as a check for the performance of phono stylus point material. It was prepared by engineers of *Permo Inc.* and is more fully described in their Bulletin No. 2.

Professional Tone Arms for Triple-play Cartridges

In earlier paragraphs we discussed the basic requirements for the phonograph tone arm and discussed the importance of tracking and its effect on record wear. Most of the data referred specifically to requirements for tone arms and reproducing styli with standard 78 rpm records.

A great deal of attention has been given to the tone arm in recent months and engineers agree that the tone arm is one of the most important links in the chain to high quality reproduction. With the trend toward the use of the three speeds, 33⅓, 45 and 78 rpm, manufacturers have perfected highly effective tone arms to achieve maximum results. A few are discussed in the following paragraphs.

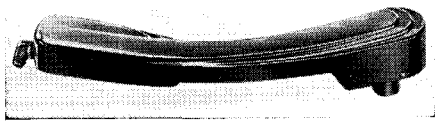

Fig. 10-9. The Astatic Model 7-D phonograph pickup.

Astatic Model 7-D Pickup

This three-speed reproducer is a newly designed cast aluminum tone arm employing the type ACD crystal cartridge. This cartridge is of the turnover type. The arm design affords minimum tracking error and balanced groove sidewall pressure to insure top-quality reproduction and long life of the record and stylus. See Fig. 10-9. The cartridge rotates in an improved snap-action turnover mechanism for positive positioning of styli. For best results this type of assembly should be mounted on a level motor board and suspended on live rubber shock mounts to isolate the motor board from the cabinet and to prevent violent jarring from affecting the performance of the player.

This type of tone arm is widely used and is representative of the more popular pickups in use at the present time.

The Model 7-D provides good response for both narrow-groove and standard-groove records. Response curves using *Audiotone* 78-1 and *RCA* 12-5-31V test records are shown in Fig. 10-10.

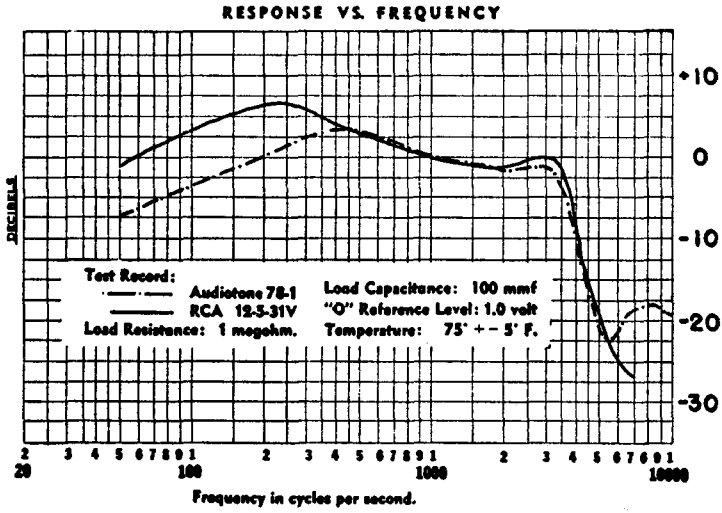

Fig. 10-10. Frequency response curve of the Astatic Model 7-D pickup.

Specifications

1. Frequency Range: 50 to 7000 cps. 1.0 Volt *Audiotone* 78-1 and *RCA* 12-5-31V test records.
2. Output Level at 1000 cps. (1 volt)
3. Stylus Pressure: 6 grams.
4. Styli: Replaceable "A" Type
   Narrow-groove side — 1 mil radius sapphire tip.
   Standard-groove side—3 mil radius precious metal tip.
5. Leads: 13" super-flexible, single conductor shielded.
6. Finish: Light brown Hammerlin.

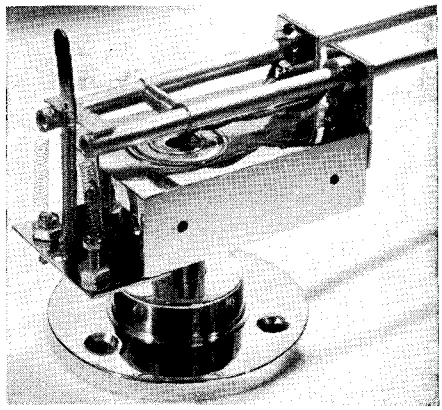

Fif. 10-12. Detailed construction of the Goodell Duplex reproducer orm.

A Duplex Reproducer Arm

While never sold commercially on the audio market, an interesting development in the form of a special duplex mechanism devised by the *Minnesota Electronics Corporation*, serves to illustrate one approach to the problem of mounting two separate cartridges into a common tone arm, as shown in Fig. 10-11. The assembly consists of two individually compensated arms, one for microgrooves, the other for Standard 78 rpm. The two reproducer arms are built on one lateral bearing and support mechanism. By this means individual adjustment of LP and Standard sections is conveniently accomplished by coil springs—minimizing problems ordinarily introduced by the mass of counter weights. One arm was factory adjusted

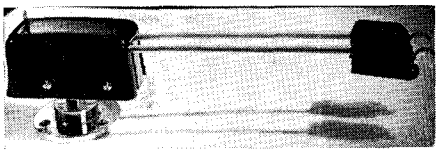

Fig. 10-11. The Goodell Duplex reproducer orm.

at 5 grams for LP records and the other at 15 grams for Standard as measured at the stylus tip.

Self contained built-in stops prevent exceeding the elastic requirements of the spring structures. Vertical bearings, see Fig. 10-12, consist of knife-edge sections of phosphor bronze flat springs. Large dual dust sealed ball bearings in lateral pivots provide smooth tracking freedom and a heavy solid steel individually machined support block damps out exterior vibrations, introduces desirable high lateral mass and provides precision mounting of all components. Anodized aluminum tubing was used in this experimental tone arm for the individual arms. This minimized the vertical mass and resulted in light easy tracking of warped records without chatter or tendency to "hang" after passing over abrupt rises in record surfaces. As may be seen in Fig. 10-11, both heads are offset and were originally designed to mount the *Pickering* cartridge.

Tone Arms and Reproducers for Professional Applications

Several manufacturers in recent years have conducted extensive research toward the perfection of tone arms as well as cartridges that meet all standards for microgroove as well as standard recordings. A few are discussed and illustrated in the following paragraphs and serve as examples of the professional type reproducer.

Audax Polyphase Reproducer

Several precision made tone arms have been developed in conjunction with the Polyphase cartridge described in Chapter 9, Fig. 9.30. The Model L-6 with a 12″ arm (available also in 16″) is illustrated in Fig. 10-13. This design

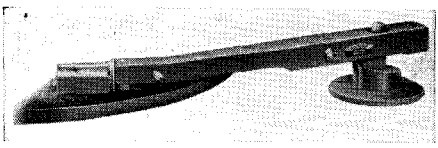

Fig. 10-13. The Audax Model L-6 tone arm and repraducer.

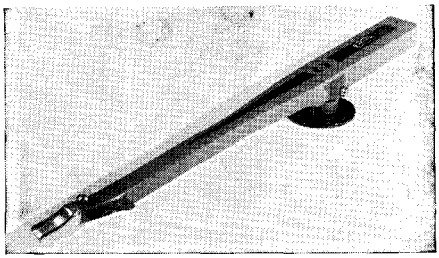

Fig. 10-14. The Audax studio arm with "tuned-ribbon" reproducer.

features an adjustable counterweight so that it may be mounted without overhang. The arm is highly sensitized in order to meet the high compliance of the Polyphase cartridge.

Another *Audax* arm designed especially for broadcast use is illustrated in Fig. 10-14. The one illustrated is designed to mount a tuned-ribbon reproducer, see Chapter 9, Fig. 9-15. Where sufficient mounting area is available, this type of tone arm is recommended, but due to its great overhang cannot be used on crowded motor boards. The arm will mount any of several heads either for lateral or vertical recordings.

Pickering Model 190 Arm

Designed especially to give optimum performance on both microgroove and standard records is the new *Pickering* 190 pickup arm. As mentioned in previous chapters the most common causes of distortion in the operation of conventional arms are poor tracking and excessive record and stylus wear. These undesirable qualities are a result of improper lateral and vertical moments of inertia and an incorrect relationship between the two. Many arms, especially

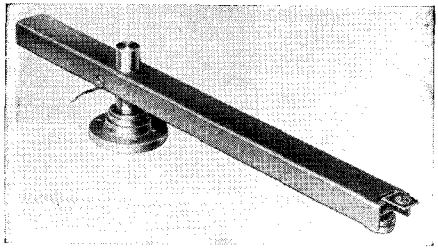

Fig. 10-15. The Pickering Model 190 tone arm.

the so called straight types, cause tracking error which causes needless distortion. The new arm illustrated in Fig. 10-15 permits the ratio of vertical-to-lateral moment of inertia to be as low as possible. By minimizing the vertical mass it is possible to track even badly warped records without imposing extra vertical load on the grooves. The pivot friction is lower than 3 gram centimeters and the arm is statically balanced about the vertical axis to eliminate tendency to jump grooves when subjected to bumping or jarring. The offset head reduces tracking error to less than plus or minus 2½°. According to the manufacturer, in this design the stylus point is protected against contact with anything but the record groove. It cannot strike the turntable mat or center-pin. The Model 190 pickup arm is designed especially for mounting the *Pickering* cartridge reproducers as shown in Figs. 10-16A and 10-16B. These are designed and manufactured for Standard records with a 2 to 3 mil styli and for microgroove records with a 1 mil styli. Both sapphire and diamond points are available. Ingenious mounting clips permit adaption to a large variety of arms and permit adjustment of the stylus position for minimum tracking error. For details on the construction of the *Pickering* cartridge see Chapter 9, Fig. 9-20.

The output voltage from series 120 and series 140 cartridge reproducers is 70 millivolts with a stylus velocity of 10 cm per second at any frequency between 40 and 10,000 cycles per second. When used with the 190 arm this cartridge will track well with 15 grams pressure. The series 140 cartridge is designed to track with 6 grams of pressure. The frequency at which the lateral stiffness of the moving system resonates with the mass of the cartridge alone is approximately 50 cycles per second. The mechanical details showing the mounting of the cartridge to the tone arm are illustrated in Fig. 10-17.

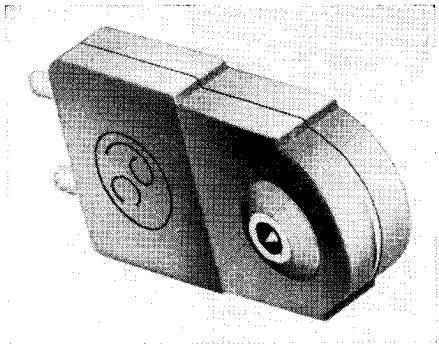

Fig. 10-16A. Pickering Model S-120M cartridge with sopphire stylus.

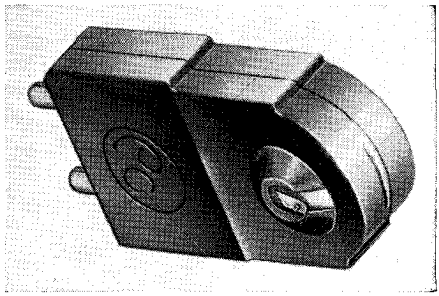

Fig. 10-16B. Pickering cartridge with replaceable stylus.

Specifications for the proper loading and equalization of these cartridges will be found in the Chapter on "Preamplifiers."

The Gray 106-SP Arm

This transcription arm in earlier models is widely used in broadcast and recording studios. The tone arm illustrated in Fig. 10-18 has been especially designed for the *GE* Variable Reluctance Cartridge. It features an adjustable counter-weight spring that provides adjustment for accurate stylus pressure.

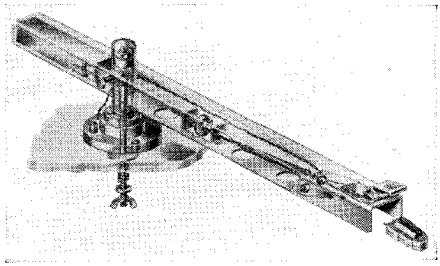

Fig. 10-17. Mechanical construction of the Pickering 190 Tone Arm.

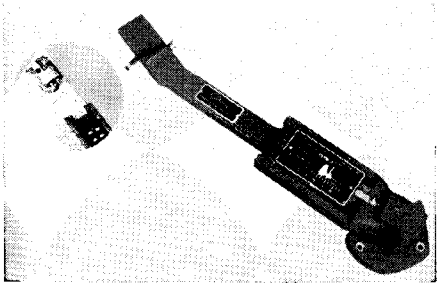

Fig. 10-18. The Gray Model 106-SP tone arm, with GE cartridge.

By employing special cartridge slides it is possible to also use this arm with the *Pickering* cartridge. In addition to featuring means for adjusting the stylus pressure, it also has an adjustable pivot height and low vertical inertia. This type of tone arm is ideally suited to portable type disc record-reproduce machines as there is no overhang of the tone arm.

The height of the arm and means for leveling are provided by knurled thumb nuts threaded into the bottom of the base. With a high compliance reproducer the resonance is at about 18 cps. Precision ball bearings in a polished race with locked cone point adjustment are carefully preset for minimum friction without excessive play. Vertical force is adjusted by a readily accessible ¾″ diameter knurled finger grip knob located visibly within the yoke. This adjusts a spring bias which is effective only in the plane of vertical motion. With a cartridge weighing 14 grams the arm will cover a range of from approximately 10 to 45 grams stylus force. A heavier cartridge will increase these figures by the amount that the cartridge weight exceeds this figure. When the clip-on-weight is adjusted for LP records the range becomes about a minus 10 grams to plus 25 grams. This allows for a cartridge weighing almost an ounce to be used and still secure a stylus force of 6 grams.

Gray Viscous-Damped Transcription Arm

The Gray 108-B transcription arm incorporates a new departure in suspension principle. A ball and socket arrangement provides means for introducing a damping action. An adjustable cone point pivot allows the degree of damping to be readily controlled and at the same time provides for practically frictionless movement in any plane. The tone arm is illustrated in Fig. 10-19. Damping in the horizontal plane virtually eliminates troublesome low frequency arm resonance which frequently causes groove hopping and distortion on loud passages. With low vertical stylus force, accidentally jarring or bumping the turntable no longer causes groove jumping. Vertical damping prevents damage to record and stylus due to accidentally dropping the arm as well as the added improvement in the tracking of warped records. Hence, all groove widths, all record diameters up to 16″ and all normally used stylus forces are accommodated by one arm which is noncritical for turntable leveling. Each slide and cartridge assembly is preset to the desired stylus force. Slide and contact arrangement accommodates most commonly used cartridges including *GE*, *Pickering*, *Clarkstan*, etc., as described in Chapter 9.

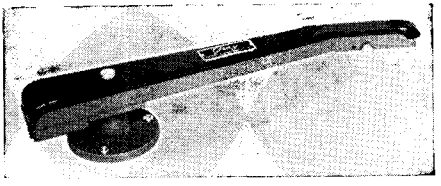

Fig. 10-19. The Gray Viscous-damped tone arm Model 108-B.

CHAPTER 11

Magnetic (Tape and Wire) Recording

The theory and practice of various methods employed in magnetic recording on wire, tape, and non-metallic magnetically coated materials.

● Present methods of sound recording by magnetic means are the result of discoveries of Valdemar Poulsen, a Danish scientist, who, in 1898, experimented with magnetic recording on wire.

It is well known that hard steel can be magnetized to form a bar magnet as in Fig. 11-1A. It is not as well known, however, that the same bar can also be magnetized as in Fig. 11-1B with a north pole at each end, and a south pole at

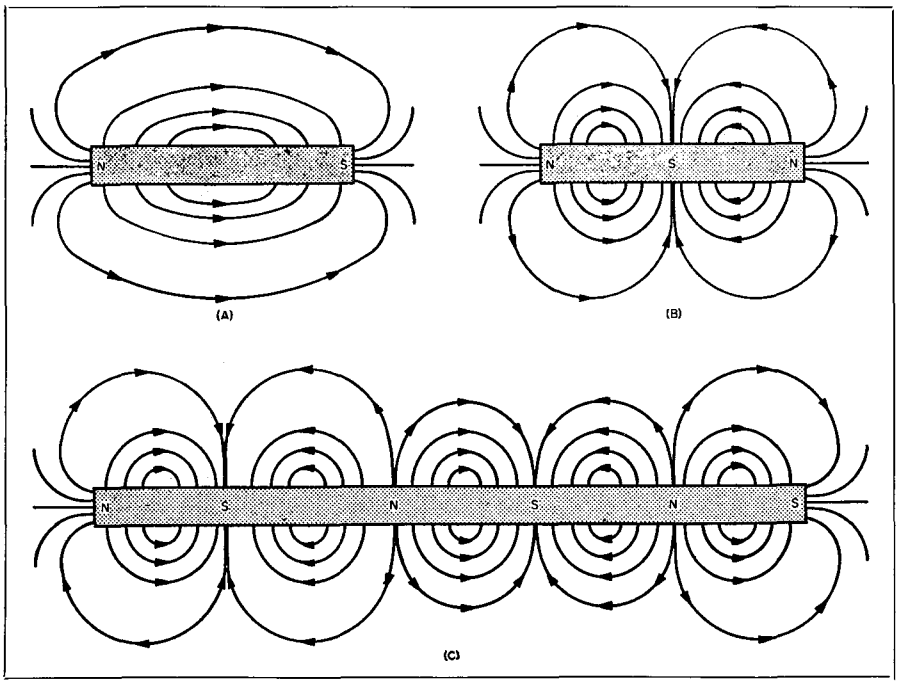

Fig. 11-1. Methods of magnetizing steel bars. (A) Dipole magnetized; (B) tripole magnetized; and (C) multipole magnetized steel bar.

the center. This idea is carried still further in Fig. 11-1C which illustrates magnetic poles unequally spaced, and of different strength. It can be shown that within limitations, to be described later, it is possible to form a magnetic pattern corresponding to any desired wave shape.

Suppose that a magnetized bar, such as shown in Fig. 11-2A, were to be pulled at uniform speed through a rather closely fitting coil, in accordance with Faraday's Law of Electromagnetic Induction, there would be an emf across the coil which is:

$E = Nd\phi/dt$ abvolts

where:

E is the induced emf.

N is the no. of turns in the coil.

$d\phi/dt$ is the time rate of change of flux.

The output voltage wave is illustrated in Fig. 11-2B. It will be noted that the peak voltage occurs when the coil is at point A,C, and E where the flux change is most rapid. At points B and D, where the flux change is nil, the voltage is zero.

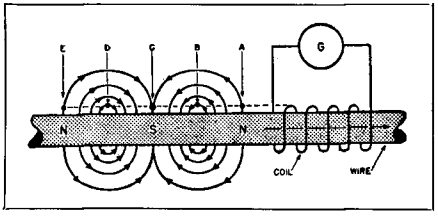

Fig. 11-2A. How variations of magnetic field intensity are converted to an ac voltage.

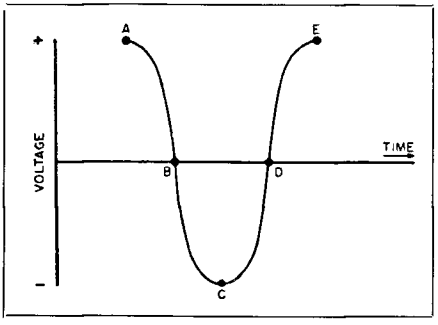

Fig. 11-2B. Waveform (output voltage) on recording head when wire is magnetized as in Fig. 11-2A. Peak voltage occurs when coil is at points A, C, and E. At B and D where there is no flux change, voltage is zero.

The principles just outlined were first used by Valdemar Poulsen about forty-five years ago. To magnetize a steel wire longitudinally, he used a pair of electromagnets arranged as in Fig. 11-3A. While this system worked fairly well, the magnets affected a rather long section of the wire, and necessitated a high wire speed. This may be clarified by the following practical example:

Suppose that it were desired to record a 5000 cycle wave ($f = 5000$) on the wire, and the pole pieces were spaced 1/16 inch ($\lambda = 1/16$). Then the speed corresponding to wavelength of this size would be:

$V = f\lambda = 5000 \times 1/16 = 312$ in. per sec.

For good waveform the speed might have to be several times this figure.

Obviously, the mechanical problems of handling wire at such high speed were serious. Poulsen's device was bulky and noisy. The wire broke frequently, and pole-pieces wore so rapidly that they had to be renewed like phonograph needles.

Later experiments tried various methods of decreasing the pole-piece spacing. When the pole-pieces are opposite one another, the limit of decreasing pole-piece spacing is reached, as shown in Fig. 11-3B. This system is unsuited for use with round wire, because the wire might rotate about its axis between the time a record was made and the time it was played, thus causing objectionable variations in amplitude.

In an attempt to correct the difficulties previously encountered in magnetic recording, experiments at the *Armour Research Foundation* were directed toward a new type of recording head illustrated in Fig. 11-4. With this new unit, the recording was done in a small air gap, instead of by the use of sharpened pole-pieces. This air gap was made as short as 0.001 inch, so that only a very small portion of the wire was affected at one time.

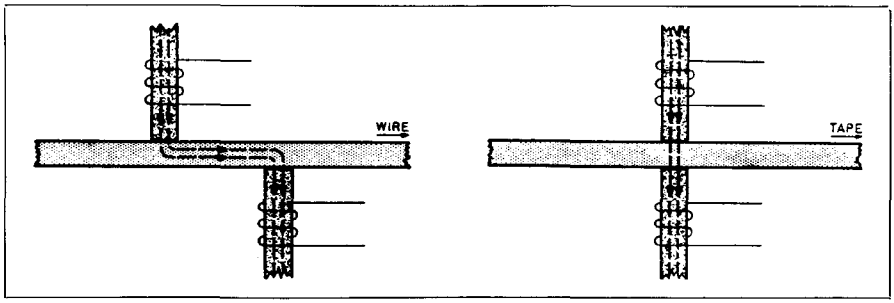

Fig. 11-3. (A) Longitudinol magnetization of wire using two pole pieces. (B) Perpendicular magnetization of tape using two pole pieces.

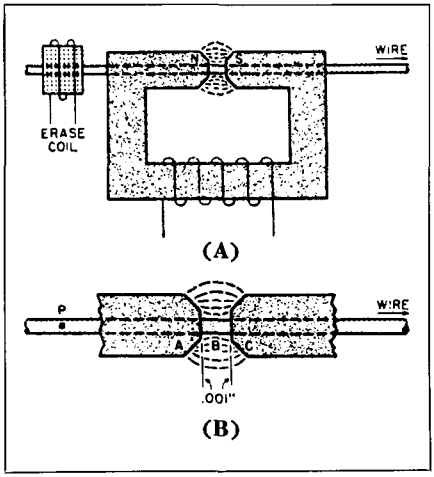

Fig. 11-4. (A) Cross-sectional view of magnetic wire recording head. (B) Drawing illustrates details of the recorder pole pieces.

Point P on the wire is moving in the direction indicated in Fig. 11-4B. When this point is at A, in the interior of the pole-piece, the magnetizing force acting on it is practically zero. As soon as it passes into the air gap B, it is magnetized by a concentrated field set up by the coil. As the wire continues moving, point P passes into the field-free interior of the second pole-piece C. The ratio of the magnetizing force in the gap to that in the poles, may be estimated from the equation:

$$H = \frac{B}{\mu}$$

where:

H is the magnetizing force.
B is the flux density.
μ is the permeability.

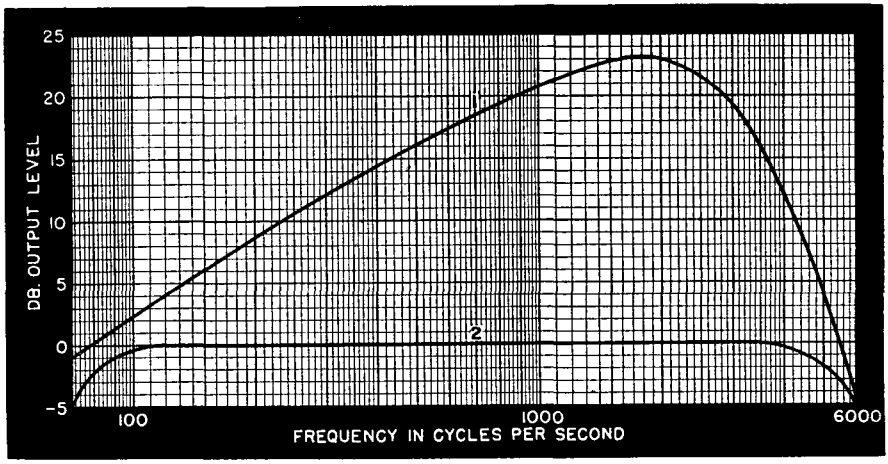

Fig. 11-5. Frequency response curves for wire recorder. Curve 1 shows output level minus corrective network. Curve 2 shows output with corrective network.

Assuming that the flux density B is constant throughout the magnetic circuit, then the magnetizing force varies inversely as the permeability. Since the permeability of the pole-pieces is about 1000 times as great as that of the gap, the magnetizing force inside is only 1/1000 that of the gap.

The magnet illustrated in Fig. 11-4A is used also for pickup of the recording from a magnetized wire. Analysis shows that the voltage picked up from the wire can be given by the expression:

$$E = B_m V \sin \frac{\pi W}{\lambda}$$

where:

E is the relative induced voltage.

B_m is the maximum flux density in the wire.

V is the velocity of wire travel.

W is the width of air gap.

λ is the recorded wavelength.

The frequency response curve calculated from this formula is plotted as curve No. 1 in Fig. 11-5. Fixed values of B_m, V and W, have been chosen in this case. It will be noted that at frequencies low enough so that $\sin \pi W/\lambda$ is practically the same as $\pi W/\lambda$, the output voltage decreases at the same rate as the frequency. This limits the low frequency response.

High frequency response is limited by length of the recording gap, and also by the demagnetizing effect of adjacent magnetic poles at short wavelengths. The frequency characteristic can be made fairly flat by the use of a corrective network, as shown in curve No. 2 in Fig. 11-5.[1]

Generally speaking, magnetic recording machines are not particularly complicated. A magnetic material, such as wire or tape, is drawn past a recording head. As it passes through the head, the material becomes and remains magnetized. The amount of magnetization remaining in the material at each instant is governed by the impressed signal upon the recording head. In playing back, the magnetized material is drawn past a playback head. The varying magnetization which remains in the material induces corresponding voltages in the coil of the playback head. In modern practice the recording and playback heads are incorporated into a single unit.

The erasing of a signal from a magnetic material is accomplished by means of an erase head. This head impresses

[1]Camras, Marvin, Armour Research Foundation, "A New Magnetic Wire Recorder" Radio-Electronic Engineering Edition of Radio News, November. 1943.

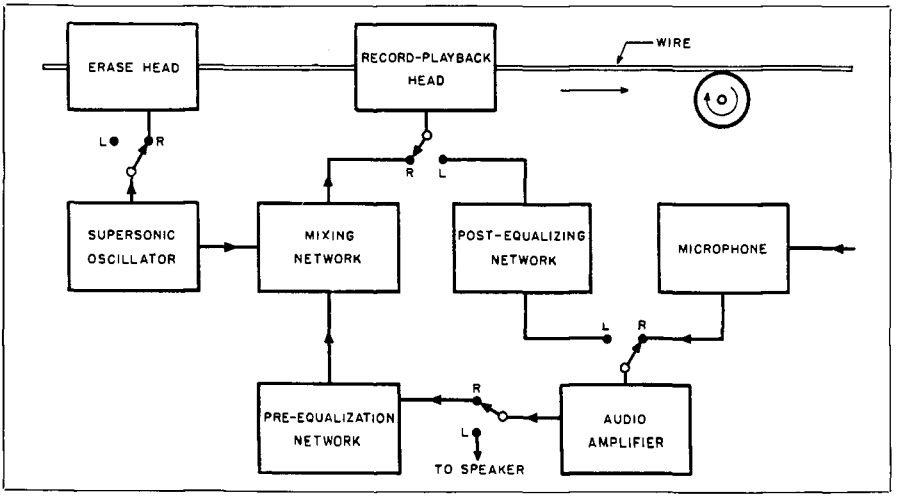

Fig. 11-6. Simplified block diagram of a typical wire recorder.

a field upon the material, which, erasing the old signal, makes the material ready to receive another signal or to be re-recorded. Basic components of magnetic recorders include a reproduce head, and erase head. In addition are the other component parts such as the drive mechanism, the spools or containers for the wire or tape, a compensated record and playback amplifier, conventional microphone, speaker, and special filter systems to overcome the nonlinearity of the magnetization curve of the recorded material.

It was discovered, following initial experiments with wire recording, that the application of an ultrasonic signal to the recording head was necessary to provide a bias to overcome the nonlinearity of the normal magnetization curve of a magnetic material.

Fig. 11-6 is a block diagram of a typical magnetic recorder. It will be noted that in the "record" position, the ultrasonic oscillator serves double duty by providing high frequency for both the demagnetizing head and the recording head. First the magnetic material passes through the erase head. The material is demagnetized and is ready to receive a signal from the recording head. The application of an ultrasonic signal to the recording head provides a bias, as mentioned previously, and helps to overcome the nonlinearity of the normal magnetization curve of the magnetic material.

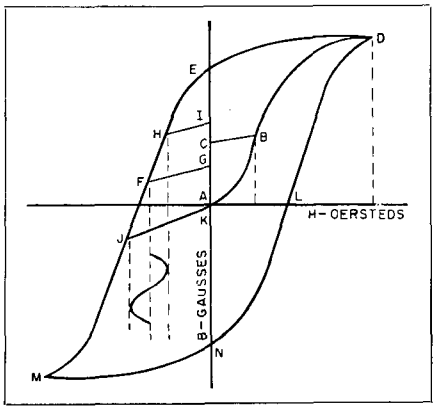

Fig. 11-7. Typical magnetic material magnetization characteristics.

Magnetic Materials

We will avoid the term wire recorder wherever possible inasmuch as magnetic recording techniques apply equally to other materials such as plastic tape and paper discs to which have been added a coating of magnetic material. In addition, certain alloys have been found which give excellent results in magnetic recording.

Recording Bias

Either dc or ac bias will improve the linearity of the magnetic material magnetization curve, as previously mentioned. The following will explore the advantages and disadvantages of each.

Referring to Fig. 11-7 we see the magnetization characteristics of a typical magnetic material. Beginning at point A, with the material demagnetized, the magnetizing force (H) is increased to point B and then reduced to zero. The material, however, has become permanently magnetized and the flux density (B) does not return to zero but instead only drops to a value of C.

If the magnetizing force had been increased to point D and then reduced to zero, the residual flux density would now correspond to E. Note that (B) the residual flux density is not proportional to (H), the field intensity. This is a

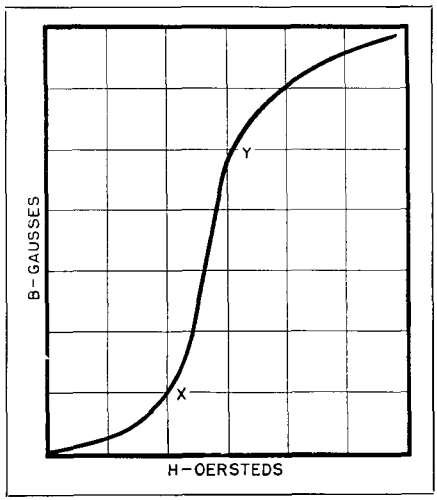

Fig. 11-8. Residual flux density curve.

source of nonlinearity better illustrated in Fig. 11-8 where the residual flux density is plotted against original magnetizing force. From the origin to point X the characteristic is very nonlinear. Between points X and Y the linearity is excellent while after Y it again becomes nonlinear. Obviously, for good reproduction some biasing is necessary to enable operation on the linear section between X and Y. Two systems—one using dc and the other an ultrasonic bias, have been developed and are widely used.

The dc bias employs a saturation erase. The material in passing the erasing head is magnetized to point D (Fig. 11-7) and therefore will return to a residual flux density of E. (D-E-M-N is the hysteresis loop of the material.)

In order to operate on the linear portion of the loop to the left of E a fixed negative field, F, is applied to the material by the recording head. When the material leaves the recording head, the flux density decreases along a nearly straight line to G. Suppose a signal superimposed upon the fixed negative bias varied the field intensity between H and J. If the material leaves the influence of the recording head polepieces when the field intensity is J, the flux density would proceed along the practically straight line to K. From H it would have gone to I. Within a limited range in the neighborhood of F the lines H-I, F-G, and J-K will be almost straight and parallel. This means that the induced reproducing voltages will be linearly related to the recording fields.

Of great importance is the magnitude of the fixed negative bias employed. If this bias is too small, the signal will be distorted by the nonlinear section near E. Too large a bias will cause signal distortion by carrying over into the section near M. There is a limit to the magnitude of the recording audio field, for the curve is linear only in a limited region around F. In addition, too large a field will produce distortion. We have ignored the self-demagnetization effects of thin sections of material such as are used in magnetic recording. Demagnetization will tend to further reduce the amplitude of linear recording when dc bias is employed.

Ultrasonic Biasing

To overcome the nonlinearity of the magnetization curve, ultrasonic biasing was developed. It possesses several advantages over dc bias. Ultrasonic bias-

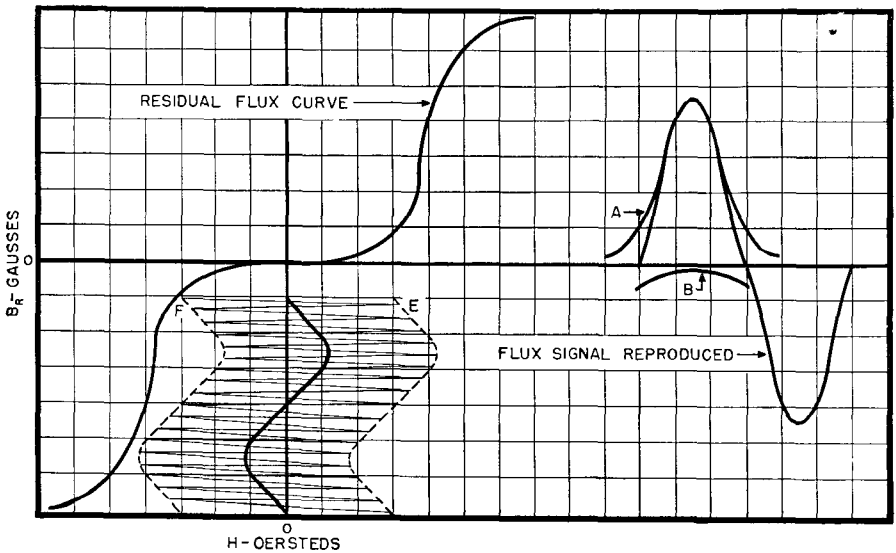

Fig. 11-9. Ultrasonic biasing effect. Combined audio and ultrasonic magnetizing field is applied to residual flux density curve to plot the flux signal that the wire will produce in the gap.

ing, as its name implies makes use of an ultrasonic signal (40 kc is commonly used) as a bias upon which the audio signal is superimposed. Normally the ultrasonic oscillator is also used for the erasing head, so that the magnetic material enters the recording head completely demagnetized.

Fig. 11-9 illustrates the action of ultrasonic biasing. Here a field which is a mixture of the ultrasonic bias and an audio signal is shown applied to the residual flux density curve. Let us first consider the magnetizing action of a typical wire record-reproduce head as illustrated in Fig. 11-10A. The demagnetized wire entering the head from the left will be shielded from the magnetic field until it enters the recording gap between the two pole pieces.

During the time in which it travels from the first pole to the shielding of the second pole, the element of wire will be subjected to the varying magnetic fields existing in the gap. In this time interval the audio signal intensity will have changed only a small increment. However, the ultrasonic bias will have gone through 1½ or 2 cycles. The residual flux density that is left in an element of wire will depend upon the field intensity existing in the gap at the instant that the element left the gap and entered the second pole. Referring again to Fig. 11-9, this means that if one element of wire had a residual flux density corresponding to a field of point *E*, the residual flux of the following segment would correspond to point *F*.

But what effect does this have upon reproduction? We find that the gap is long enough to contain several negative and positive peaks of the ultrasonic bias. The total flux in the gap will then depend upon the sum of the gap fluxes. In Fig. 11-9 the projection of the positive peaks on the residual flux curve at each instant of the audio signal produces curve *A*. The projection of the negative peaks forms curve *B*. The addition of *A* and *B* results in a curve that represents the effective flux that the wire will reproduce in the gap. Although some distortion is present in the resultant curve, it is a great improvement over reproduction without bias. As in dc biasing, the linearity of the response using ultrasonic biasing is dependent upon the amount of bias used. The response shown in Fig. 11-9 probably could be improved upon with a more careful choice of bias.

The first magnetic recording wire was processed from medium carbon steel rod, which material proved to be unsatisfactory for useful application

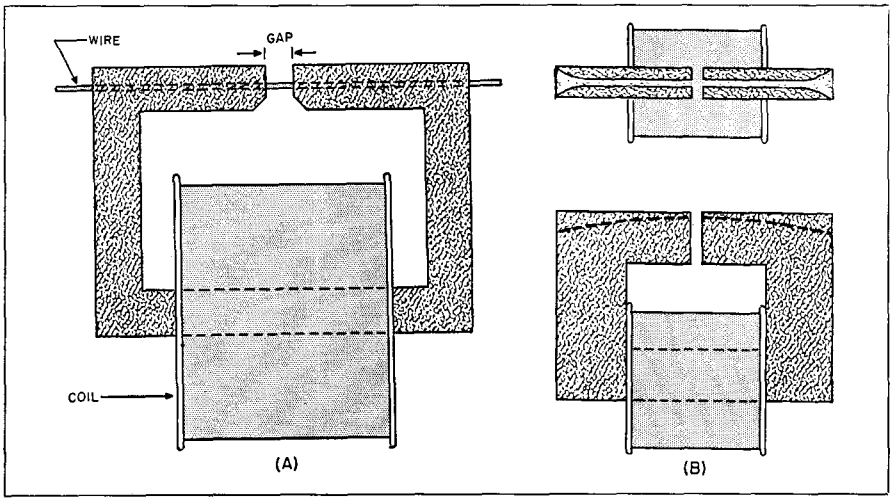

Fig. 11-10. (A) Typical wire record-reproduce head. (B) Open type wire record-reproduce head.

PROPERTIES OF MAGNETIC WIRE FOR RECORDING

The question is sometimes posed—"What is the difference between Stainless Steel Recording Wire and Regular Stainless Steel Wire of the same diameter size?" The following comparative outline prepared by *Fidelitone* is set forth for ready reference in reply to that question.

Stainless Steel Recording Wire	*Regular Stainless Steel Wire*
1. It is a special wire produced for sound recording only.	1. It is not a special wire and is produced for usual commercial wire applications.
2. It is drawn from selected stainless quality alloy rods, free from physical imperfections and certain chemical impurities.	2. It is drawn from stainless steel rod that is "mine run" and has all inherent properties.
3. Magnetic and electrical characteristics are positively controlled.	3. Magnetic and electrical characteristics are not controlled.
4. It is manufactured for ultimate use by non-professionals — those using wire recorders in homes, schools, offices, etc.	4. It is produced for use by professional craftsmen manufacuring coils, springs, watches, metal cloth, etc.
5. Constant, repetitive tests during processing are required to insure correct recording, playing, erasing performance.	5. Testing is limited to checks on tensile strength, physical and chemical characteristics.
6. The finished wire must undergo thorough cleaning to insure removal of all lubricants, coatings, foreign matter, etc.	6. The finished wire need not be cleaned after processing. Some applications require lubricants remaining on the wire.

of the art. Medium carbon steel was subject to rust and corrosion and the frequency response was not satisfactory when used at practical speeds. Non-corrosive, stainless steel was adopted to replace the medium carbon steel—with the result that a high quality, free-from-rust, magnetic recording wire is now available for use at any required, useful speed.

Much "trial and error" effort, along with the engineering, was expended in learning the "know-how" of manufacturing a high quality stainless steel recording wire at low cost.

1. A first essential consideration is the correct selection of the steel ingot from which the rod is produced. The alloy must be free of certain impurities and possess certain physical and chemical properties. The heat treating must be accomplished within specified limitations. There is a high percentage of rejection of stainless steel rod that is normally usable in regular stainless steel wire processing practices.

2. The recording wire must not be hard and must be free of cold work after annealing. Repetitive annealing must be made to make the wire ductile —yet tough enough to withstand usage of the same in wire recorders by the public.

3. The magnetic qualities of the wire must be closely controlled—a new technique in wire processing. Special instruments and testing techniques were developed by engineers of *National-Standard* to properly evaluate the wire, including a unique magnetic testing device to quickly and accurately determine the H_c and B_r of the wire.

4. The wire must be uniform magnetically—and in addition, must be uniform physically and chemically.

5. The wire must have a clean surface. This is a prime requirement. Recording wire that is dirty, i.e. contain-

ing foreign matter on the surface, when used in the wire recorder, will deposit such matter in the recording head and thereby seriously impair the recording and playing performance of the recorder and the wire.

6. Magnetic noise of the recording wire is a new factor in wire processing and must be closely controlled. Modulation and erased noise are other new factors requiring the closest control.

Distortion

Regular intermodulation measurements can be made to check distortion and, accordingly, to check the bias for best results. A low frequency sine wave of fairly large amplitude is simultaneously recorded on the magnetic material with a high frequency sine wave of low amplitude. If the system were perfectly linear, the output of the reproducing head would show no modulation of the high frequency signal by the lower. As the system is not perfectly linear, some modulation will occur. The bias can be adjusted to make this a minimum.

Two advantages can be attributed to ultrasonic biasing as compared to dc biasing. These are, less noise and a greater linear amplitude range allowing higher level recording. Experimenters have been led to the conclusion that noise in magnetic recording is largely caused by the passage between pole pieces of many randomly distributed magnetic irregularities which are less than .0015 inch in diameter. Magnetically saturated material was found to be ten to twenty decibels noisier than demagnetized material. This means that dc biasing, with its saturation erase and fixed magnetic bias, will be noisier than ultrasonic biasing which uses a demagnetizing erase.

Magnetic Head Design

Practical experience has shown the desirability of combining the recording and reproducing functions into a single head. At the same time, while the overall response characteristics are influenced to some extent by the recording head design, they are much more dependent upon the design of the playback head. Therefore, the playback requirements usually govern the design of the head.

The open type head, commonly employed where a magnetic material is in the form of wire, is shown in Fig. 11-10B. Note that the wire is drawn through a tapered slot. This is done for ease in placing the wire in the head while the taper will alow a splice or knot to be made in the wire and yet permit the wire to ride up out of the slot and prevent a jam. Fig. 11-11C shows a closed type head which is similar to the open type except that the coil surrounds both the wire and the pole pieces. The closed type reduces the effect of stray fields and produces a response curve that is a little more regular than that of the open type.

The heads illustrated in Figs. 11-11C and 11-10B may be made of several laminations if a high impedance head is desired, or of a single lamination if a low impedance head is preferred. In either case, the lamination should be kept as thin as practical to reduce eddy current losses and to improve the high frequency response.

Heads for record-playback should be made of a material that offers high permeability at low flux density. Mu metal or molybdenum *Permalloy* are commonly used. Magnetic coupling between the magnetic recording material and the head should be excellent. The gap between pole pieces is normally filled with a nonmagnetic material such as solder or soft copper but these materials wear excessively. Better results can be achieved and a more permanent head secured by employing beryllium copper.

The gap in commercial heads is usually somewhere between .001 inch and .002 inch depending upon the wire speed and the desired frequency response. Inasmuch as frequency range is largely dependent upon the length of gap, the matter of spacing becomes extremely important, as will be discussed later.

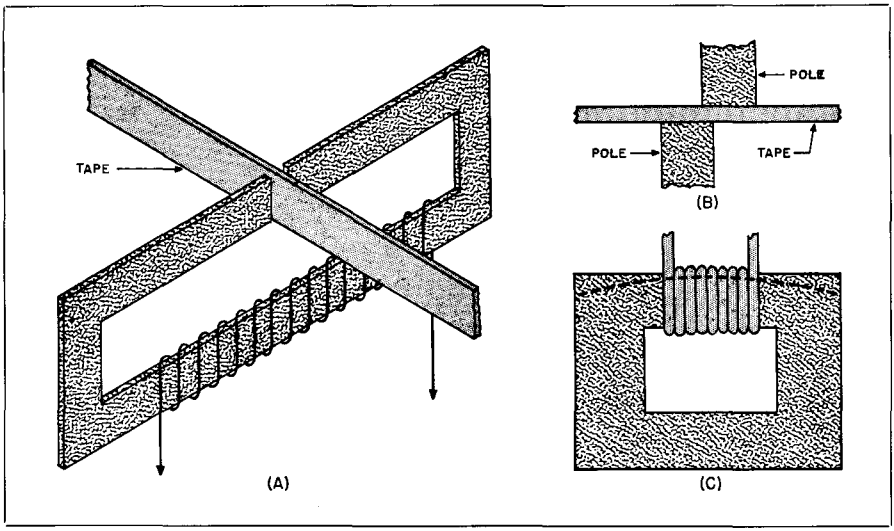

Fig. 11-11. (A) Record-reproduce head for transverse recording on tape. (B) Offset thick pole pieces used to improve characteristics of head shown in (A). (C) The closed type record-reproduce wire head used in some types of magnetic recorders.

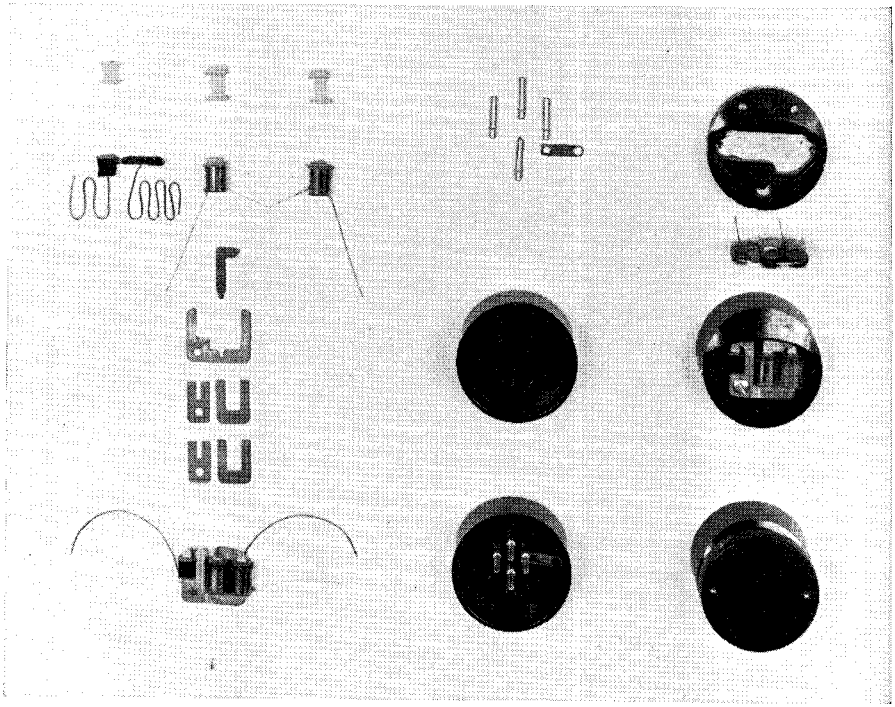

Fig. 11-12. Exploded view of combination head. Parts shown include: (A) Winding bobbins; (B) Wound bobbins; (C) Laminations; (D) Completed head assembly; (E) Contact pins and ground strap; (F) Lower half of case; (G) Lower half of case with pins; (H) Upper portion of head and shield plate; (J) Head assembly ready to install; (K) Head assembly installed in lower half of case; and (L) The completely assembled head. (Courtesy, Radio & Television News)

The major difference between a recording-reproducing head and the erasing head is in the length of the gap. Usually an erasing head gap will be about .010 inch. An exploded view of a *Webster Chicago* head is shown in Fig. 11-12.

Considerations for Magnetic Tape Recording

Considerable advancement has been made in magnetic recorders which employ a magnetized material in the form of a tape. As tape will run flat and will not twist when unwinding, it can be magnetized either longitudinally or transversely. A simplified diagram of a head for transverse recording on magnetic tape is illustrated in Fig. 11-11A. It will be noted that pole pieces are thin, single laminations. Increasing the thickness of the laminations will have the same limiting effect on frequency as increasing the gap on the head of Fig. 11-10A. Improved and increased response, combined with a sturdier construction is obtained by using thicker offset pole pieces (Fig. 11-11B). This head derives increased gain from the decrease in reluctance that wider pole pieces effect in the region of low permeability that exists at the end of each pole.

Frequency Response

As mentioned previously, the length of the air gap becomes a most important factor in setting the general frequency response of the system. The over-all frequency response of a magnetic recorder is also dependent upon such factors as head design, wire or tape speed, magnetic recording material, and amplifier compensation. Some of the frequency limiting factors in the recording-reproducing head have already been discussed.

If a wire containing two alternating magnetic fields, both of the same magnitude, but one twice the frequency of the other, is passed through a reproducing head, the higher frequency will induce an emf that is twice that induced by the lower frequency. This is, of course, caused by the fact that induced voltage is directly proportional to both the flux density and frequency. As might be expected, a constant rise in output is had with frequency but this is true only at the lower frequencies. At higher frequencies the response begins to drop (as the frequency recorded on the medium approaches the length of the gap). Fig. 11-13 illustrates the effect of gap length on frequency response while Fig. 11-14 gives the effect of wire speed.

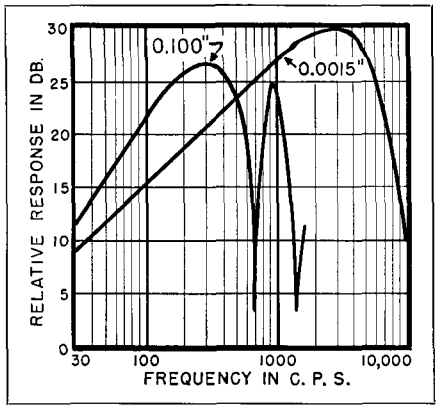

Fig. 11-13. Frequency vs. response curves show result when gap length is changed.

The speed of the magnetic material has little effect upon the low frequencies but it does have a considerable effect upon the high frequency response. Commercial recorders operate at speeds

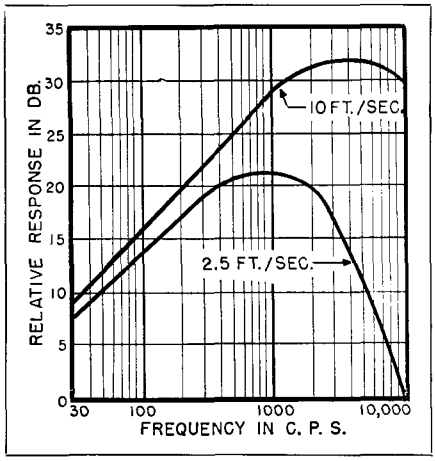

Fig. 11-14. Illustrating the influence of wire speed on frequency response.

ranging from 7.5 inches per second up to 6 feet per second with 7½″ per second giving excellent results on some of the latest models. The current through the recording head coil determines the residual flux density which will be left in the magnetic material. A recording head is largely inductive and its impedance increases with frequency. It is necessary to use an amplifier with a rising characteristic to make the recording head current independent of insert a large resistance in series with the coil. Constant recording current was the frequency of the input signal or to used for the curves of Figs. 11-13 and 11-14. Referring to Fig. 11-13 it may be seen at a glance that some sort of equalization is required in order to achieve an over-all flat frequency response within the desired range.

Pre-equalization, post-equalization, or a combination of both are commonly used in magnetic recording. As the linear section of the magnetic material's magnetization curve does not extend indefinitely, only a limited amount of pre-equalization can be used before overloading. This is particularly true when using pre-equalization and is not desirable for the higher frequencies, as most of the noise lies in this region. Higher frequency response can be obtained by using pre-equalization but overloading necessitates reducing the recording level and lowering the signal-to-noise ratio as the range is extended. Inasmuch as the low frequency response is normally lower than that of the middle frequencies, some sort of equalization is required. Overloading precludes the supplying of all the required equalization with pre-equalization alone. Therefore, a combination of pre-equalization and post-equalization will be found to be most satisfactory.

Materials for Magnetic Recording

Many varieties and shapes of magnetic materials are now being employed for magnetic recording. Noise level, frequency response, and signal amplitude will be affected by the type of magnetic material used. At the lower frequencies, with a fixed speed, the retentivity (measure of residual flux density) will determine the magnitude of output voltage from the reproducing head. However, we find that the shorter magnetic poles of the higher frequencies in the cross section of the magnetic material produce a strong self-demagnetizing effect which tends to reduce the induced higher frequency output voltage.

The effectiveness of this demagnetization depends upon the coercive force of the material. Coercive force is defined as the magnetizing force required to reduce the residual flux density to zero after saturation. If the residual flux were N, Fig. 11-7, the coercive force would be AL. Materials having a high coercive force will experience less self-demagnetization. Since high coercive force materials have a low retentivity, it means that some low frequency output voltage must be sacrificed in order to extend the upper frequency range.

High coercive force and low retentivity offer the additional advantage of reducing noise from crosstalk induced into the material by an adjacent turn of material when wound upon the spool.

Improved magnetic tape, having only part of its density occupied by the magnetic coating, does offer a certain amount of insulation and crosstalk is not encountered when turns are wound over one another on the reels.

When Vicalloy tape (developed by *Bell Telephone Laboratories*) with a coercive force of 250 oersteds is used, the quality of vertically cut vinylite can be readily equalled. An equalized response from 100 to 8000 cycles, with a useful volume range of more than 50 decibels, has been obtained from Vicalloy tape using the recording-reproducing head illustrated in Fig. 11-11B. The tape speed in this case was only 16 inches per second. Research on magnetic tape recording has also been done by the *Minnesota Mining and Mfg. Co.* (Metallic wire and tape are the most common magnetic material shapes used in magnetic recording.) A German machine, on the other hand, was found that records upon magnetically coated

plastic tape, producing forty-five minutes of recording from one-half mile of tape and now in common domestic use.

Considerable research has been done in the United States by the *Brush Development Company* on magnetic recording materials. Both a magnetically coated paper tape and a magnetically coated paper disc have been used successfully. Here the recording medium is a suspension of finely divided magnetic particles in a coating applied to paper. Paper tape is very easy to handle and cheaper than most other magnetic materials. It lends itself readily to editing, for a section of the paper tape may be cut out with a scissors and the ends joined with glue or adhesive.

Plated brass wire has also been found to be well suited to magnetic recording. A frequency response of 80 to 8000 cps (down 6 db. at 10,000) with a signal-to-noise ratio of 35 db., can be obtained. The wire is .0046 inch in diameter and is plated with a magnetic material. Wire speed is 24 inches per second and the minimum recording time is four hours for a unit which has been developed.

Wire vs. Tape

MAGNETIC RECORDING WIRE **MAGNETIC RECORDING TAPE**

(A Comparison)

I Physical Characteristics

Magnetic recording wire consists of stainless steel alloy drawn to a diameter of .004″ or .0036″ to meet present industry standards, specifications and requirements. It can be drawn to larger or smaller diameters if required.

Magnetic recording tape (coated) consists of a special magnetic powder which is affixed to a paper or plastic base with a binder. Tape width in common use today is approximately ¼ of an inch.

II Processing

Stainless steel magnetic recording wire processing requires a high degree of engineering control with especial emphasis placed on the proper cold drawing and heat treating practices which determine the magnetic properties. Also of great importance is the physical texture of the material and its confinement to specified dimensional tolerances.

The magnetic properties of magnetic recording tape are dependent upon the formula used by the manufacturers. The recording tapes on the market today are different, one from the other, magnetically. Most magnetic powder material is combined with a suitable binder that will permit facilitated application with consequent adhesion to the base material.

III Signal-to-Noise Ratio

Noise and consequent signal-to-noise ratio is dependent upon the molecular structure of the wire, smoothness of wire surface and confinement to exact dimensional tolerance random effects.

Inasmuch as magnetic tape offers a considerably greater dimensional width than does wire (a cross-sectional diameter) it is possible to make use of wider recording track when the tape medium is employed. The resulting voltage to the recording head increases as the track width is broadened, resulting in an improved signal-to-noise ratio. The actual improvement, however, is con-

tingent upon the chosen track width. Noise is mainly attributed to variation in the particle size of the magnetic powder (more residual magnetism due to particle size), abrasive characteristics of the tape coating, non-uniform dispersion of powder in the binder and the degree of stiffness of the base material.

IV Recording and Playback Speed

The standard recording and playback speed is 24 inches per second.

Recording and playback speeds of 7½, 15 and 30 inches per second have recently been adopted.

V Frequency Response

Utilizing the best possible laboratory constructed recording heads, the relative high frequency response of tape at 7½ inches per second is not quite as great as is the response from wire at 24 inches per second. This may be compensated by slightly increasing the tape speed. At greater speeds, tape is superior.

VI Erase

Most magnetic stainless steel recording wire presently on the market may be readily erased (demagnetized) by utilizing heads and electronic circuits in present day wire records. There are, however, some wires on the market, because of their magnetic properties, that require the application of dc or permanent magnet fields in order to obtain satisfactory erasure.

While most magnetic tape now on the market may be easily erased (demagnetized) on all commercial equipment on the market today, some recording tapes require dc or permanent magnet use to obtain satisfactory demagnetization. Erase heads and circuits must be designed so as to effectively erase recordings without over-heating the plastic materials in the binder, or the base itself, if it is plastic.

VII Life Expectancy

There is practically no limit to the life of stainless steel recording wire. Experimentally, a recording on wire has been played hundreds of thousands of times without noticeable deterioration or the introduction of distortion components.

Paper-based magnetic recording tape does become worn after 10,000 to 12,000 plays. Plastic-based tape has an extended durability of life. However, the ultimate figure is dependent upon operating conditions and design of the tape transport mechanism. The life of magnetic tape is much more dependent upon the nature of the base material than upon the coating.

VIII Editing

Wire recordings may be edited by listening and cutting out (or erasing by demagnetization) undesired portions of the recording. After cutting out an undesired length of wire, the two loose ends may be joined in a common square

Undesired portions of tape recordings may be cut out and then spliced with the use of *Scotch* Tape. Tape thus spliced will pass the head without objectionable interference with the recording. Undesired parts of a recording

knot. The knotted wire will pass through the head without objectionable interference with the edited recording.

may also be erased by demagnetization. Paper-based recording tape may have comments written on the uncoated side for editing purposes.

IX Storage

A one hour recording may be placed on a standard wire spool which is approximately 2¾ inches in diameter. The small storage space on the spool required for the small diameter wire lends itself readily to the cartridge or magazine loading method of handling the wire.

A 7 inch 8 mm. motion picture reel will hold enough paper-based recording tape for approximately ½ hour of recording time at 7½ inches per second and 1 hour at 3¾ inches per second. This, however, may be doubled when dual direction (double channel) recording is employed.

X Atmospheric Effects

Stainless steel recording wire is not vulnerable to variations in temperatures and humidities. The material will not rust, nor will it lose its magnetism until it has been subjected to a dull red heat.

Magnetic recording tape (coated or impregnated) in general is affected by high temperatures plus high humidities. Paper and plastic-based (including acetate and nitrate) recording tape may, of course, be destroyed through combustion when the combustion point for the base material and/or binder is exceeded. Plastic-based tapes have a tendency to become adhesive layer to layer (as well as to other materials) at high temperatures.

XI Winding

Recording on wire requires some means of level winding or some method of handling the wire so that it will be wound layer on layer in the recorder spool.

No level winding mechanism is necessary in magnetic tape recording. The flat tape lies layer upon layer in the reel.

XII Drive Technique

The small cross-sectional diameter of the recording wire permits spool-pulled applications which vary the wire speed. Exacting requirements, however, require the use of "capstan" wire drive; although this is not required for most home recording units.

Magnetic tape recording units require "capstan" driven mechanisms resulting in constant tape speed. Therefore parts of tapes may be combined with one another for continuous playing.

XIII Escape of the Media

If a portion of the supply of recording wire should escape from the spool, it is almost always more difficult to recover the same than if a similar occurrence should happen with tape.

XIV Cleaning the Heads

Wire and/or Tape Heads are easily cleaned by proper application of carbon-tetrachloride. Both wire and tape heads should be cleaned with some frequency to assure optimum results.

Characteristics and Performance Testing of Magnetic Tapes

Much progress has been made towards standardizing magnetic tapes and machines so that a recording made on any one of these machines may be reproduced on any other type of instrument. Interchangeability of recorded program material is mandatory if full use is to be made of the potentialities of magnetic recording. There are four principal criteria which determine the performance of sound recording equipment: (1) The signal-to-noise ratio, (2) the response vs. frequency, (3) the nonlinear distortions, and (4) flutter and wow. Optimum performance is only attainable by careful attention to all contributing factors, determined by test step-by-step analysis.

The following data, compiled by *Minnesota Mining & Manufacturing Co.*, illustrates the importance of good engineering theory and practice for obtaining quality performance from magnetic tape.

High Frequency Bias

Every magnetic medium is essentially a very nonlinear medium. The solid curve in Fig. 11-15 demonstrates this characteristic. The magnetization resulting from a given magnetizing field (such as produced by a recording signal) is not directly proportional to the original signal. This characteristic, if not corrected, would result in very bad distortion of the recorded material. The corrective means now almost universally used, is the use of what is called *high frequency "bias."* This is a high frequency (above the audible range, usually from 30 to 80 kc) current added to the audio current which is to be recorded. When this is done, the recorded audio magnetization may then be nearly linear to the audio signal as shown by the dotted curve of Fig. 11-15. By the use of this bias current the output for weak signals is very greatly increased, and the distortion of the recording for all but saturating signals is decreased to a very acceptable value. So far as distortion is concerned, the frequency of the bias current is not critical, but it should preferably be at least five times the frequency of the highest audio signal recorded. This is necessary to prevent the appearance of unwanted notes arising from beats between the bias frequency and harmonics of the audio frequency. The amount of bias current is chosen by tests of distortion at various frequencies and recording levels.

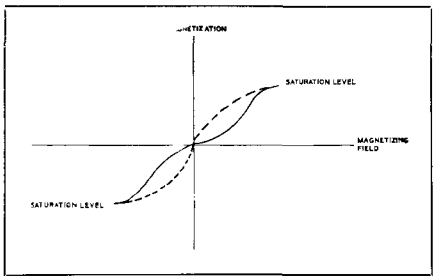

Fig. 11-15. Characteristic curve of a magnetic medium.

High Frequency Currents in Erasure

One outstanding feature of magnetic recording tape is that after having been recorded, the recording may be "erased" and the tape reused an unlimited number of times. This may be done by magnetizing the medium to saturation with a very strong field by a direct current or a strong permanent magnet. This is not a very satisfactory method because such a direct field, while it obliterates the previously recorded signal, leaves the tape strongly magnetized. This will cause a large amount of noise and considerable distortion in the next recording. A better system is to demagnetize the tape by the use of an alternating field which drives the medium to saturation alternately in both directions and then gradually reduces in the course of many alternations to zero. In order to achieve many alternations in a small gap length, and so that any residual fields will not cause an audible note, the frequency of the erasing current is usually from 30 to 80 kc. This erase current may be supplied by the same oscillator which supplies the bias cur-

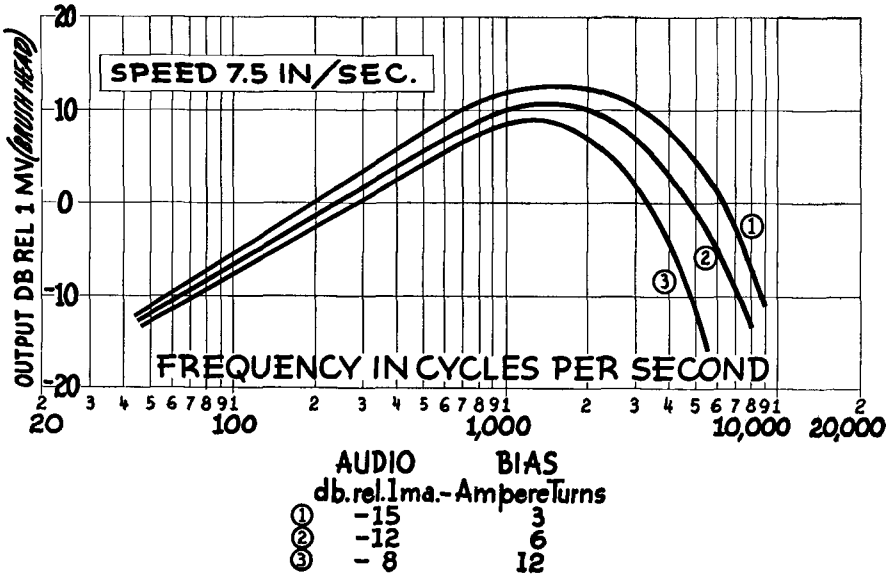

Fig 11-16. Effect of Bias on Frequency Response. "Scotch" Sound Recording Tape No. 100.

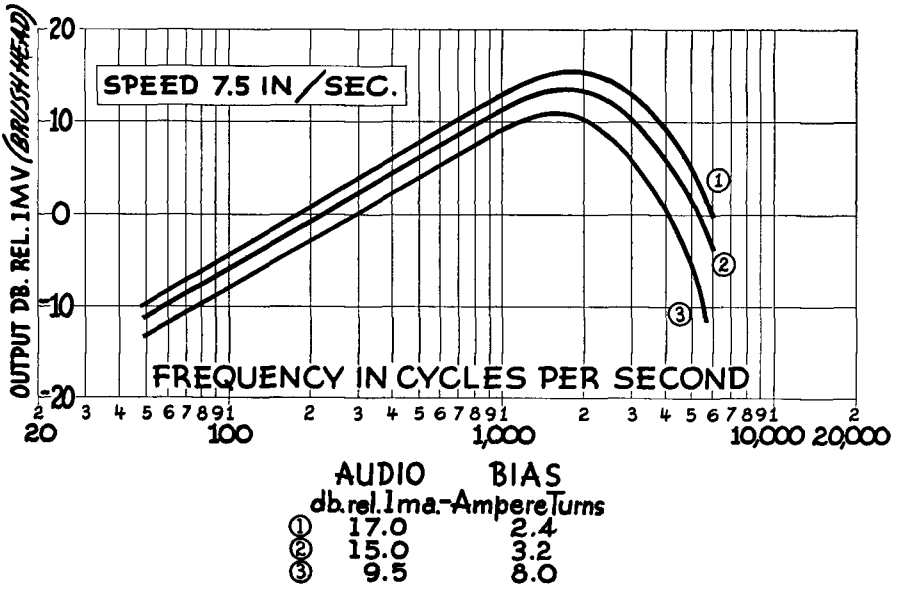

Fig. 11-17. Effect of Bias on Frequency Response. "Scotch" Sound Recording Tape No. 111.

rent. In order that erasure may achieve fairly complete demagnetization the head must be free of permanent magnetization, there should be no dc fields in the vicinity (as from magnetized steel parts, meter movements, etc.), and the waveform of the erase current must not be asymmetrical (no dc component and equal positive and negative peaks).

Explanation of Curve Graphs

The effect of the bias on frequency response is shown in Figs. 11-16 and 11-17. These curves were obtained with a constant audio recording current and with a bias frequency of 40 kilocycles per second. (The actual number of bias ampere turns is, of course, dependent upon the particular recording head used, but the effect of changes of bias will be substantially the same for various types of heads.) It may be seen that, in general, the higher the bias current used the poorer the high frequency response relative to the low frequency response. The bias is not normally chosen in order to adjust the frequency response, but rather the primary function of the bias current is to minimize distortion. For this purpose, the correct bias current is chosen by taking data similar to that shown in Figs. 11-20 and 11-21.

The effect of speed on frequency response is shown in Figs. 11-18 and 11-19. Nearly all of the factors affecting high frequency response are not frequency dependent but rather dependent upon the recorded wavelength; that is to say, twice as high a frequency may be recorded at twice the speed. The general way in which the response changes with speed is shown in Figs. 11-18 and 11-19 for a particular value of bias current.

In both Figs. 11-16 and 11-17 and in Figs. 11-18 and 11-19 it should be noted that the actual frequency response shown may not be that obtained in a different recording system. The frequency response is dependent upon several factors such as the head used, the recording gap, the reproducing gap, the tape characteristics, azimuthal orientation of the heads, etc. Thus, these curves should not be used as a basis for design but are rather an indication of the type of response which may be expected and the way this response will be affected by speed, bias, and type of tape.

Figs. 11-20 and 11-21 show distortion as the third harmonic distortion at a recorded frequency of 400 cycles per second and the value of the distortion as a function of the output level is indicated for several bias currents. These curves are distributed around the opti-

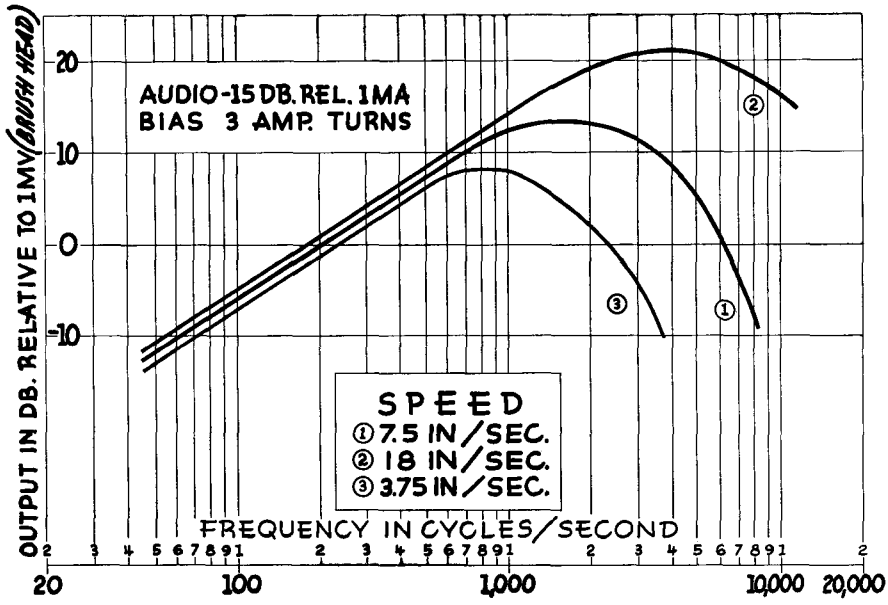

Fig. 11-18. Effect of Speed on Frequency Response. "Scotch" Sound Recording Tape No. 100.

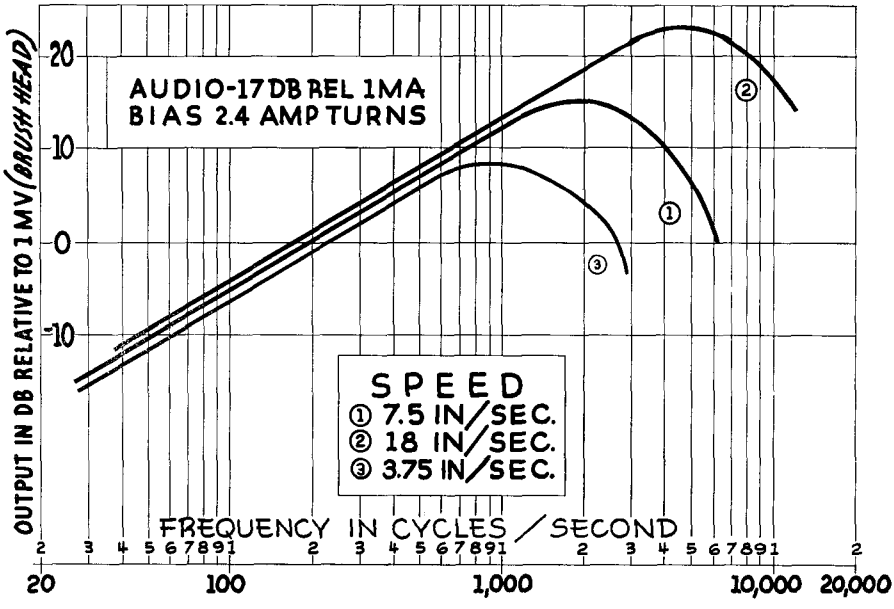

Fig. 11-19. Effect of Speed on Frequency Response. "*Scotch*" Sound Recording Tape No. 111.

mum value of bias current. The bias current for "*Scotch*" Sound Recording Tapes Types No. 100 and No. 111 is not particularly critical; substantially similar results are obtained for bias currents 50% above and below the optimum value. In the case of Type No. 112, however, the adjustment of the bias is far more critical with a slight decrease or a 50% increase from the optimum value causing a marked decrease in performance.

Even Order Harmonic Distortion in Magnetic Tape Recording

One of the attractive features of magnetic recording is that the media are inherently free of even harmonic distortion; the magnetization characteristic is not necessarily linear but is symmetric for opposite directions of magnetization. However, in practice, playback wave analysis of a sine wave recorded from a distortion free source will frequently show appreciable second and higher even order distortion. When this is found, it is indicative of some defect in the recording equipment. The purpose of this analysis is to point out what these flaws may be and how to determine and correct them.

A possible source of trouble is in the audio amplifiers, both record and playback. Distortion from this cause may be determined by conventional amplifier testing and eliminated by known techniques not peculiar to magnetic recording.

The causes of even harmonic distortion, which are in the recording process itself, all have one thing in common. This is a direct current component or magnetization which prevents the heads from modulating the tape about the point of symmetry, which is the state of demagnetization. The asymmetric influences may be most clearly visualized in their action at the record head, but if the erase head leaves the tape magnetized, the same results may occur. The troubles which lead to asymmetric recording are as follows:

1. Permanently Magnetized Heads.

Heads may become magnetized by accidental contact with magnets, by me-

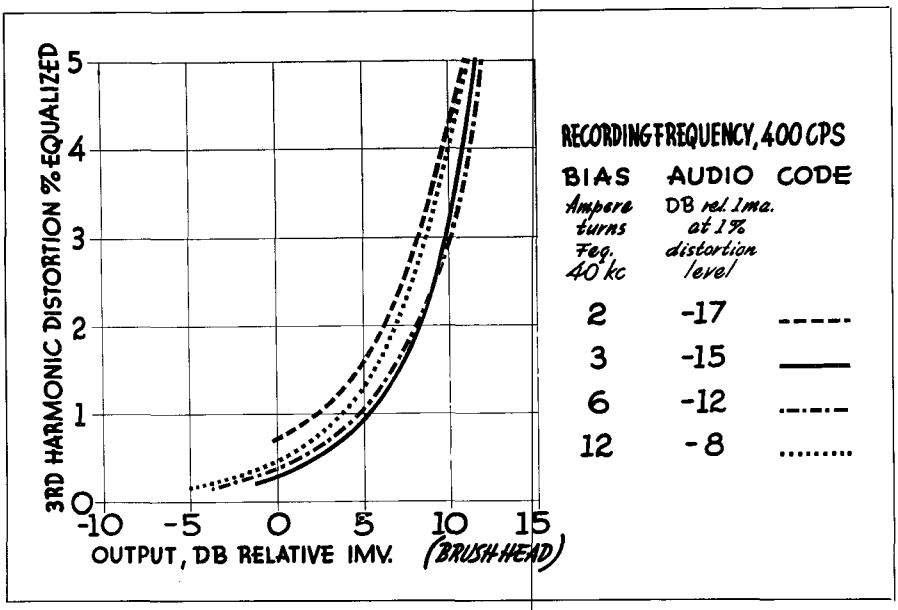

Fig. 11-20. Distortion as a Function of Output for Various Bias Currents. "Scotch" Sound Recording Tape No. 100.

chanical strains in a magnetic field, or, very commonly, by excessive transient currents occurring in the switching of recording, erasing, or biasing currents.

2. Direct Current Components In Erase or Bias Currents.

This is an obvious difficulty; some dubious circuit designs have allowed the dc of a tube's plate current to flow through the head, but if such undesirable design is avoided, dc can only result from a leaky capacitor or other faulty component.

3. Asymmetric Bias And/Or Erase Waveform.

Even if no dc component is present, a waveform with different positive and negative peak values will cause the same effect. This is caused by overload or inadequate design in the high frequency supply.

4. Stray External dc Fields.

These will produce the same effect as any of the sources of dc fields located in the head. Ordinarily the earth's magnetic field is negligible, but serious fields can be caused by magnetized steel parts or especially by nearby meters.

In testing for the existence of asymmetric fields, a small permanent magnet which may be held near the heads is a help. If some position of this magnet reduces even harmonic distortion, the polarity of the magnet should be noted and conditions changed. The heads may be demagnetized by gradual removal from a 60 cycle field of about 1000 oersteds. Bad waveform may be tested by reversing the leads to the heads; if such reconnection changes the amount of distortion or the polarity of the magnet held nearby to improve it, then the waveform is not good. Any steel parts should be demagnetized and any nearby meters temporarily moved to see whether there is an effect. Generally more than one influence is at work with their effects sometimes additive and sometimes subtractive, so it is important to separate the various causes; otherwise very wrong conclusions may be drawn.

It is also worth noting that these same factors which cause even harmonic distortion work to increase noise,

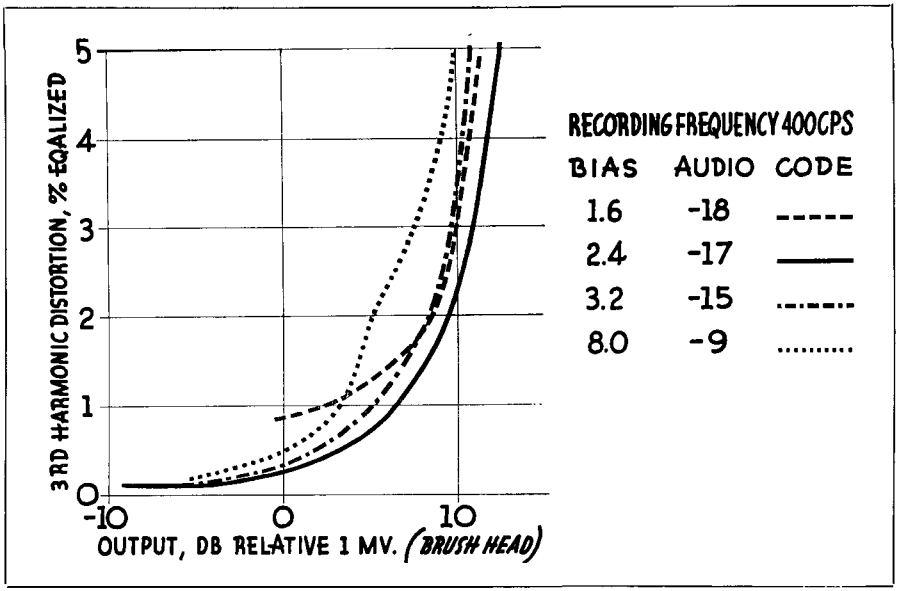

Fig. 11-21. Distortion as a Function of Output for Various Bias Currents. "Scotch" Sound Recording Tape No. 111.

and their removal will lower the noise as well as lessen the distortion.

Establishing AC Bias Values in Magnetic Recorders

Different magnetic tapes in general operate best at different values of the ac bias current. However, the optimum bias for use with *"Scotch"* Sound Recording Tapes No. 100 and No. 111 are the same. Too low a value of bias may result in high distortion and low signal-to-noise ratio. A bias current set at too high a value results in loss of response at high frequencies.

Except in machines designed for professional use, the bias setting is not particularly critical. In machines designed for home use an approximation of the optimum value of bias may be had through the use of an audio oscillator, a vacuum-tube voltmeter, and some means for measuring output of the playback system.

Connect the VTVM across the bias windings of the recording head where its reading will be proportional to the bias current. Record a 1 kc note at some level well below the overload point of the tape. Observe the output of the playback system as a function of bias current keeping the recording level fixed. For some value of the bias a maximum output will be observed. The following rules will help select the operating bias in terms of the bias current for maximum output:

(A) For Low Speed Machines Using DC Erase.

To obtain the best signal-to-noise ratio it is necessary to compromise by sacrificing high frequency response. The optimum bias current is approximately 50% greater than the bias for maximum output.

(B) For Low Speed Machines Using High Frequency Erase.

Because a good ac erase system results in a lower tape noise level than dc (or permanent magnet) erase, a lower value of bias may be used. Adjust the bias for maximum output of the 1000 cycle signal.

(C) For High Speed Professional Machines.

In general, more precise techniques for bias setting are required for professional machines. A reasonable compromise, however, is to choose a bias current twice that for maximum output of the 1000 cycle signal. See Chapter 12.

Magnetic Recording with DC Bias

It is of interest to examine briefly the process of recording with dc bias in view of its historical significance and, as will be seen, because of the critical nature of the optimum bias requirement. Recording with dc bias, of course, gives a poorer signal-to-noise ratio than is obtained with the high frequency bias, and so has yielded to the latter method for high quality audio applications. For fair quality audio work and, in computing machines, the use of dc bias may be more desirable by virtue of its simplicity.

When recording is to be accomplished by means of dc bias, the procedure involved is the following: The recording medium is, first of all, magnetically saturated in a certain direction with a dc erase head, as indicated by OAB in Fig. 11-22. Then in the record head, the function of the dc bias is to bring the medium to a point such as D, and for no signal, on leaving the record head the tape will be in the magnetized state D. In the presence of a signal, the tape coming from the state B may reach the points CDE etc., and hence, have a

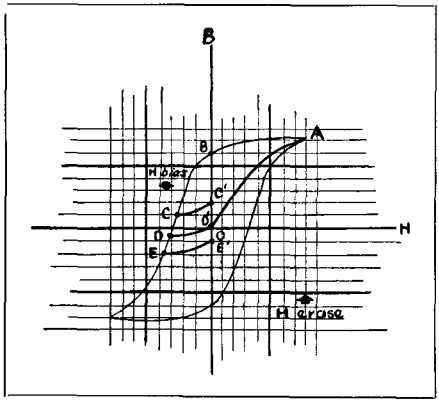

Fig. 11-22. DC Record Cycle.

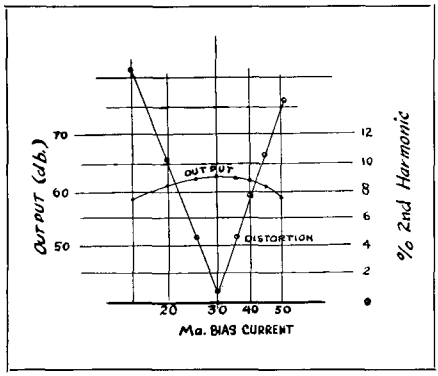

Fig. 11-23. Output and Distortion vs. Bias Current.

recorded signal on it corresponding to C′D′E′ etc.

It is evident then that although the same erase head current may be used to saturate any tape (providing only that the field is sufficient to saturate the most difficult one), each magnetic tape that has a different B-H curve is apt to have a different dc bias requirement. It turns out in practice that not only are different biases required, but that the required biases are critical within a few percent. This means that a machine employing dc bias which was set to record on a tape with a high coercive force would not record at all satisfactorily on a tape with a low coercive force without changing the bias. This is in contrast to ac bias recording where, although the optimum biases required are different, various media can be recorded fairly satisfactorily at the same bias.

The reason that the bias is so critical is that, as one shifts to a bias that is either too high or too low, there appears a marked increase in *second* harmonic distortion. Since the presence of undue second harmonic is indicative of improper bias, the correct bias may be found quite simply by putting in a large audio signal and adjusting the bias until the second harmonic contribution is a minimum. This condition occurs in the region of maximum response.

The bias as determined in this way is critical enough to allow one to distinguish between various kinds of magnetic coatings. Typical curves of output and second harmonic distortion versus bias current for a constant input are illustrated in Fig. 11-23. The noise level of the erased tape is, of course, high.

The above discussion brings to mind some advantages which ac bias has provided for magnetic recording: 1) better signal-to-noise ratio, to a large extent due to the quieter erase 2) less critical bias requirements and 3) along with the increased signal in a good system there appears none of the second harmonic distortion which is so prominent in recording with dc bias.

Erasure by Permanent Magnets

It is well known that in erasure of magnetic tape a satisfactory device is the usual type of erase head which employs high frequency alternating current. This type of head, when well designed, not magnetized, and operated from a good source high frequency ac, will not only obliterate any previous recording on a tape but will leave the tape in a demagnetized condition. This demagnetization of the tape is important in keeping noise and distortion down to low values.

While this type of head is very fine from a magnetic point of view, there are practical considerations which make erasure by permanent magnets attractive, such as economy, dependability, freedom from servicing, etc. By using permanent magnets, one very easily accomplishes the obliteration of previous recordings, but it is not so easy to avoid leaving the tape magnetized in one direction. Since a single pole of a magnet will leave the tape fully magnetized to saturation, this type of erase will result in very high noise levels and serious even order harmonic distortion.

To minimize this effect more than one permanent magnetic pole may be used so that the tape is left in a nearly demagnetized condition. A very large number of poles of successively opposite polarity and gradually decreasing strength is, of course, equivalent to an ac erase, but a practical design may involve the use of a small number of poles as an approximation. One head in common use, the type in the *Brush* "Soundmirror," and the *Wilcox Gay* "Recordio" uses two magnets arranged to give essentially a three pole erasure as in Fig. 11-24.

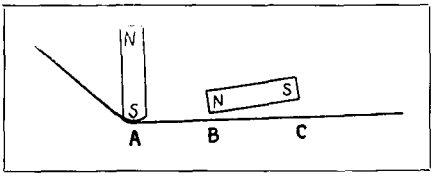

Fig. 11-24. Magnets arranged to provide three pole erasure.

Successively opposite field maxima are experienced by the tape at points A, B, and C. At A the tape contacts the magnet and experiences a saturating field which obliterates previous recordings. The function of the fields at B and C is to leave the tape in such a condition that it is essentially demagnetized. To do this the fields must be of the correct strength. This is accomplished by adjusting the distance between the tape and the poles at B and C to the correct separation to give the best values of field.

In these machines, this spacing between tape and magnet is dependent upon the tape's path of travel being absolutely unvarying. In practice slight variations in tension of the tape, wobbling of the reels, etc., may cause the path to vary slightly. Under these conditions, performance may be improved by insuring that the tape to magnet spacings at B and C remain fixed at the best values. One good way to do this is to use non-magnetic shims attached to the magnet and then allow the tape to bear positively against these shims. Such shims can be made of brass, paper, or any other non-magnetic material, including *"Scotch"* Tape. Whether or not *"Scotch"* Tape is used permanently it makes an excellent tool in finding the best shim thickness. A num-

ber of layers may be fixed at B and at C until the noise as heard in playback is a minimum. The tape may then be replaced with a more permanent shim of the same thickness if desired.

In one head it was found that a separation of about .003 inch (one layer of *"Scotch"* Tape) at B and about .028 inch at C gave the minimum of noise. These dimensions are probably fair for other heads, but with differences from magnet to magnet an individual head should be tested with the tape to be used, to determine the spacings for best results.

In magnetic tape recording with present day ring type record and reproduce heads, it is essential that the tape maintains an excellent and unvarying intimate contact with the head.

The principal effects of poor contact between tape and head in playback appear at high frequencies. This is because the field from poles in the head falls off with distance from the tape more rapidly when the poles themselves are close together. There are also serious effects in recording which are more complex. They depend upon the geometry of the record head and include poor high frequency response due to a less abrupt decrease in fields at the second edge of the record gap and distortion from variations in bias from the optimum value. The following data refers only to playback, but it should be recognized that there may also be approximately equal effects at the record head.

In these tests a tape was recorded with various frequencies and played back on a good system with good contact. Then the same tape was played back several times with various paper shims covering the playback head so as to separate tape and head by known amounts, and the level recorded for each frequency and separation. From these data, Fig. 11-25 was plotted. These curves show the attenuation caused by various separations of tape and playback head. On the frequency scale the data are plotted as for a tape speed of 7.5 in./sec., but it should be remembered that this is not a frequency but a wavelength effect; for a given separation the same attenuation will result at 5000 cps and 7.5 in./sec., 10,000 cps and 15 in./sec., 2500 cps and 3.75 in./sec., etc. The wavelength scale shown below the frequency scale is, therefore, more significant and is true for any tape speed.

Examination of these data shows that the attenuation depends most fundamentally upon the ratio of the separation to the wavelength. Thus, for example, the same attenuation results from a 10 mil wavelength and 1 mil separation as for a 45 mil wavelength and 4.5 mil separation. This consideration leads to Fig. 11-26, in which the attenuation is plotted against this ratio of separation to wavelength. This curve is universally applicable for any speed, frequency, and separation. From it one can compute the data for very small separations and this was done in Fig. 11-25 where the dashed curve for a separation of .1 mil (2.5 microns) is shown. This curve may not be strictly accurate, but shows on order of magnitude.

Of course, these attenuations are only part of the high frequency losses due to gap effects, demagnetization, head misalignment, etc., but it may be seen that extremely small deviations from perfect contact can have very serious results in the high frequency response. To minimize them the head must be smooth and have curvature in one plane only; the tension (or pressure) must be adequate, and the tape must be

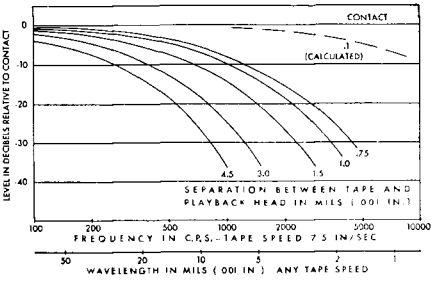

Fig. 11-25. Signal attenuation caused by poor contact in playback as function of frequency (or wavelength) for various separations.

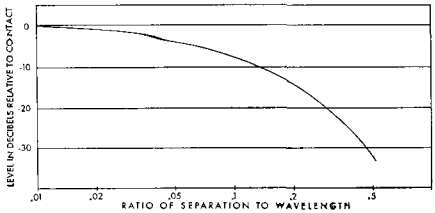

Fig. 11-26. Signal attenuation caused by poor contact in playback; universal curve for any speed, frequency, and separation.

smooth and flexible. This latter requirement may best be met, while retaining adequate strength, by *Minnesota Mining* plastic backed tape and is one reason (in addition to lower noise) that plastic tape gives results superior to those with a similar paper-backed tape.

Frequency Dependence of Permissible Recording Current

In magnetic recording, there is a widespread tacit assumption that overload occurs for a given recording current regardless of frequency. In some careful work, allowance is made for decreasing head efficiency at high frequencies, but little experimental data has been published confirming the basic assumption.

The reason for this is that the measurements are not easy. With harmonic distortion measurements, the third harmonic frequency becomes too high for a fundamental frequency above one-third the highest frequency response. Intermodulation data employing a high and low frequency are of no value, because any analysis of such data requires a knowledge of the distortion characteristic at both recording frequencies.

The method that has proven useful for these tests, and for many other tests, is that of cross modulation distortion between two nearly equal frequencies. If two frequencies, F_1 and F_2 are recorded by a non-linear system, there will in general be observed at the output all of the possible sum and difference frequencies. Third order differences ($2F_1 - F_2$ and $2F_2 - F_1$) are the most significant in testing magnetic media, corresponding as they do to third order harmonic distortion.

Using this method of measurement, the distortion characteristic of the medium may be determined up to the highest recordable frequencies with each measurement indicating the distortion characteristic of a narrow range of frequencies. When this is done, it is found that various tapes differ in the recording characteristic which will result in equal distortion at all frequencies. With *"Scotch"* Sound Recording Tape No. 111 at 7½ inches per second, the permissible recording current is constant up to about 1200 cps, and above that rises gradually until at 7000 cycles, 4 db. greater recording current may be used.

This behavior is different for different types of magnetic material. With *"Scotch"* Sound Recording Tape No. 112 the permissible recording current is constant to about 4000 cycles above which it decreases until at 7000 cycles it is about 2 db. less. Various foreign and competitive tapes have still different characteristics. In general, there appears to be a direct correlation between coercive forces and the permissible high frequency pre-equalization. Since recording levels are usually set at low audio frequencies, it is important to realize that different tapes may show different high frequency intermodulation effects and to use the pre-equalization which gives the best compromise between distortion and signal-to-noise ratio.

These data apply to a speed of 7.5 inches per second, but measurements at a variety of speeds have been made. These data indicate that the effect is a wavelength rather than a frequency effect. These same data also indicate that the change in distortion at high frequencies is not due to the variable ratio between audio and bias frequencies.

Tests similar to these have been performed at the *Stromberg-Carlson Company*, and the data are available in their twentieth Monthly Progress Re-

port to *Evans Signal Laboratory,* March 15, 1948. Their tests showed comparable results with the ones performed at *Minnesota Mining and Manufacturing Co.*

Another question which has often been raised relates to the effect on pre-equalization caused by changing bias current. It is well known that, other things being equal, a higher bias current results in poorer high frequency response. Without specific data it is impossible to predict whether this loss of highs could be made up by additional pre-equalization or not. If the distortion is a function of the recording field, one would expect that it could not be compensated through pre-equalization whereas if it is a function of the recorded level of magnetization, it could be recovered simply by increasing the recording current. Tests at *Minnesota Mining* have shown that the former is more nearly correct, and that for all practical purposes, the loss of highs due to the effect of bias cannot be recovered by pre-equalization without a comparable increase in distortion of high frequencies.

Visible Tracks on Magnetic Tape

The sound track recorded on magnetic tape may be made visible by means of a method which is similar to the mapping of fields around magnets by means of iron filings. The iron particles must, of course, be much smaller than iron filings. The particles which are used are carbonyl iron with a diameter of about 3 microns—or about 0.0001 inch. In addition to being small, the particles must be able to move about so that they can settle in regions where the tape is strongly magnetized. In order to provide the desired mobility, the carbonyl iron may be dispersed in a light oil or in a volatile substance such as heptane. Even ordinary water may be used. See Chapter 12.

In order to see the track recorded on a piece of magnetic tape, the simplest method is merely to pass the recorded tape through a suspension of carbonyl iron in heptane. The heptane quickly evaporates, leaving the carbonyl iron particles settled on the regions which are most strongly magnetized. The longer wavelengths recorded on the tape are evident to the naked eye. Very short wavelengths, as short as 0.001 inches, may also be observed. However, in the case of the short wavelengths, more satisfactory results are obtained if the carbonyl iron is dispersed in a light oil instead of being suspended in heptane.

The track made visible in the manner described above has a number of uses. One application of the method is to permit an evaluation of the degree of alignment of magnetic heads. This requires a study of very short wavelengths. One can determine with a microscope whether or not a recorded track is perpendicular to the direction of tape travel.

Another application is in editing, which may be facilitated by making the sound track visible. Relative positioning of the sound tracks in multi-track recording may also be examined. Defects in the gaps of record heads may be revealed, and some idea of fringing effects may be obtained. Occasionally one may find tape defects which contribute to noise, using a microscope to examine the visible track.

The method cannot be used to reveal weakly recorded signals and for best results a fairly high signal level is necessary.

Time Effects in Erasing Magnetic Recordings

It is well known that the difficulty of erasing a magnetic recording is a function of the magnetic material used, depending upon the coercive force and more particularly the saturating field for the medium. It has also been observed that high frequencies are more easily erased than low frequencies. This is probably an effect of the geometry of the field at an erase head, since the field is strongest at the surface of the tape and the front surface magnetization is predominant in high frequency signals. It has also been shown that

the difficulty of erasure is affected by the bias current used in recording. However, it has apparently been tacitly assumed that there are no time dependent factors in the difficulty of erasure. This is a plausible assumption, since recorded signal levels and the magnetic properties of the tape do not change measurably with storage, but it has been found that it is not true.

Generally a recorded signal becomes harder to erase after storage. A loud note, which can be easily erased immediately after recording, may become so much harder to erase after months of storage that two or three times as much erase current is required to obliterate it. In extreme cases it has been found that an ordinary erase head could not be excited sufficiently to get rid of the signal altogether. In such cases an "external" erasure by a strong electromagnet (for example, the *Goodell "Noiseraser"*) completely eliminates the signal, Fig. 11-27.

This device will completely erase saturation signals from the tape without leaving residual noise and at the same time will reduce the inherent tape noise to below the noise of virgin tape. For this reason it is recommended that all new reels of tape be processed with the *Noiseraser* before being used for the first time in order to minimize inherent noise.

Noise from the tape is reduced with the *Noiseraser* to so low a level that ordinary laboratory methods of measurement cannot be used and observations can be made only with exceptionally quiet amplifiers and listening tests. The reduction of inherent noise level in the tape permits an increased dynamic range in recording of from 4 to 6 decibels which minimizes the probability of peak signals producing distortion.

When the *Noiseraser* is used, the erase head on recording machines should be by-passed or disconnected. Some erase heads actually add considerable noise to the tape and should not be used at all. On the *Brush* and similar machines it is relatively simple to thread the tape behind the erase head instead of in front of it when recording.

A simple and effective demonstration of these facts may be made by taking a reel of tape that has been erased in the

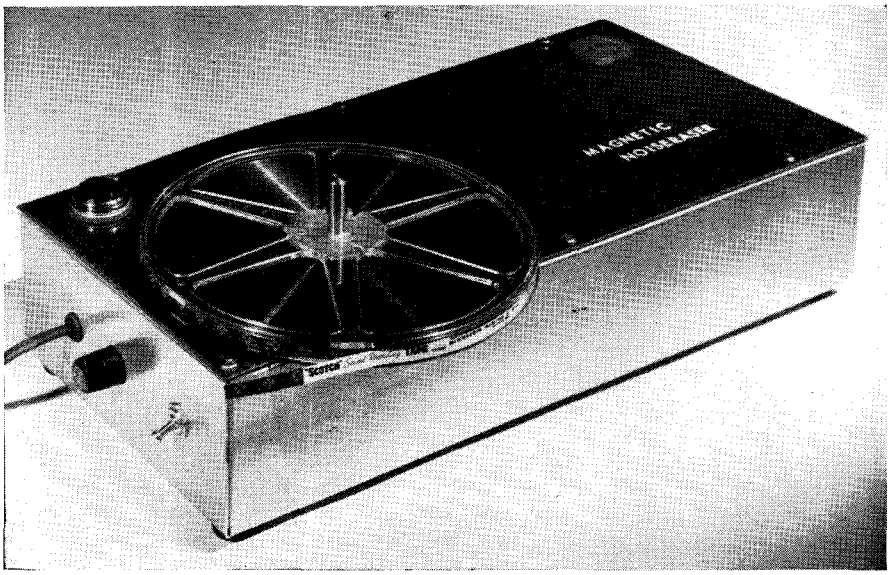

Fig. 11-27. The Goodell Magnetic Noiseraser.

Noiseraser and running a few feet of it through the erase head in the record position with no signal applied. Then proceed to process the tape through the *Noiseraser* but rotate it only through half a revolution. Then play it back and listen to the intermittent noise from the portion that was passed through the erase head on the recorder but was not fully processed by the *Noiseraser*.

After storage, an erase head may reduce a loud signal by perhaps 55 db., after which external erasure reduces it to a level at least 80 db. below its original level. The signal may then be "revived" to a level of perhaps 60 db. below the original level, which may leave it audible even if below the noise level. This would be a very severe case, with much less effect being observed in most instances. Such performance has never been described in the literature and there is no adequate theoretical explanation available.

Heat has the effect of speeding and accentuating this increase in permanency, so that a reel stored a few hours at 80° C. shows the same effects as a roll stored months at room temperature.

A recording which has aged and become semi-permanent may, however, be removed by demagnetization and stored in the demagnetized state. Elevated temperature of storage in the demagnetized condition accelerates the obliteration of the magnetic "memory."

In the case of recordings already made the following procedures may be of practical importance:

1. Store tapes in erased rather than recorded condition, when the recording is no longer needed.
2. A tape having a background signal which cannot be completely erased should be stored for a few days in the erased condition, preferably not in a cool place.
3. Store recorded rolls in a cool location (this is also advisable for long tape life and freedom from layer-to-layer signal transfer).

Layer-to-Layer Signal Transfer in Rolls of Magnetic Tape

When a length of recorded tape is wound into a reel, each layer of tape is in the magnetic field of its neighbors. Since any magnetic material placed in a field tends to be magnetized to some degree by it, each layer is magnetized to some extent by its adjacent layers. The important point is the degree of the magnetization, which may vary from totally undetectable, the normal condition, to nearly as large as the adjacent layer, in case of accidental exposure to external magnetic fields.

The effect is non-linear; i.e., transfer is like recording with no bias. The transfer level will decrease perhaps 2 db. for each 1 db. decrease in recording level. Thus, effects are noticed, if at all, only as a result of very heavily modulated or overloaded portions of tape. Therefore, the signal-to-transfer ratio may be increased by lowering the recorded level.

The effect increases with time of storage, over a period which may vary from several days to several months depending on the conditions of storage. In practice, transfer cannot usually be detected except after considerable time.

The effect increases with temperature. The temperature coefficient is not the same for all tapes and all times of storage, but is approximately 1 db. per 10° F. Thus it is advantageous to keep recorded reels in a cool place.

The transfer effect is usually well below the noise level if the recorded reel is kept away from all stray magnetic fields. Such fields (ac or dc) can act to increase the transfer by a few or even 30 or 40 db. Most cases of objectionable transfer can be ascribed to this cause. Whereas fields of the order of several hundred oersteds are required to cause even a measurable erasure and one or two thousand oersteds for complete erasure, transfer may be noticeably increased by fields of only a few oersteds. It is therefore, important for the highest quality work to keep the recorded reel away from any

sources of stray fields such as motors, heavy power lines, magnets, etc.

The effect is frequency dependent, with middle frequencies most important. Low frequencies are weakly transferred because the field strength associated with long wavelengths is less than with shorter wavelengths of the same magnetization. This coupled with the non-linear amplitude effect makes very long wavelengths unimportant in transfer. High frequencies are weakly transferred because the non-magnetic backing layer of the tape causes a much higher attenuation of the fields of very short wavelengths than of longer wavelengths. Some decrease in transfer can be effected by the use of thicker backing material, but the difference is mainly in the higher frequencies.

It should be emphasized that the problem of transfer is not bothersome to an average user. The effects discussed are generally well below the noise level of the tape and special efforts are necessary to detect and measure them. The existence of transfer at an annoying level is fair evidence of neglect of one or more of the above principles. Noticeable signal transfer is not a necessary evil of tape recording, but merely a possible hazard.

To summarize, we may avoid noticeable layer-to-layer transfer of signals in rolls of recording tape by:

1) Recording below the overload point of the tape
2) Avoiding exposure of recorded rolls to magnetic fields
3) Avoiding storage of reels in hot places.

Performance Testing of Magnetic Recording Tape

1. SETTING OF BIAS is an important function which will affect greatly the performance factors. Accurate measurement of effective bias is difficult since the actual bias flux in the tape is the determining factor. Measurements can be made of ampere turns or of voltage to a certain head bias winding, but differences in heads or bias frequency cause these figures to lose a great deal of their meaning unless referred to specific equipment. Each manufacturer should develop his own setup for making comparisons considering his own equipment.

One method which has been found helpful consists of determining how much the bias flux reduces a signal of known level. The measured signal (usually near saturation) is recorded on the tape. This recorded tape is then passed over the head with the unknown bias, and no audio input. Care must be taken not to expose the tape to an energized erase head. A 1/32" thick strip of brass or copper over erase structure is adequate to insure no erase effect. A playback of the tape will then reveal how much the unknown bias has reduced the recorded signal. Comparison can then be made, one test to another. Another method consists of using two tapes having different bias vs. output characteristics. First a calibration must be obtained on each of the tapes, plotting output vs. bias. These two curves superimposed will indicate a certain difference of output for a given bias. If then, the two tapes are spliced and recorded together using the bias to be determined, the difference in playback output of the two will establish the effective bias flux of the head measured.

Determination of a "best" bias can be approached by first obtaining bias level for maximum mid frequency response. With this condition low frequency distortion may be greater than desired. The bias flux should be increased somewhat above this level, compromising reduction of low frequency distortion with loss of high frequency response. The amount of increase required will depend on the tape to be used and factors of the recording machine such as head, bias frequency, tape speed and other factors.

Asymmetry of bias wave shape must be avoided for best results in minimizing noise and distortion.

Permo-Magnetic Tape is interchange-

able with other tapes in usage since the bias requirement falls between that of other recording tapes available. This flexibility of *Permo-Magnetic* Tape is a distinct advantage.

2. FREQUENCY RESPONSE TEST can be made as follows: An Audio Oscillator (*General Radio* 913 C) together with *Sound Apparatus Company Recorder* and *F. R. Link* drive unit is used to record a signal on the tape. A normal signal level of constant head current is selected depending on head used (10 to 15 db. below saturation). For 3¾″ and 7½″ per second tape speeds, the frequency band from 20 cycles to 10,000 cycles is swept by the oscillator with drive unit. For 15″ per second speeds and higher, the band from 20 cycles to 20,000 cycles is swept. This records the variable frequency on the tape which is then played back and charted to obtain a typical frequency response chart. Various operator techniques may be developed to insure proper chart register such as momentarily shorting input to recording head at various frequencies. This will obtain "pips" on playback chart.

To avoid possible errors due to synchronization of chart and other errors due to short time variations, another type of chart is made. Normal signal levels at 3 frequencies, 100, 1,000 and 5,000 cps are recorded on the tape. Each frequency is recorded for about a minute. The tape is then played back and charted. An inspection of the chart shows that an average performance is indicated over a considerable length of the tape at the three frequencies. These results are compared to a standard tape which is retested each time with the test sample to rule out changes in test equipment or heads.

This same frequency response curve can be developed without the use of special chart recording test equipment. In this case, several test frequencies can be selected such as 100, 400, 1000, 2000, 3000, 5000, and up. A signal of each of these frequencies from an audio oscillator is recorded. Then in playback an output reading is obtained for each frequency. A plot of these values will develop the typical response curve.

3. DYNAMIC RANGE—Signal-to-noise ratio is a measure of difference between signal level and noise. A great deal of variation can occur in measurement of these factors, depending on equipment setup used, and definitions. User performance will be best measured using regular complete recorder setup with equalization.

Data useful for test and comparison purposes can be obtained using constant current for recording and playback through an amplifier flat from 20 to 20,000 cycles.

a. Saturated Signal can be secured by increasing record current in record head until no further increase in playback signal is noted. Frequency of maximum response may be used for this or, for a definite reference point, it is often convenient to use 1000 cycles at 7½″ per second tape speed.

b. Normal or useful signal level may be obtained by finding the maximum playback signal to be obtained, not to contain more than a set selected percentage of harmonic distortion. 2% third harmonic distortion has been used as an arbitrary point to make comparisons. These distortion measurements may be made at different recording levels to find the level at which 2% is exceeded. A Harmonic Wave Analyzer should be used for the measurement. Care must be taken that pass band of instrument is wide enough for variation in tape speed with drive mechanism used.

c. Noise Level of Tape may be determined in different ways.

1. Erased Tape Noise can be determined, which is independent of erase heads, bias, erase and bias oscillator and other machine factors, by use of bulk type erasers such as the *Goodell Noiseraser*. These units use a 60 cycle field and erase the tape wound on a reel. After bulk erasure the tape is passed through a playback head and output

can be determined. This noise will usually approach or fall below vacuum tube noise or "hum" of test setup if the playback head is free of residual magnetization.

2. AC Erased Noise, as associated with recording machine, can be measured by passing through regular erase head, then through playback head to measure level.

To measure the ac noise most related to tape usage on a given machine, the tape must be erased as above, and also passed through recording head with bias on. This would be normal operation. Then the tape is passed through playback head for measurement of level.

These two ac erase noise tests, as made on a machine, will reflect characteristics of individual machines as well as tape character. Machine factors affecting the results are quality (symmetry) of bias and erase oscillator, individual head characteristics and equalization.

3. DC Noise (similar to modulation) is measured by passing the tape through the record head using a dc current to obtain saturation or maximum dc noise. Normal bias is also used along with the dc as this is a regular operating condition. Signal is then measured when tape is passed through the playback head.

The measurement of dc noise can also be made by the use of a permanent magnet held close to the tape just ahead of the playback head and, at the same time, read the playback signal. This is not considered as reliable as using dc in the record head since the magnet may not always be held at the same actual distance from the tape.

4. Output Level is obtained in the signal-to-noise ratio measurements. The consideration of output level as such, evaluates the level with respect to a given reference. High output, of course, is desirable to be as far above hum level and tube noise as possible.

5. Sensitivity is a ratio of signal output of a record to the signal input. A test may be made by establishing a standard signal input which may be a certain recording current or voltage to a given head. The signal output will be obtained with playback and read in db. For this test, optimum bias and signal frequency are important. Relative sensitivity is important to a manufacturer setting a recording level indicator.

6. Erasability of recording tape may be measured on a recorder setup by determining how many db. a recorded saturated signal may be reduced by one pass through the erase head. A 1000 cycle signal may be used and the remnant playback signal may be measured on a narrow band setup in order to permit measurement below erased noise level.

Listening on this test is also helpful in detecting signals below noise level, particularly if narrow band measurements are not convenient.

7. Uniformity is a measure of uniformity of playback output signal over a length of tape (full reel 600′ or 1200′) with recorded input held constant. A normal signal of 1000 cycles (or some other frequency) is recorded on the full length of tape, played back and charted.

CHAPTER 12

Magnetic Tape Recorders

The mechanical and electrical requirements in the design and application of magnetic tape recorders for home and professional use.

● A magnetic tape recorder consists of three interdependent assemblies: 1, the mechanical unit for moving the tape; 2, the magnetic circuits of the recording and reproducing head in combination with the tape; and 3, the electronic circuits.

Mechanical Requirements

Magnetic tape sound recorders should have a constant velocity drive. This can be best achieved with a wrap-around capstan or pinch roller drive mechanism. Reel drive is undesirable because of the large change in diameter as the reel empties. A constant velocity drive makes editing possible by cutting and splicing.

Magnetic tape sound recorders, like all types of recorders, must be reasonably free from wow. The average ear is very sensitive to two common types of wow, namely, frequency wow and amplitude wow.

Frequency wow is a mechanical difficulty which is present in all types of sound recorders unless special precautions are taken to eliminate it. Frequency wow consists of a periodic variation, such as is introduced by gear teeth, eccentricity of mechanical rotating parts, or irregularities in belts, and also by random variations which may result from frictional irregularities.

Amplitude wow, that is, the periodic or random variation of loudness, is reduced to a minimum when professional high quality magnetic tape is used, because the coating process used in depositing the magnetic powder on the tape produces a more uniform magnetic member than can be attained by other methods of manufacturing magnetic recording media, and also because the metallic nature of the magnetic powder permits a high degree of homogeneity in the manufactured product.

The solution of the problem of wow in the magnetic recorder is no more difficult than it is in any other type of sound recorder; in fact, the problem is almost identical to that encountered in talking motion pictures, because the recording medium is of similar shape and travels at a comparable speed.

It is difficult to obtain wow-free recording with systems involving gears, especially if heavy flywheels are to be avoided. It is possible to produce specially-cut gears that are wow-free, but in general this is costly and out of the range of a popularly priced unit. Flat belt drives on flat flanged pulleys have been found to be satisfactory because they are relatively free from periodic variations. Round or V-belts generally cause difficulty, because the slightest irregularity in the thickness or stiffness of the belt results in its clinging in the groove of the pulley.

Rubber-tired friction drive wheels have proved very satisfactory, especially for designs in which the rubber drive

wheel is subject to little or no contact pressure during the idle periods.

The drive capstan or drive wheel should be directly coupled by a common shaft to a flywheel of as large rotational inertia as practical. The rpm of the drive capstan should be as high as possible, so that a maximum momentum will be achieved. It is quite practical to have the drive wheel as small as three-fourths of an inch in diameter. Experience has shown that the takeup reel may be driven from the shaft common to the flywheel and drive capstan, if the flywheel has sufficient momentum to overcome the random variations of tension on the tape caused by the reeling mechanism. If it is desirable to keep the flywheel size and weight to a minimum, the takeup reel should be driven through a suitable speed reduction device direct from the motor.

The braking and drive mechanism should be so designed that the tape remains under a continuous tension when the direction of the tape is reversed. As the reel size increases, additional braking power is needed. High tensile strength of tape permits the designer a considerable degree of latitude in designing brakes and driving mechanisms. Friction and belt drives naturally provide adequate slippage under extreme loads to minimize the danger of tearing the tape.

As a protective feature, it is desirable that the rewind switch be mechanically linked to a permanent magnet eraser, so that the eraser is automatically thrown out of contact with the tape whenever the machine is rewound. In the design of a machine where the eraser is placed in advance of the recording head, there is no advantage gained by being able to erase during the rewind.

Electronic Circuits

The electronic circuits of a magnetic tape recorder may be divided into four parts for purposes of description and discussion; (1) the input matching transformer, (2) the equalizer circuit, (3) the audio amplifier, and (4) the high frequency bias oscillator.

Since most magnetic recording and playback head designs have relatively low impedance windings, it is necessary to use a matching transformer between the head and the input of the amplifier. As the signal at this point is of rather low level, precautions must be taken to shield the transformer both electrically and magnetically. The only other real requisite for the transformer is that it have a reasonably good frequency response.

It is well-known to those versed in the art of magnetic recording that equalizing networks are necessary to compensate for the constant current recording characteristic of the particular head and recording medium used. Because of the nature of magnetic recording, the constant current frequency response characteristic rises approximately 6 db. per octave of recording medium used. Either single or multiple stage equalizers may be used; however, practice shows that single stage circuits can give very satisfactory results.

For the playback operation, the amplifier circuit will be considered in two parts. The driver and output stages, as one part, can be considered the equivalent of the average audio amplifier of a radio receiver in design and characteristics. The other part is a preamplifier, which is necessary to compensate for the losses in the equalizer and for the difference in signal level at the secondary of the input matching transformer and that at the output of the detector stage of a radio. This makes possible the design of an attachment which contains only the preamplifier and equalizer circuits. The signal from this arrangement may be fed into the audio amplifier of a radio in the same manner as for phonographs.

In an attachment as described in the preceding paragraph, it is necessary to have a low power output stage for the recording function. This allows normal radio listening while recording.

The present method of recording on magnetic tape requires a source of high

frequency used in conjunction with the audio signal. A simple, non-critical Hartley oscillator circuit serves this purpose excellently. The bias signal is applied to a separate winding on the recording head. The only critical requirement with this circuit is that it be sufficiently well shielded to prevent heterodyning with an associated radio.

As in any relatively high gain audio amplifier, it is necessary to take adequate precautions with the power supply filter and with the layout of components, particularly in the preamplifier stages, to reduce the hum level to a minimum.

Functional Requirements

Fig. 12-1 is a block diagram of the electronic components of a complete self-contained unit with the main switching functions given to illustrate how the components of the circuit are utilized for either recording or reproducing.

The amplifier consists of two voltage stages utilizing a single 6SL7, an equalizer network, a 6SC7 as a phase inverter, and two 6V6's in push-pull in the output stage. Other components shown are a record-playback head with a non-inductive resistor in series, a Hartley oscillator for the bias supply, a suitable volume indicator circuit, and a well-shielded input transformer.

With the selector switch in the "record" position, a signal may be fed from a microphone into the first stage, or from the detector stage of a radio, or from a phono pickup to the second stage. From that point the signal may be followed through the equalizer network, the remaining stages of the amplifier, and thence to a portion of the winding on the record-playback head through a non-inductive resistor. A signal of 35-60 kc. from the bias oscillator is fed to the other portion of the winding on the head. The method of applying the high frequency bias signal and the audio signal to separate or tapped windings has been found to be more satisfactory than mixing in the amplifier.

The non-inductive resistor serves two purposes; to match the audio winding of the head (approximately 1 ohm) to a four or eight ohm winding of the output transformer, whichever may be chosen, and to increase the ratio of the signal to the inherent noise of the amplifier (i.e., hum and thermal noise present when gain control is turned down).

The method of recording used requires a magnetically saturated medium to which a high frequency bias signal is applied with the audio signal superimposed. For the type core used in the head design described, from ten to fif-

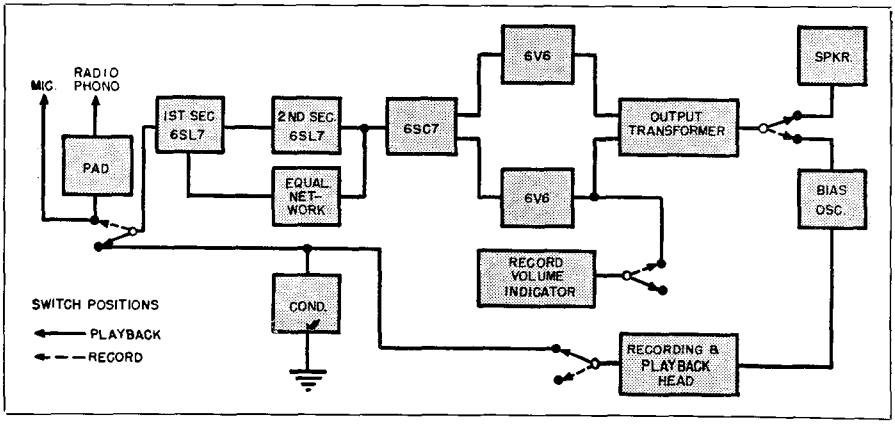

Fig. 12-1. Block diagram of a self-contained portable magnetic tape recorder.

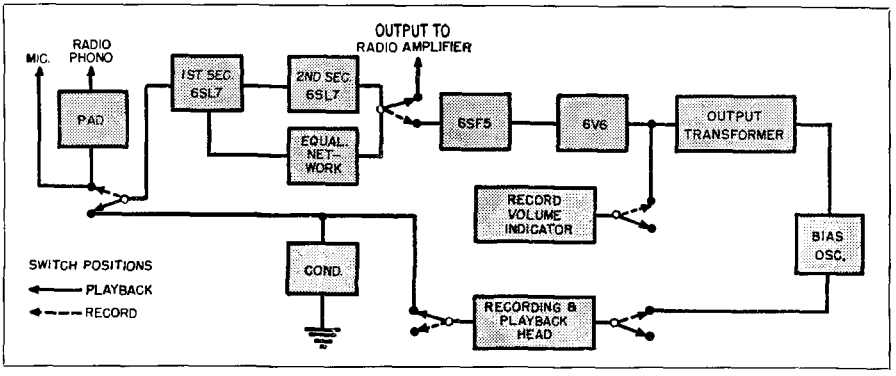

Fig. 12-2. Block diagram of radio adapter magnetic tape recorder.

teen ampere turns are required for the bias component, and from two to four ampere turns for the audio component of the signal.

For the playback function, the selector switch is set accordingly and the signal from the head passes through the input transformer into the first stage of the amplifier. The signal passes through the amplifier in the same manner as for recording, and then to a speaker.

Care must be taken in positioning and shielding the input transformer. Experience has shown that it is most practical to have it as near the head as possible. Shielding should be both electromagnetic and elestrostatic. The voltage gain of the transformer should be from 75 to 100.

The recording volume level indicator consists of a small neon lamp biased so that the maximum desirable peak signal at the plate of one of the output tubes will cause the lamp to ignite. A potentiometer arrangement for supplying the bias voltage to the lamp facilitates proper adjustment.

Fig. 12-2 is a block diagram of the circuit components for a radio adapter unit. Much of the circuit is the same as for the self-contained unit with the exception of the final amplifier stages. It is desirable to have the recording amplifier self-contained in the adapter and to use the radio amplifier for playback only. Two circuits are required between the unit and the radio, one for recording radio programs and the other for the reproduction of recordings. The signal from the equalizer, approximately 0.5 volt, is fed into the phonograph jack or the first audio stage. Other than this the operation of this unit is the same as that of the self-contained unit.

Record-Reproduce Heads

Fig. 12-3 is a simplified drawing of the construction of an experimental record-playback head of low-impedance type. The core is built up in two legs of .007 inch *Mumetal* laminations. Each leg is wound with 80 turns of 28 heavy *Formvar* copper wire, one leg having a tap at the first 30 turns. The tap is grounded, and for recording the audio signal

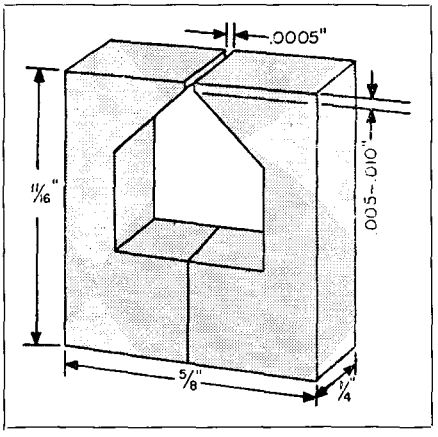

Fig. 12-3. Mechanical details show construction of a record-playback head.

is fed to the 30-turn winding and the bias signal to the 130-turn winding. During playback the signal from the 130-turn winding is fed to the primary of the input transformer. The ground surfaces of the two legs of the core are butted together with a .0005″ thick non-magnetic spacer at the recording gap and tacked at several points with solder. The head may be potted in a small magnetic shield can.

Although the coils are wound on the core in a hum-bucking arrangement, it may be necessary to have additional magnetic shielding between the head and the driving motor and/or the power transformer.

High-Impedance Head

The head developed by *The Indiana Steel Products Company* incorporates basic improvements which add to the flexibility and fidelity of magnetic requirements. This new design incorporates a flat top so that a pressure pad can be used to assure more intimate contact of tape with the gap area. This head was designed in conjunction with *Hyflux* tape and is illustrated in Fig. 12-4A.

Tests have indicated that *Mumetal* is a satisfactory material for a dual purpose head. Indications are that *Permalloy* or other materials of similar composition and characteristics are also

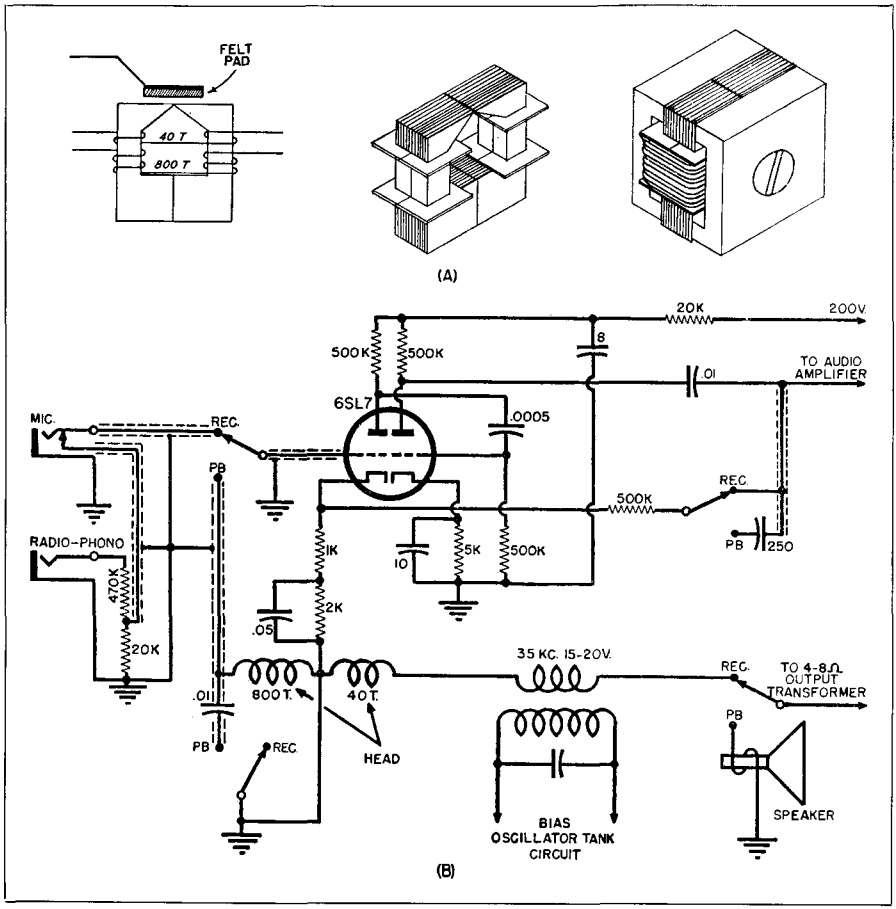

Fig. 12-4. (A) Construction details of head developed for use with "Hyflux" tape. (B) Basic record-reproduce circuit using high impedance head.

satisfactory. It should be emphasized, however, that all magnetic materials of this nature must be properly heat treated after stamping or other cold working. It is imperative that close tolerances shown for pole dimensions be closely held. The gap length should be as short as possible consistent with uniformity. A satisfactory mechanical joint will result in an effective magnetic gap of approximately .0005″. Spacers of any thickness under .001″ usually contribute to non-uniformity and it has been found more desirable to use a plain butt joint between the two polished surfaces when a very small gap is required. A basic record-reproduce circuit for use with this head is shown in Fig. 12-4B.

Bias and Audio Current Requirements

Both bias and audio flux above the gap must be greater than that required by magnetic recording media of lower coercive force. The exact value of current required to produce the proper flux depends on size of the head structure, number of turns in the coil, and pole and gap dimensions. For a head constructed in accordance with Fig. 12-4A the following bias and audio currents are typical of those giving optimum results on *Hyflux* coatings:

Bias frequency	35 to 60 kc.
Bias Current	60 to 75 ma.
Audio	20 to 35 ma.

The bias current is chosen to give highest mid-range output with satisfactory low frequency waveform. Low bias results in low frequency distortion, generally low output, and extended high frequency response. Excessive bias shows up in reduced high frequency response. A practical value should be selected which results in satisfactory freedom from low frequency distortion. A good rule of thumb is to select the bias frequency as five times the top audio frequency desired plus 10 kc.

It is essential that the wave shape of the bias supply be as nearly perfect as possible. Any non-uniformity in the positive and negative half cycles will result in noise and distortion on a recorded signal. It should be remembered that the recording of a signal is due to the displacement of the positive and negative bias peaks by the audio signal component. For example, during a positive half cycle of the audio signal, the bias may alternate through several cycles but each bias cycle will be displaced in a positive sense by the audio signal component. The direction and magnitude of the *remanence* on the tape is proportional to the mean value of the displaced bias cycles which is the audio signal recorded. Since a new portion of tape is constantly being exposed to the gap influence, it is essential that several bias cycles take place for each half wave of audio frequency being recorded. This is necessary in order that any particular portion on the tape will have its hysteresis loops stabilized before leaving the gap area, thereby assuring that the magnetic remanence is linear and at the highest possible value. A typical oscillograph pattern of the sum of the bias and audio currents

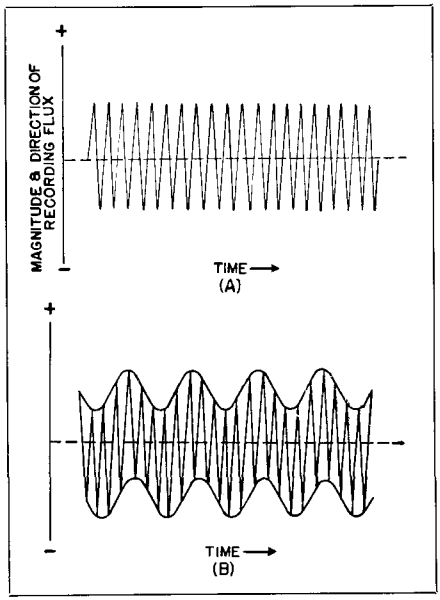

Fig. 12-5. Typical oscillograph patterns. (A) Bias supply and (B) with superimposed audio. It is essential that the wave shape of the bias supply be as nearly perfect as possible. Any non-uniformity will result in noise and distortion on a recorded signal.

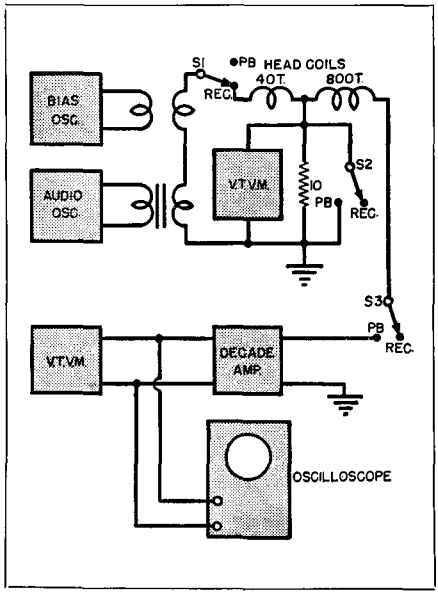

Fig. 12-6. Circuit diagram shows test setup for checking wave shape of bias oscillator.

is shown in Fig. 12-5. The oscilloscope in this case replaces the vacuum tube voltmeter connected across the 10 ohm resistor shown in Fig. 12-6. Bias oscillator circuits which have been found to be satisfactory are shown in Figs. 12-7

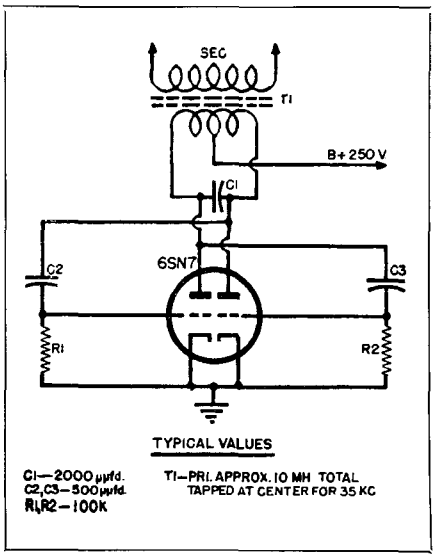

Fig. 12-7. Diagram of push-pull bias oscillator.

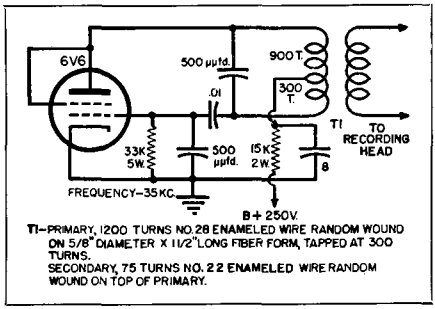

Fig. 12-8. Bias oscillator circuit as applied to magnetic tape recording.

and 12-8. The push-pull arrangement of Fig. 12-7 is highly recommended because it provides an output of better wave shape.

Noise

There are two types of noise which must be considered in magnetic recording. While these two kinds of noise are related and result from the same cause, namely, magnetic variation, the type which rides on the signal, known as "modulated noise," is the most perplexing. Naturally this type of noise is nearly absent when no signal is present and is proportional in magnitude to the average signal. The maximum value of this noise is known as the "saturated modulation noise." The second type of disturbance, "unmodulated noise," may exist even when no signal is present and is usually due to either dc magnetization of the playback head or of the tape, or both. With proper adjustment of the equipment, this noise is usually very low, being down 60 to 80 db. from a maximum signal, particularly in the case of coated media. The magnetic variations responsible for noise are due, in many cases, to irregularities in tape coating and to poor resolution between recording medium and the gap. Noise of the above type is apparently due to small magnetic discontinuities and surface irregularities in the recording media which cause extraneous flux changes. In the case of modulation noise, a recorded signal is modulated by the flux changes.

Erasing Methods

The demonstration machines built by *The Indiana Steel Products Company* have all used permanent magnet erasing and are capable of good fidelity and satisfactory frequency response. The modulation noise seems to be more dependent on the recording medium than on erasing methods when the proper bias flux is used. It is possible to erase maximum signals on *Hyflux* with current at the bias frequency when sufficient power is used in a properly designed erase head. The ability of any erase head to completely erase signals is dependent not only on the coercive force of the medium, but also on the coating thickness. Since thin coatings produce satisfactory output, this tape is relatively easy to erase with the conventional high frequency erase head without excessive heating.

Recording Circuits

With high coercive force recording media, considerable high frequency energy in the form of gap flux is required. Every possible means should be used to improve head efficiency so that the required flux can be produced without heating due to eddy currents. An improved bias and audio series mixing circuit is shown schematically in Fig. 12-6. It has resulted in a considerably improved performance, less bias being required to produce a given value of gap flux. The high impedance pickup winding is open circuited during the recording operation, and a relatively high voltage at the bias frequency appears across its terminals. Care must be exercised in the construction of such a head in order that a breakdown of insulation will be avoided. A bias or audio supply of high voltage from open ended sources, such as the plate of a tube, is not recommended, since it is difficult to obtain efficient transfer to the head windings. Low voltage bias and audio circuits are easier to handle and require less shielding. In using the test setup shown in Fig. 12-6 both bias and audio sources should be continuously variable in both output and frequency over the required range.

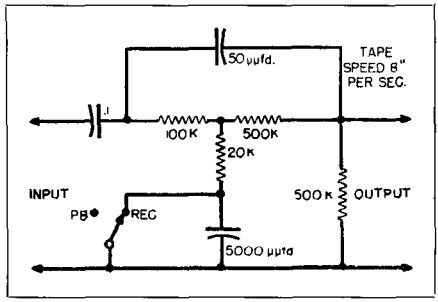

Fig. 12-9. Equalizer circuit for magnetic tape recording.

Equalization

The subject of equalizing the normal tape response is frequently brought up by engineers and experimenters. Several arrangements which are practical can be used. Fig. 12-9 shows one version of a popular tone control circuit which is capable of satisfactory low frequency boost, in addition to considerable high frequency variation. The inverse feedback network included in the schematic (Fig. 12-10) performs satisfactorily. With a properly chosen high impedance pickup head winding, a very satisfactory high frequency boost can be obtained by resonating the circuit with a condenser of proper value shunted across the winding. If the top frequency response desired is 6000 cps, the condenser is chosen to resonate the head at this frequency. As high as 20 db. boost at 6000 cps can be obtained in this manner.

In order to avoid low frequency overload distortion when the bias and audio currents are chosen for best high frequency performance, it may not be desirable to use constant current over the audio range. This is done by pre-equalizing the highs to obtain a rising recording characteristic.

Frequency Response

With the proper choice of heads, circuits, correct bias and audio current adjustments, the frequency response of many magnetic tapes at 7½" per second

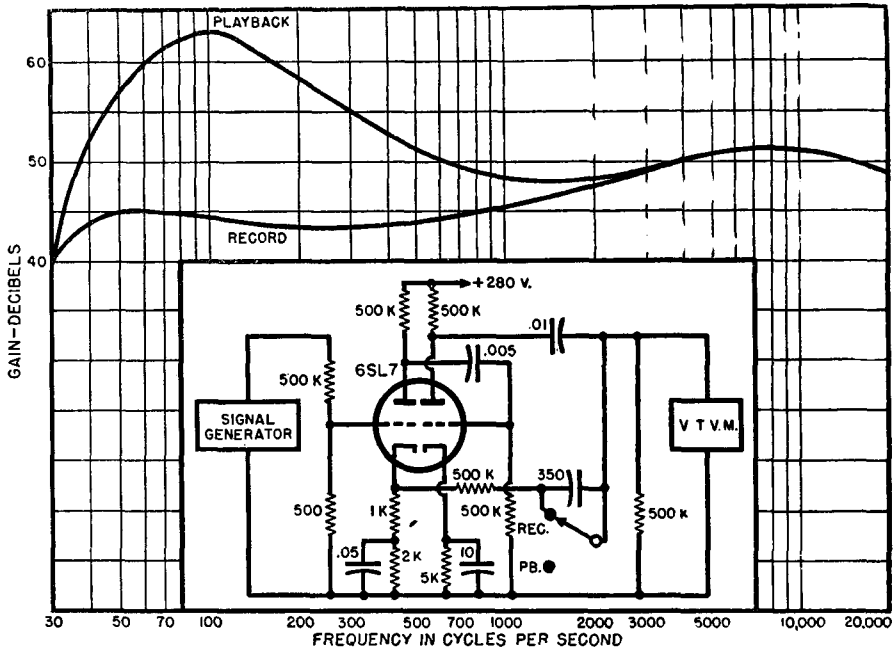

Fig. 12-10. Response curves show the low frequency boost available from the circuit shown. Inverse feedback is used to obtain these results.

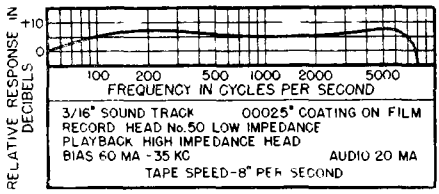

Fig. 12-11. Typical frequency response curve. Low and high frequency ends have been boosted to give flat frequency response.

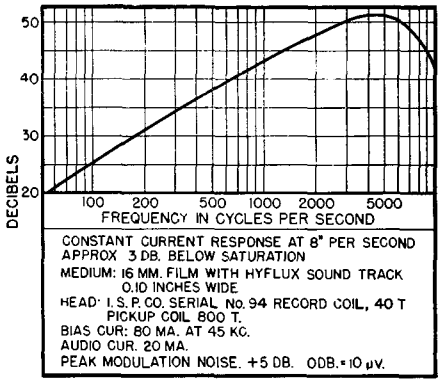

Fig. 12-12. Constant current response using Hyflux tape at 8 inches-per-second.

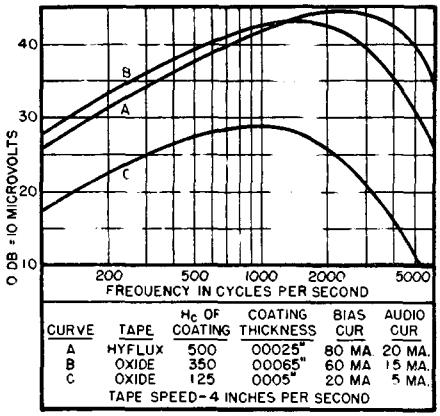

Fig. 12-13. Response curve similar to that shown in Fig. 12-12 with the exception that tape speed has been reduced from 8 to 4 inches-per-second. Curves B and C show results using oxide-coated tape.

is easily equalized to from 100 to above 7000 cps flat to within 3 db. A typical frequency response curve employing a resonated head for high frequency boost and a bridged T network for low frequency adjustment is shown in Fig.

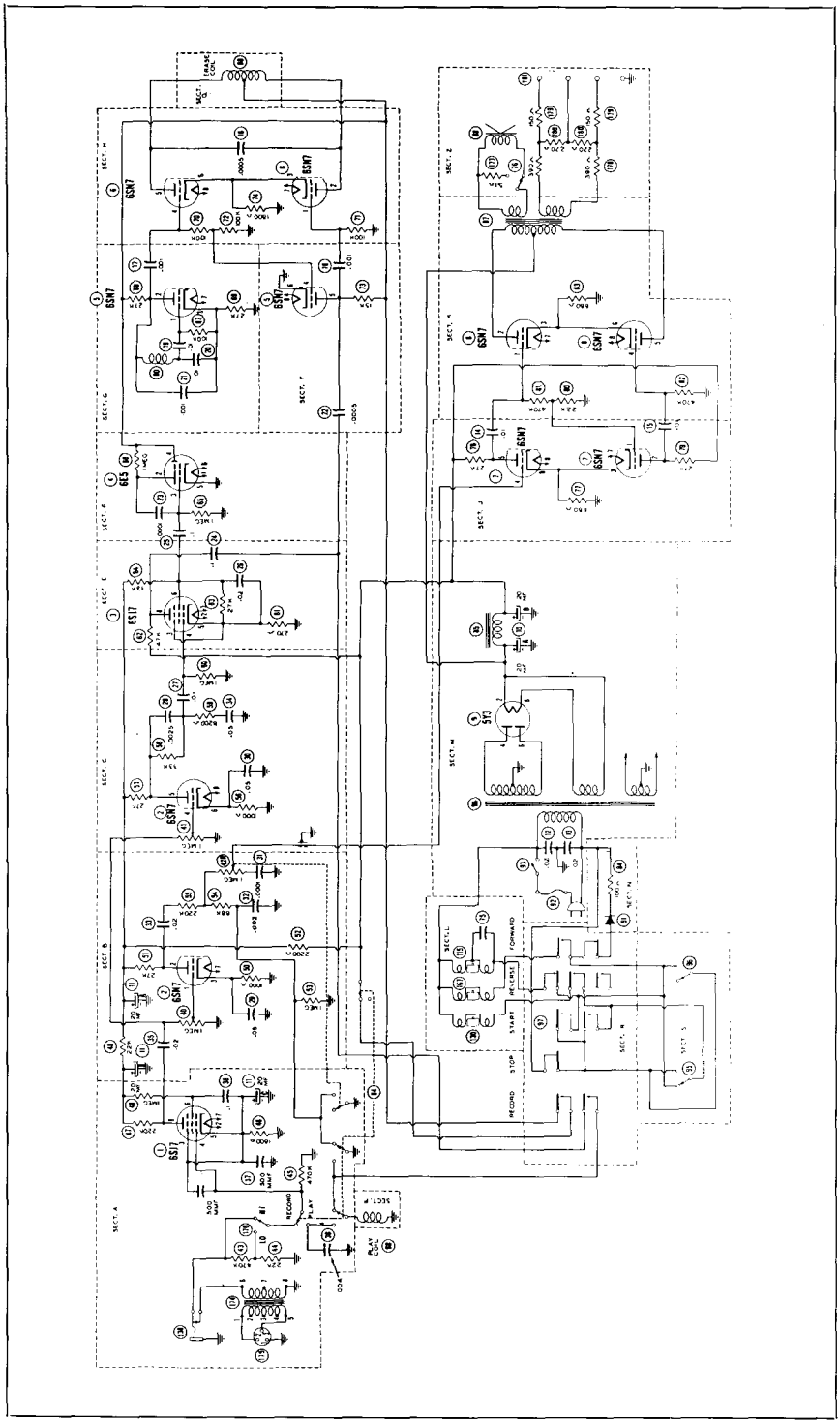

Fig. 12-14. Complete schematic diagram for "Soundmirror" tape recorder. A 30 kc. ultrasonic oscillator is used to demagnetize the tape.

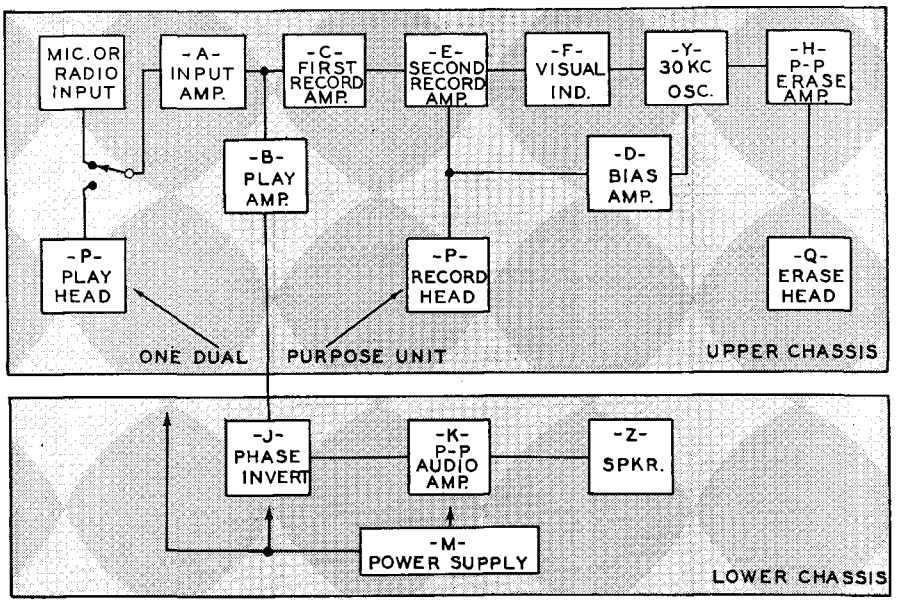

Fig. 12-15. Block diagram shows functional operation of tape recorder.

12-11. The low frequencies are boosted about 15 db. maximum at 100 cps. Fig. 12-12 is typical of constant current response at 8″ per second. The response at a tape speed of 4″ per second is shown in Fig. 12-13.

Magnetic Tape Systems

Recording and playback machines designed for magnetic tape fall into two classes, one for home use—the other for broadcasters, etc. In its simplest form the magnetic tape machine is ideally suited for home use. Such a machine is the *Brush* "Soundmirror" BK-401, which we will use as an illustration.

Reference to the schematic diagram (Fig. 12-14), which has been subdivided into various blocks and the block diagram (Fig. 12-15) will permit the reader to understand the functions of the tape recorder. The input amplifier, Section A, utilizes a 6SJ7 tube as a high gain amplifier stage having a grid-to-plate gain in excess of 100. The microphone jack disconnects the radio input circuit when the microphone plug is inserted. When recording, this stage amplifies the signal from microphone or radio inputs and, when playing back, it amplifies the signal from the play head.

Where local transmitters cause interference it is possible that the high gain of the 6SJ7 stage may cause rectification of signals from nearby transmitters. If this condition should exist it may be corrected by connecting a 500 mmfd. mica condenser between the grid and the cathode terminals on the 6SJ7. This connection must be made directly at the tube socket terminals. Also, another 500 mmfd. mica condenser should be inserted between the cathode terminal of the tube and the chassis ground, right at the closest possible position to the tube socket terminal.

The following tube is a type 6SN7. This is the play amplifier stage. Half of the tube is used in the second stage of the amplifier and feeds the phase inverter. When recording, this stage serves as a monitor amplifier. When playing back, it amplifies the signal from the recording medium. This stage includes the play volume control and the frequency compensating circuits for playback. The remaining triode of the 6SN7 tube is the second stage amplifier

which feeds Section E. This stage includes the record volume control as well as the frequency compensating circuits for use in the recording action.

The second record amplifier, Section E, is the final audio stage used during recording and employs a 6SJ7 tube. During recording it supplies the audio signal to the record-reproduce head through the audio coupling condenser. The 30 kc. bias current is introduced in this stage. It is fed to the plate circuit of the 6SJ7 through a coupling condenser and results in a current through the recording head coil which is a mixture (not a modulation) of the 30 kc. bias current and the audio frequency which is being recorded. For proper functioning, the 30 kc. potential across the recording head should range from 60 to 100 volts as measured with an ac vacuum tube voltmeter having a minimum input impedance of 10 megohms.

A visual recording indicator is provided, see Section F, employing a type 6E5 tube. It is used as a volume indicator when recording. It receives an audio voltage from the screen of the 6SJ7 second record-amplifier tube. The screen of the tube is used as the source of this indicating voltage so that the audio voltage present will be the only actuator of the volume indicator. Since the 30 kc. bias current is available in the plate circuit, the plate could not be used as a source of audio voltage alone for the indicator.

The 30 kc. ultrasonic oscillator (Section Y) employs a 6SN7, the first half of which is used in the oscillator circuit. The quality of this tube is critical and only one with a very high reading on a mutual conductance type tube tester should be employed. It may be necessary to interchange this tube with others of the same type to obtain best results. The bias current originated in this oscillator stage is, after proper amplification, used for the erasure as well as the recording bias.

A push-pull erase amplifier is employed (see Section H) using the two triodes of a type 6SN7 tube. These are connected to form a push-pull amplifier which receives its driving signal from Section Y. During the recording operation the plate-to-plate potential in this

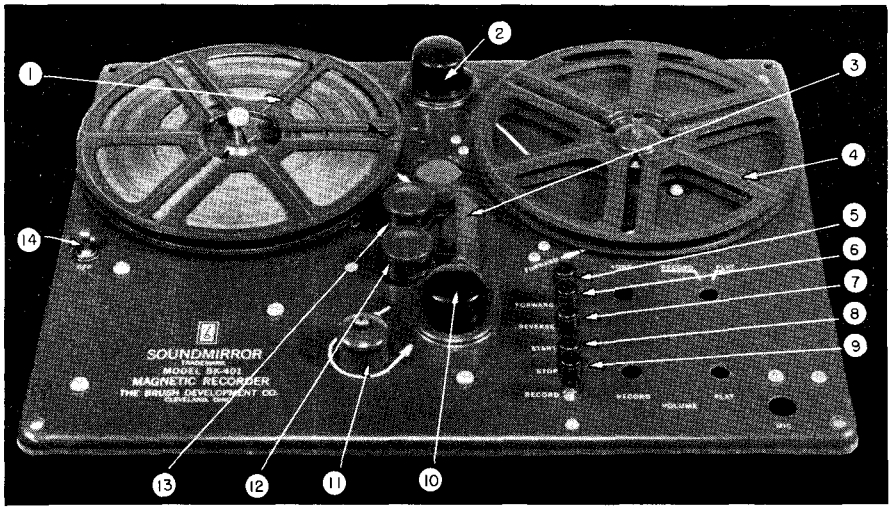

Fig. 12-16. Top view of Brush "Soundmirror" tope recorder. Keyed parts are; (1) Supply reel; (2) Reverse limit switch; (3) Brake shoe for head; (4) Takeup reel; (5) Forward push-bottom; (6) Reverse push-button; (7) Start push-button; (8) Stop push-button; (9) Record push-button; (10) Forward limit switch; (11) Drive capstan; (12) Record-reproduce head; (13) Erase head, and (14) On-off toggle switch.

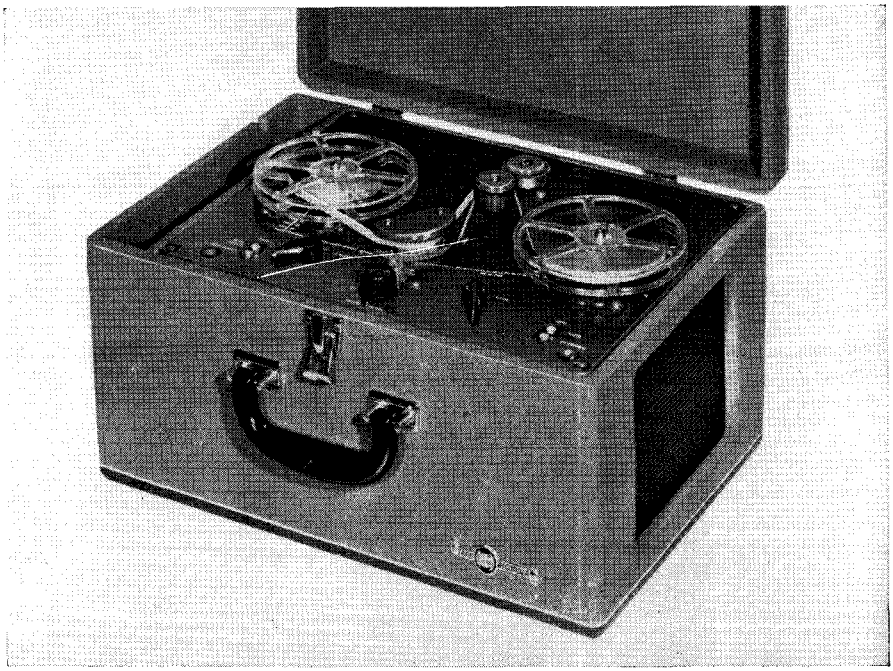

Fig. 12-17. Magnetic Tape Recorder (Eicor) uses dual-track. (Courtesy Eicor, Inc.)

stage ranges between 80 and 100 volts and results in a 30 kc. current through the erase head coil of approximately 20 ma.

A conventional phase inverter stage is utilized (Section J) which provides the signal for the final amplifier stage. Either a 6SL7 or a 6SN7 may be used in the phase inverter position. When a 6SN7 is employed the grid resistor should be 22,000 ohms. If a 6SL7 is used, the same resistor should have a value of 33,000 ohms. It may be desirable, in equipment using the 6SL7, to replace it with a 6SN7 with a proper grid resistor since this substitution may reduce possible microphonics. A "Class A" push-pull audio amplifier stage (Section K) using a type 6SN7 is self-explanatory.

The principal components are shown in Fig. 12-16.

Dual-Track Tape Recording

One of the most logical approaches to obtaining greater recording time on a magnetic media, such as tape, is to utilize the standard ¼" width to include more than one magnetic sound track, as is done in the *Eicor* Model 15 (Fig. 12-17). The record-reproduce head is designed in such a manner that its magnetic gap concentrates on one edge of a standard ¼" tape. Fig. 12-20.

The *Eicor* Model 15 is typical of the many compact, portable, dual track tape recorders now in wide use. The instructions for the operation, test and maintenance of this machine serve admirably to explain the many components of a portable tape recorder, their adjustment and test procedure, and are produced herewith through the courtesy of the manufacturer. The techniques for maintenance apply to similar equipment.

Disassembly of Mechanical Drive Assembly

To remove the recorder from its cabinet, disconnect the line cord and remove the four No. 10 *Phillips* head wood

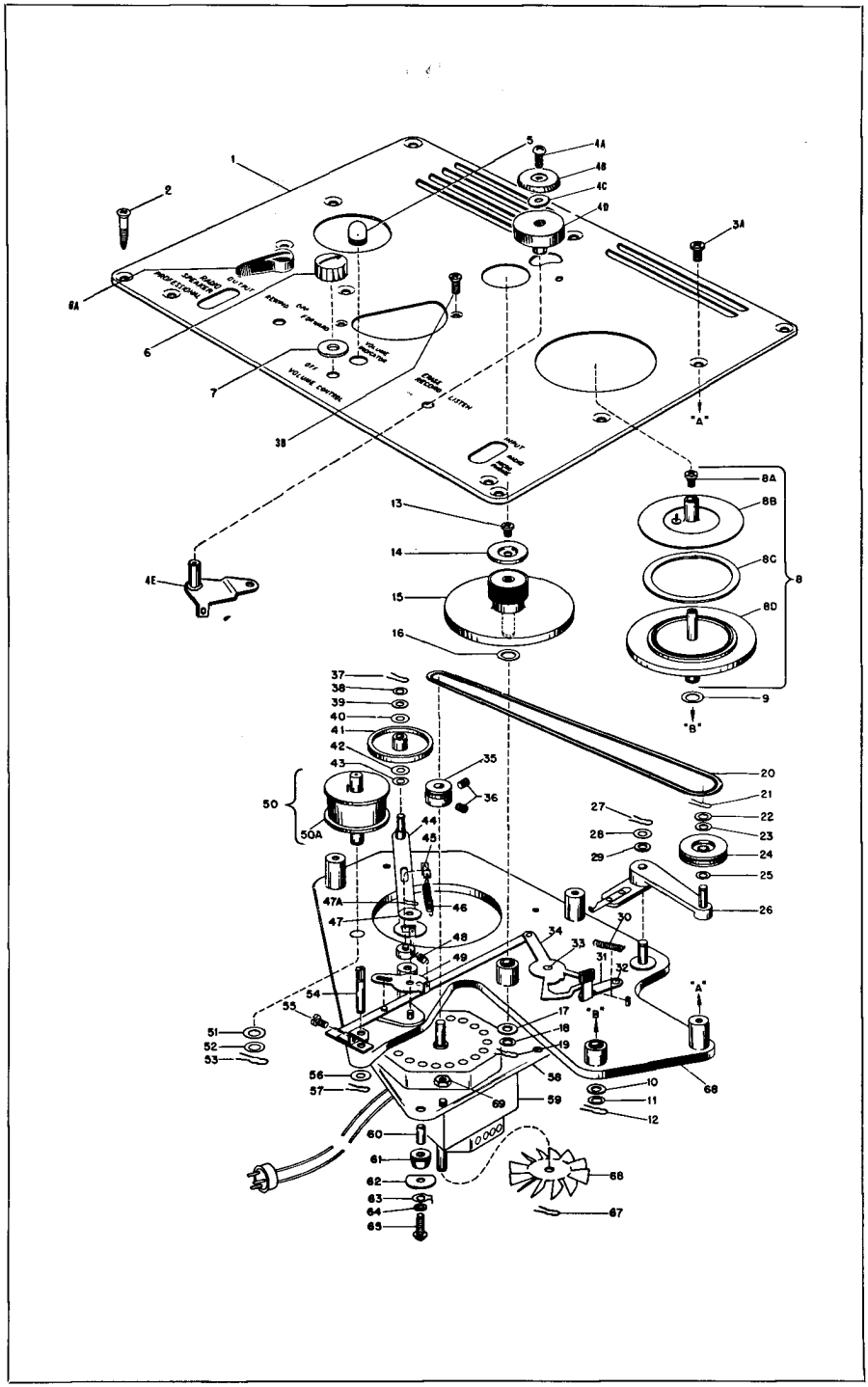

Fig. 12-18. Exploded parts view and mechanical components of the Eicor Model 15 Tape Recorder.

screws (2) at the corners of the panel (1). See Fig. 12-18. Insert a thin-blade screwdriver between the panel and the cabinet and pry upwards enough to slip the fingers under the panel. Lift up enough to permit the speaker plug to be disconnected from the amplifier. The recorder can be removed complete. In handling the recorder out of its cabinet, care must be taken to avoid damage to the fan (66) and the motor shaft. When replacing the recorder, check to be sure the speaker leads, motor leads and the power cord will not be pinched or will not interfere with recorder replacement. To remove the amplifier from the complete recorder, it is necessary to remove the two No. 6-32 *Phillips* head machine screws (4) that attach the recording head to the panel (1). It is suggested that a piece of ¾-inch masking tape be placed over the flanges of the recording head to eliminate scratching or damaging the playing surface during these operations. Remove the three control knobs (6) and their felt washers (7). Disconnect the motor (59). Remove the four No. 10-32 *Phillips* head machine screws (3) that attach the amplifier to the panel (1).

Removing the Mechanical Drive Assembly

After the amplifier chassis has been detached from the recorder, remove the remaining four No. 10-32 *Phillips* head machine screws (3) and the mechanical drive assembly will be exposed. Be careful to protect the fan (66) and the rubber surface of the capstan assembly (15) during these operations.

Replacing the Motor

After the complete recorder has been removed from the cabinet, turn it upside down. Remove the three No. 10-32 round head machine screws (65), three No. 10 lock-washers (64), one lug (63), three special washers (62) and the three grommets (61) that hold the motor mounting plate (58) in place. There is a bushing (60) in each of the three grommets (61). Be careful not to lose them during the disassembly operation. Remove the "O"-ring belt (20) from the motor belt pulley (35). Carefully remove the motor (59) and the motor mounting plate (58) from the mechanical drive assembly. Loosen the two No. 6-32 *Allen* set screws (36) that hold the motor belt pulley (35) on the shaft and remove the pulley. Remove the four No. 10-32 nuts (69) that hold the motor on the motor mounting plate. Lift the mounting plate free of the motor. Reassembly is the reverse of disassembly. However, care must be exercised to assure that the motor belt pulley (35) is reassembled properly on the shaft to prevent the belt from rotating about the center of a cross section. The top of the motor belt pulley (35) should be approximately 5/64-inch above the top panel mounting posts on the mechanical drive base. All tubes used in this recorder are standard. However, *General Electric* 6SJ7, or equivalent, should be used because of their low noise level. To replace the volume indicator bulb, it is necessary to remove the amplifier chassis from the recorder. Before replacing the recording head be sure that you have isolated the trouble and have diagnosed it as a faulty head. The head cannot be repaired satisfactorily. It is extremely delicate and impregnated in wax.

Removing the Recording Head

With the amplifier removed from the recorder assembly, loosen the bolt that holds the phosphor bronze strip—from the recording head—onto the amplifier chassis. This will allow sufficient head movement to permit connecting the leads.

To Replace a Capstan

After the amplifier and mechanical drive assembly have been removed from the panel (1), the capstan may be replaced by removing the spring retainer (19), the bakelite washer (18) and the felt washer (17) from the bottom of the shaft. Slip the capstan (15)—complete with the capstan cover (14) secured with a No. 4-40 *Phillips* head machine screw (13)—from its bearing. As the capstan

is removed, note the bakelite washer (16) between it and the bearing. Before replacing the capstan with a new one, put a few drops of *Kensington* No. 9 Spindle Oil on the shaft. Attach the capstan cover (14) to the new capstan (15) with a No. 4-40 *Phillips* head machine screw (13). Replace the bakelite washer (16) on the capstan shaft and insert the shaft in its bearing. On the bottom of the shaft—and in order—replace the felt washer (17), the bakelite washer (18) and the spring retainer (19). Check capstan end play. It should be between .010 and 1/32 inches.

To Replace the Belt

To replace the "O"-ring belt (20), loosen the four *Phillips* head machine screws (3) that attach the panel (1) to the mechanical drive assembly enough to permit clearance for a new belt.

To Replace Idler Wheel

After separating the mechanical drive assembly and the motor from the rest of the recorder, remove the motor belt pulley (35), the spring retainer (37), the felt washer (38), the bakelite washer (39) and the fishpaper washer (40)—from the top of the idler wheel (41)—and the fishpaper washer (42) and the bakelite washer (43) from under the wheel. When replacing the amplifier, be sure that the recording head is drawn through the panel carefully to prevent damage. Also see that the motor is reconnected. Allow no oil to touch the idler wheel's friction surface.

Be sure that all parts removed are replaced in their correct order when reassembling a new idler wheel.

Inspection of Recorder

1. Visually inspect the alignment of the cam on the "Reverse-Off-Forward" shaft and erase interlock switch. The cam should strike within 1/16 inch of center on the ¼ inch wide switch blade.

2. Move the tape through the machine, first in the forward direction and then in the rewind direction. The tape should pass midway between the flanges of the reel which is receiving the tape. Change shims under the head if necessary to achieve this.

3. With the recorder out of the cabinet and the motor running, orient the power transformer for minimum audible hum from the speaker. Tighten the four transformer mounting screws.

4. When placing the recorder in the cabinet, check for bent fan and for paths of speaker leads, motor leads, and power cord which will not cause trouble.

5. Using paper base black oxide tape, make microphone voice recordings at various volume control settings, including a recording of loud talking close to the mike with the volume control at maximum gain. Upon playback, the best recording should be that with the neon bulb flashing only on the louder syllables. Erase the portion of tape having overloaded recording. No trace of the recording should remain.

6. With the mechanical control in the "off" position and the record-listen switch in the "listen" position, turn the volume control to maximum gain. Connect a VTVM to the "Professional" output jack. The voltage should not exceed .6 volts.

7. Feed a 100 cycle tone from an audio oscillator into the "Radio" jack. Make a recording with the volume control set just below the flash point of the neon lamp. Also, make recordings at 1000 cycles and 3500 cycles without changing any controls except the frequency controls on the oscillator. During playback connect a voltmeter to the "Professional" jack. The voltage of the 100 cycle tone should be within ±2 db. of the 1000 cycle tone, and the 3500 cycle tone should not be more than 6 db. lower than the 1000 cycle tone. Listen for pitch varations mechanical buzzes, etc.

8. Make a music recording from a disc or other source. Play back and listen for over-all quality.

9. Check for easy operation of controls.

Inspection of the Mechanical Drive Assembly

1. With the control shaft in the "off"

position, the clearance between the motor shaft and the idler roller should be 1/32 inch ±1/64 inch. If this tolerance is not met, parts inspection should be made to determine the cause.

2. With the control shaft in the "rewind" position, manually turn the rewind drum counterclockwise. The idler should turn the motor shaft. If this does not occur, check for binds, oil on friction surfaces, incorrect spring tensions, etc.

3. With the control shaft in the "forward" position, manually turn the capstan drum clockwise. The idler should turn the motor shaft. Check for flaws as in the preceding paragraph if this does not occur.

4. The top of the motor belt pulley should be 5/64 inch above the top of the posts which will secure the mechanism to the top plate. Position the pulley on the motor shaft to meet this requirement and tighten the set screws.

5. When the motor pulley has been positioned as in paragraph 4, there should be at least 1/32 inch clearance between the bottom of the motor pulley and the top of the idler roller. Check for bent parts or incorrect assembly of parts if this requirement is not met.

6. Check end play of the rewind drum, capstan drum and take-up drum. Each should have some end play, not more than 1/32 inch. Correct assembly of washers on these shafts should control this.

7. With the motor running and the control shaft in the "off" position, observe the belt. The same portion of the belt surface should run in the pulley grooves at all times, that is, the belt should not rotate about the center of a cross section. If such rotation does occur, the right hand belt pulley is not correctly located.

8. With the motor running and the control shaft in the "off" position there should be at least 1/32 inch clearance between belt and take-up drum. Move the control shaft slowly toward the forward position. The capstan should start to rotate before the belt contacts the take-up drum.

9. When the control shaft is in the "rewind" position, there should be at least 1/32 inch clearance between the rubber on the brake and the take-up drum. With the motor running, move the control shaft slowly from "rewind" to "off." Meanwhile, rotate the take-up drum manually. The brake should contact the take-up drum before the rewind drum stops rotating. Bend the brake arm to meet these requirements.

10. Place a full 5 inch reel of tape (or equivalent dummy) on the take-up shaft and run the machine with the control shaft in the "forward" position. Measure the tape tension required to hold the tape reel stationary. This tension should be 1 to 2 ounces. This tension should be measured after the machine has been running with the clutch slipping for at least one minute. The tension is controlled by the type and amount of lubricant used on the felt washer.

11. Place a full 5 inch reel of tape (or equivalent dummy) on the rewind and measure the tape tension required to pull tape off the reel. The tension should be ⅜ to ¾ ounce. The tension is controlled by the type and amount of lubricant used on the felt washer.

12. Mount a top plate on the assembly. Mount a head assembly to the top plate. Using a 7 inch reel of tape and an empty 7 inch reel, thread the tape as for playing and observe the passage of the tape between the reel flanges on forward drive and on rewind. The tape should be centered between the reel flanges, and the clearance between reel flanges and top plate should be ⅛ inch around the entire reel periphery. If the clearance varies around the reel periphery, it will be necessary to replace defective parts.

13. When threaded as for playing, and when powered by 115 volts 60 cycles, the unit should start rewinding when switched from "off" to "rewind" with an almost full 7 inch reel on the rewind drum and only a dozen or so turns of tape on the take-up reel. Failure to start may be due to weak motor or friction in the bearings of the capstan or take-up drum.

14. Make two marks 75 inches apart near one end of a 7 inch reel of tape. Time this length of tape under two conditions, (1) full reel on the rewind drum, and, (2) full reel on the take-up drum. The time in both cases should be 10 seconds ±0.2 seconds.

15. Connect an amplifier to the recording head and play back a previously-recorded 1000 cycle recording. Listen for pitch fluctuations. Correlate the rate of any severe fluctuations with the rotation period of capstan, or idler roller or motor. Replace defective parts to achieve a steady note.

Amplifier (with Head)
Performance Test Procedure

Preliminary Inspection.

Check the following points:

1. Tubes in correct sockets and fully seated.
2. No loose wires, solder or other parts inside chassis.
3. Volume control "feel" and switch operation.
4. Selector switch "feel" and operation.
5. Gap on leaf switch—should be 1/32 inch.
6. Seating of four chassis clip nuts.

Voltage Checks.

Connect line cord to 117 volt, 60 cycle (ac) power source. Turn volume control switch to "on" and selector switch to "record." Check the following voltages:

1. Ac filament: 6.2 volts (ac) ±0.1 volt.
2. Input filter section: Connect between chassis and condenser lug marked with square symbol. Voltage to be 300 volts (dc) ±15 volts.
3. Output filter section: Connect between chassis and condenser lug marked with triangle symbol. Voltage to be 255 volts (dc) ±20 volts.
4. Decoupling filter: Connect between condenser lug and chassis. Voltage to be 230 volts (dc) ±20 volts.

Additional voltages to be checked if chassis performance in tests below is abnormal:

1. First 6SJ7: No. 8 pin to chassis—108 volts ±10 volts; No. 6 pin to chassis —19 volts ±2 volts; No. 5 pin to chassis —.055 volts ±0.06 volts.
2. Second 6SJ7: No. 8 pin to chassis —50 volts ±5 volts; No. 6 pin to chassis —20 volts ±2 volts; No. 5 pin to chassis —0.7 volts ±0.07 volts.
3. 6K6GT: No. 3 pin to chassis—245 volts ±25 volts; No. 4 pin to chassis—255 volts ± 20 volts; No. 8 pin to chassis—15.8 volts ±1 volt.

Refer to wiring diagram (Fig. 12-19) for voltages at other points.

Performance Check.

Plug in test speaker, turn volume control to maximum and set switch to play position.

1. Tap first and second 6SJ7 tube envelopes with pad of forefinger. Microphonism to be less than 5 db. with light tapping. No sustained "ringing" or "singing" tone to be present.
2. Strike chassis ends, sides and switch bracket sharply with light rubber mallet. No clicking, sputtering or frying noises to emanate from speaker.
3. Adjust signal source frequency to 100 cycles and level to 1 millivolt. Turn volume control on chassis to maximum. Turn selector switch to record position and read output voltage on meter (100 volt scale). Reading must fall between 20 and 30 volts rms.
4. Switch signal source to 1000 cycles with level at 1 millivolt. Output voltage should fall from 5 to 7 db. below the reading obtained above.
5. Switch signal source to 3500 cycles at 1 millivolt. Output voltage should fall from 5 to 7 db. below the reading obtained at 100 cycles.
6. Connect VTVM from 100 ohm resistor (on left end of selector switch bank) to chassis by means of clips on test lead. "Hot" lead of meter must be connected to resistor lead on terminal No. 17 of switch. Adjust signal source frequency to 100 cycles and level to 10 millivolts. Adjust volume control to point where neon indicator just flashes. Read voltage. Switch frequency to 1000 cycles and read voltage. Reading should be

from 5 to 7 db. below that obtained above. Change frequency to 7000 cycles and read voltage. Reading should be 3 to 5 db. below than that obtained with 1000 cycle signal.

Recording Indicator Check

Apply 100 cycle 1 millivolt signal to microphone jack and adjust volume control to point where neon indicator just flashes. Output voltage must be 11 to 15 volts.

Hum Test

With selector switch set in play position and volume control set at maximum, read hum voltage at the "Professional" jack. Rotate power transformer to null

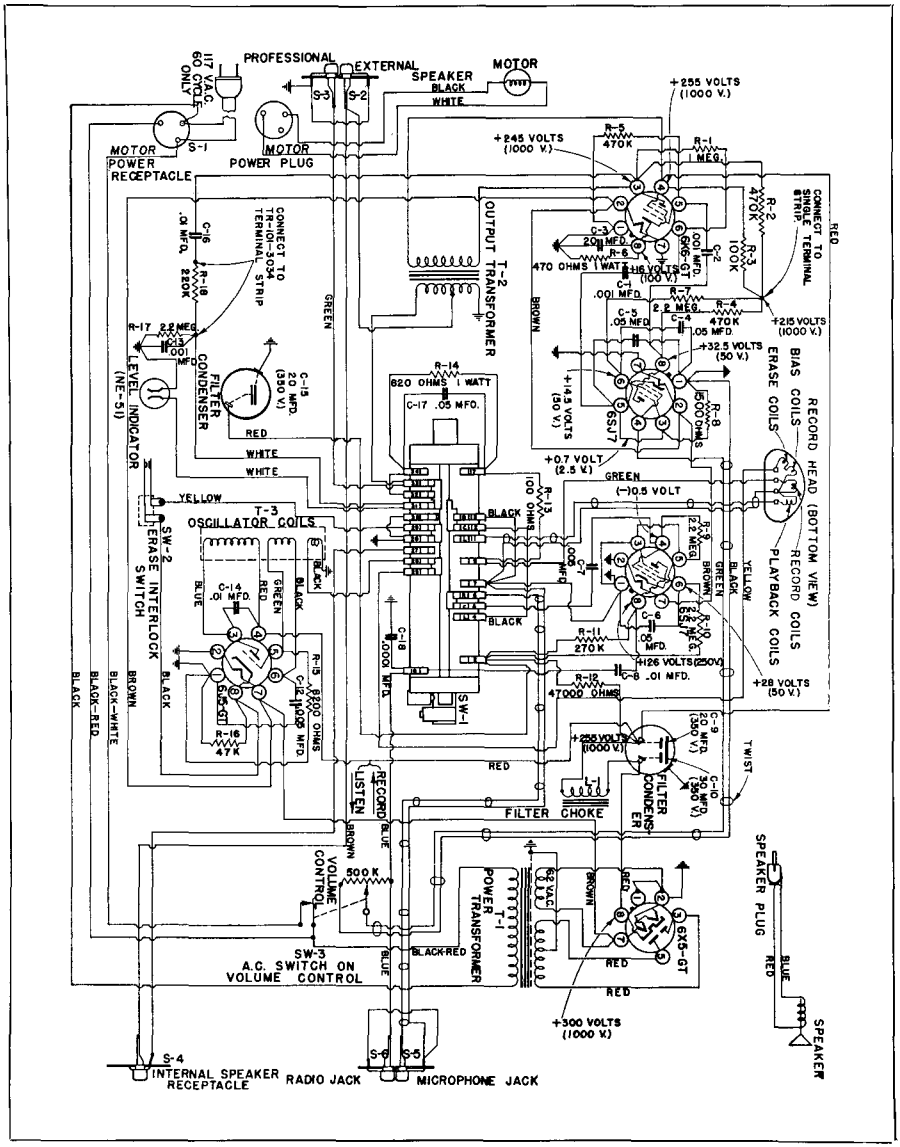

Fig. 12-19. Complete schematic of the Eicor Model 15 Tape Recorder.

OPERATIONAL FAILURES

Trouble	Causes
1. Failure to Erase	Check head windings for open or shorted coils. Check playing surfaces for dirt or other foreign material which would prevent close contact of the tape to the pickup surface. Check position of the head to be sure the tape is running over correct surfaces. Check the head for possible excessive wear of the pickup surface. Check the operation of SW-2, erase interlock switch.
2. Faulty Play-Back	See above. Complete check of amplifier circuits, tubes, etc.
3. Wows	Check capstan for excessive run-out. Check the idler for worn or uneven surface. Check for low line voltage. Check for sticky tape or foreign material on the pickup surface. Check for tape width and be sure that it is not binding in the guides. Check for distorted reels or any other friction which might cause an excessive load on the motor or drive assembly.

SPECIFICATIONS

Size.....9″ High—16″ Long—12″ Wide
Weight.....27 lbs. Complete
Frequency Range.....Approx. 80-7500 cycles
Forward Speed.....7½″ or 3¾″ per second
Re-Wind Speed.....6 to 1
Amplifier.....5 tube, ac (inc. Separate Oscillator Tube)
Microphone.....Sensitive Crystal
Recording Head.....Duo-Channel—Double Track Low Impedance
Tape Capacity.....2 Hours
Power Supply: 115 volts, 60 cycles
Power Consumption: 80 watts
Power Output: 2 watts
Audio Power: 6K6GT
Erase-Bias Oscillator: 6J5 GT
Power Rectifier: 6X5 GT
Audio Voltage Amplifier: 6SJ7
Neon Amplifier Lamp: *General Electric* No. NE-51
Speaker: Impedance 3.2 ohms

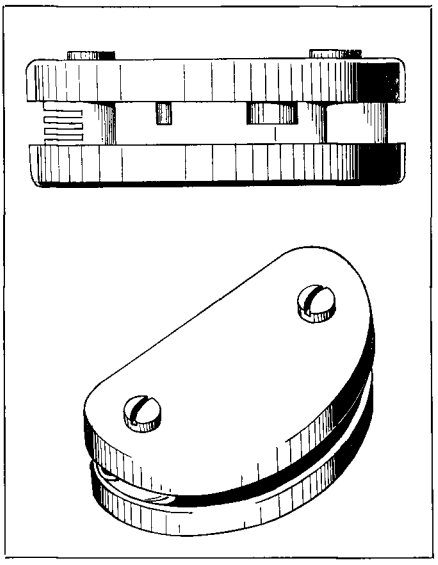

Fig. 12-20. Details of the dual track record-reproduce head.

hum voltage. At null point hum voltage reading must be less than 0.32 volts rms. Tighten transformer screws with transformer in this position. Head should be in relative position it will assume when amplifier is assembled to mechanism.

Bias Oscillator Test

1. Connect rf ammeter across terminals of blade switch. Turn selector switch to record position and read ammeter. Reading must fall between 0.9 amperes and 1.1 amperes.

2. Connect oscilloscope vertical amplifier leads to yellow blade switch lead and chassis. Connect audio generator to horizontal sweep input and adjust audio generator frequency until stationary ellipse is obtained on oscilloscope screen with blade switch closed. Audio generator frequency must be between 30 kc. and 33 kc. when stationary ellipse is obtained.

Lubrication Instructions

Extreme care must be taken when lubricating the recorder and player. Serious damage will result if the unit is lubricated excessively. For satisfactory operation, the instructions in this section must be followed.

1. Mechanical linkages should be lubricated lightly at points of friction with *Sta-Put* No. 18-H.

2. The shafts of rotating parts, when replaced, should be wiped clean with a lint-free cloth or paper and oiled lightly with *Kensington* No. 9 Spindle Oil. Use two or three drops!

3. When lubricating the felt washers on the take-up and rewind drum, use *Sta-Put* Oil No. 360. Saturate the felt washers and then remove as much of the oil as possible by pressing a cloth or absorbent paper against them.

PROFESSIONAL MAGNETIC TAPE RECORDERS

Audio engineers have set a fast pace in the development of precision equipment for broadcast and reproduction, using magnetic tape. The large motion picture companies are rapidly adopting this medium, especially for "remote" sound locations. As in the case of disc machines, the magnetic tape machine must meet exacting specifications to be suited to split-second timing, essential for program purposes.

It is vitally important that the audio engineer fully understand the construction and proper application of his equipment if optimum results are to be had from magnetic tape. There are, at this writing, many precision-made tape machines. Representative equipment for professional use are described in following paragraphs and will serve as a ready reference and a comparison of several tape transport mechanisms and associated amplifiers.

Design and Essential Specifications

In the design of magnetic tape recording and reproducing equipment, the mechanical and magnetic characteristics of the recording medium must be thoroughly considered. It is the purpose of this discussion to show how these characteristics relate to recorder design and to explain the relation of tape properties

and machine characteristics to the final result obtained from a recording system.[1]

In any measurement of the magnetic characteristics of magnetic materials, a hysteresis loop is perhaps the most universally used parameter. Instruments have been developed which will automatically trace, on a cathode ray oscilloscope, the hysteresis loop for a sample of ferromagnetic material. Further improvements of this equipment have been made to permit the testing of relatively small quantities of magnetic material, such as are normally found on the standard ¼″ wide magnetic tapes. Such instruments make it possible to quickly measure the two fundamental properties of the magnetic material—coercive force and remanence.

Both coercive force and remanence must be held to specific production tolerances in order to insure consistent performance of the tape in a recording system. Since the coercive force is, to some degree, a measure of the tape's ability to retain a given magnetic flux, it bears a direct relation to the magnetizing force required to record or erase a signal. Magnetic tapes having very high coercive forces require large amounts of bias and erase current, which in turn introduces problems of heat dissipation in the erase head. Coercive force is also related, in a complex fashion, to the apparent frequency response of the recording system at different audio frequencies. It directly relates to the wavelength of the recorded signal on the tape, and therefore is a factor which the recording equipment manufacturer must consider in determining the maximum frequency response of his equipment for a given tape speed. In general, the higher coercive force materials may be recorded with less pre or post equalization of the high frequencies required to obtain an overall flat frequency response. It is therefore apparent that the coercive force should be some median value which is high enough to give satisfactory output at the high audio frequencies without posing problems of erasure.

The German *Magnetophone* recorders operated at a basic tape speed of 77 centimeters or 30″ per second and had a frequency response flat to about 10,000 cycles. The shortest wavelength of the recorded signal was therefore .003 inches and tapes having fairly low coercive force in the region of 75 to 125 oersteds were capable of giving satisfactory performance. Similar tapes have been manufactured and used in this country on machines operating at the 30″ per second speed. It has been determined that such tape is not satisfactory for use with equipment which is designed to meet the present NARTB standard of essentially flat response from 50 to 15,000 cycles at a tape speed of 15″ per second. For this application, magnetic tape having a coercive force of from 225 to 250 oersteds is most desirable, and a commercial tape having a coercive force of approximately 240 oersteds is being produced in considerable quantities for broadcast and professional use.

It is obvious that recording at a 15″ per second tape speed has considerable advantages both economically and from the standpoint of tape storage as contrasted with operation at the German standard of 30″ per second. For home recording equipment, where economy dictates the lowest possible tape speed, tapes having a coercive force in the range from 300 to 350 oersteds have been used in systems operating at a tape speed as low as 3¾″ per second. Such machines, operated on a dual track basis, are capable of recording one full hour on a 5″ reel of tape with resonable fidelity.

Remanence is a measure of the amount of magnetic flux left on the tape by a given recording signal. As a tape property, the value of remanence should be as high as possible consistent with low distortion, since greater remanence means more signal and therefore a better ratio of signal-to-system noise. For tape of a

[1]From a paper "Properties of Magnetic Tape and Their Relation to Magnetic Recording" by Reynolds Marchant, Development Engineer, Minnesota Mining & Manufacturing Co.

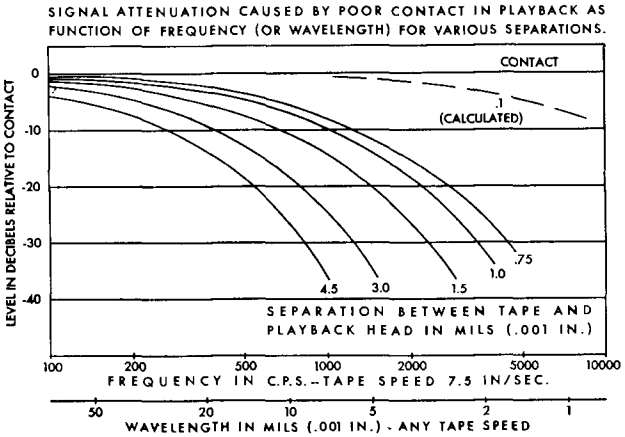

Fig. 12-21.

given coercive force, the remanence and the thickness of the coated magnetic layer are also related to the relative signal output at high and low audio frequencies. Quality control by one tape manufacturer utilizes a routine test procedure whereby the output at 500 cycles is compared with that at 5000 cycles at a tape speed of 7½″ per second. The absolute value of output at 500 cycles is also used as a measure of the variation in output from lot to lot of tape. Control of the remanence value within established limits is necessary in order to avoid problems of changing level when two lots of tape are spliced into the same reel.

It should also be borne in mind that the problem of differences in recording level are problems of machine design, as well as tape design. If tapes recorded on several different machines are spliced together to make up a program, changes in level of the recorded signal may be expected unless all machines impress the same signal on the tape with the same vu meter reading. It is probable that machines made by the same manufacturer will record at the same level, but it is quite possible that tapes made on different machines will not be properly related to each other.

A concerted effort has been made by the members of the NARTB Magnetic Tape Committee to standardize the playback characteristics of various commercial machines. Undoubtedly a standard recording level will be adopted. Preliminary reports indicate that several different machine manufacturers, all using the same type of magnetic tape, are already in very close agreement in playback characteristics, so it appears that practical interchangeability of recordings made on the same type tape is virtually assured.

The character of dispersion of the magnetic material on the coated tape and the uniformity of magnetic particle size, both affect the residual noise left on the tape in the recording process. Proper control of these factors assures a background noise from the tape which is comparable with the general system noise in a well designed playback amplifier system. The surface of the magnetic coating must be smooth and flat so that intimate contact of the tape with the head is maintained at all times. Irregularities of the tape surface would tend to change the spacing of the head gap from the tape with a resulting amplitude flutter of the higher frequency components of the audio signal. Since in most recording equipment the recording and playback heads are cylindrical in shape, reliance is placed on tension of the tape to maintain contact with the head. It is important therefore that the tape tension be carefully controlled so that uniform contact with the magnetic head is assured. Rapidly fluctu-

ating tape tensions will produce not only objectionable amplitude modulation, but very serious frequency modulation of the recorded signal. Some average tension variation from beginning to end of a reel of tape is acceptable since good head conformity can be obtained over a 2 to 1 tension range. (See Fig. 12-21.)

The physical properties of a magnetic tape are also of considerable importance to the behavior of the recording system. Most of the magnetic tapes produced and used today are composed of a coating of the magnetizable material on a stable, non-metallic backing. Backings commercially used are made of organic materials and may be of a fibrous type such as paper or of a continuous film type, a typical example of which is cellulose acetate film. An ideal backing would be one which had infinitesimal thickness and an infinite modulus of elasticity. Such an ideal backing would then have no stretch, but at the same time have a high degree of flexibility.

Since we must obviously deal with practical materials, and since performance must be balanced against cost, for a commercial product, certain compromises with an ideal backing must be made. In this country the choice of cellulose acetate as a backing material appears quite logical and such material is used in the commercial production of magnetic tape for broadcast and professional work. Cellulose acetate has long been used as the "safety" base material for home movie film where its aging properties and its stability under varying conditions of temperature and humidity have been thoroughly evaluated. Since its performance has been studied over a period of years and since it has reasonable mechanical strength in the thickness desired for magnetic tape, it has found wide acceptance.

Since magnetic tape must be subjected to a certain amount of tension during the recording operation, it must necessarily experience a certain degree of elongation. If this elongation is constant in the recording and playback operations, the recorded signal will be reproduced without alteration with respect to time. Variations in tape thickness would cause corresponding variations in elongation of the tape at a given tension, and while such tape might give consistent performance when recorded and played on the same machine, recordings made on a machine of one type and played back on a machine of a different type would be subject to appreciable frequency modulation due to the changing elongation. It can readily be seen, therefore, that thickness variations should be reduced to a minimum, a condition which is satisfactorily accomplished in present commercial practice.

On most recording machines, the tape is dragged across several stationary surfaces including the erase, record and playback heads. Because of this treatment, the coefficient of friction between the tape and the stationary surfaces should be reasonably low. If such is not the case, the tape will not have a uniform tension throughout its path of travel to the capstan as the tension will build up from friction point to friction point. An appreciable increase in tension may be produced by the time the tape reaches the playback head (usually the last element in the head line-up) and this tension will cause the playback head to wear at a rapid rate. A high degree of friction also results in a certain amount of chatter of the tape passing over the head. This chatter becomes audible, in some cases, as a squeal which may appear both as mechanical noise and as a modulation of the signal on the tape. This type of modulation can become very objectionable and can ruin an otherwise satisfactory recording. For this reason, the coefficient of friction should be held to as low a value as is possible, consistent with adequate traction at the capstan. Satisfactory tape should have no appreciable tendency to stick to itself when wound up in a tight roll. NARTB standards have been set up for this and other mechanical properties. These standards are successfully met by commercially available tape.

Referring again to the recording equipment as a part of the entire system,

it must be recognized that the recorder design should be correlated with the mechanical properties of the tape. Recording equipment designed to permit rapid forward or rewind motion of the tape should be capable of accelerating the tape to a running speed or braking the reels to a quick stop without subjecting the tape to momentary stresses of high value, since such stresses may produce elongation of a permanent nature. Rewinding of plastic back magnetic tape is preferably done at constant torque so that the tape tension decreases as the reel becomes larger, however, some compromise between constant torque and constant tension will usually give satisfactory results. Most of the tape recorder manufacturers, making equipment for broadcast station use, and described in this chapter, have designed mechanisms to drive the tape at either the standard NARTB speed of 15″ per second or the secondary speed of 7.5″ per second permitting flexibility of operation and maximum economy in use of tape. The NARTB Magnetic Tape Committee has recently adopted use of a standard hub for magnetic tape reels. Tape is supplied by the tape manufacturer on this standard hub. A suitable flange, or flanges, can be attached to this hub to permit use of the tape on any professional recording equipment. Tape made on one recorder can thus be readily adapted to use on another type of machine with no necessity for rewinding the tape.

On a magnetic recorder, the playback head must be very carefully aligned with the magnetic image produced by the record head in order to insure proper reproduction of the recorded signal. The recorded magnetic image on the tape must also be oriented exactly perpendicular to the direction of tape travel if tapes are to be interchangeably recorded and played on different machines. A small degree of misalignment of the playback head with the recorded signal will cause a serious reduction in output at the higher frequencies. Recorders are usually furnished by the manufacturer with the record and playback heads properly aligned, both with respect to each other and with respect to the tape travel. Provision is made, however, on all machines for adjustment of the heads in the field.

Minnesota Mining has made available to the trade a standard head alignment tape which will enable adjustment of the heads to be made to within ±1½ minutes of arc at a wavelength of .001″ which corresponds to 15,000 cycles at 15 inches per second. A head misalignment of 10 minutes of arc will cause a 6 db. reduction in output at the 15,000 cycle point. This effect is less serious at lower frequencies amounting to about 4 db. at 10,000 cycles under the above conditions. A paper on this subject was published by *Murphy and Smith* in the January, 1949 issue of *Audio Engineering*. It is recommended that regular checks using a standard head alignment tape be made as part of the station routine checking procedure. It is particularly important that portable equipment be checked in this manner. All of the professional recorders produced in this country are driven by synchronous motors so that the speed of the tape should be independent of line voltage fluctuations; however, if the recorder has been designed to use the full rated power of the drive motor at rated voltage, serious speed variations may occur at lower line voltages since some types of synchronous motors, when operated at reduced voltage, will lose synchronism and run as straight induction motors.

Large variations in line voltage may have even more serious effects on the performance of the rest of the system. Optimum recorder design utilizes voltage regulator tubes to stabilize the voltage supply to the amplifier and bias oscillator tubes. Such regulator tubes usually have a fairly critical regulating range and abnormally low line voltages will often result in loss of control of the regulator tubes and serious reduction in supply voltage to the bias oscillator. Line voltages varying from 95 to 125 volts are commonly encountered in field use and can produce a bias current change greater than 2 to 1. A bias change of this magnitude can produce a serious altera-

tion in high frequency response and may have a marked influence on the amount of harmonic distortion produced. In studio work it is recommended that an adjustable voltage transformer be used to correct normally high or low line voltages to the value recommended by the recording equipment manufacturer. For use in the field, an adjustable voltage source such as a *Variac,* together with a suitable meter, will insure against loss of quality due to line voltage abnormalties.

Recorders which employ slipping friction clutches to control the tape tension are subject to variations in performance due to wear or contamination of the friction surfaces. Satisfactory checks of such equipment can usually be made with a small spring scale which can be tied to the free end of tape on a full tape reel. A suitable spring scale having a maximum capacity of 16-oz. can be obtained from a scientific equipment supplier at nominal cost. In use, the reel can be placed on a friction driven winder spindle and the stalled tension thus measured. Tape can be pulled off the reel at a slow rate by means of the spring scale when the reel is placed on a stationary unwind spindle. Data on the proper tape tensions can be obtained from the machine manufacturer.

Wear on both the record and playback heads may be expected, although most recorders are designed so that a minimum life of several hundred hours is obtained. The effects of wear on a record head are rather complex. One effect is to reduce the cross-section area of the magnetic material at the pole tips so that saturation of the magnetic material at this point results. Such saturation may have two secondary effects. First, that of spreading the recording flux over a wider area, and second, the introduction of third harmonic distortion in the recorded signal. The net effect of spreading the recording flux would be to introduce a loss of signal at the higher frequencies. Where appreciable wear can be visibly noted, a new record head should be installed. The worn heads should then be returned to the manufacturer for examination. A record head may be checked in the field by high power microscope examination of the magnetic pattern recorded on the tape. This pattern can be made visible by the technique described in the literature[2] by *Murphy and Smith.* Such technique requires equipment not generally available in the broadcast studio and interpretation by an experienced observer is required.

Wear of the playback head is most serious when such wear produces an increase in width of the air gap. Comparison of the gap of a new head with that of the worn head, when the two heads are observed under a medium power microscope, will reveal significant changes in gap width. A frequency response curve run on the recorder with new and old playback heads is perhaps the simplest technique that can be employed by the station engineer to check playback head wear.

Magnetic tapes produced several years ago in this country often showed a high degree of rub-off of the magnetic material. This material, removed from the tape, would accumulate on a record or playback head to such a degree as to force the tape away from contact with the head. Signal attenuation also results from poor contact, Fig. 12-22. Improvements in tape manufacturing techniques have resulted in the production of tapes which are relatively free from this trouble. Periodic cleaning of the heads with a non-inflammable solvent such as carbon tetrachloride is still recommended as a routine procedure to remove lint, dirt or any other foreign matter which may accumulate on the head surfaces.

As previously mentioned, the remanent noise on a well erased tape is usually on the order of the amplifier system noise. Lack of symmetry in the bias oscillator waveform may cause a large increase in the apparent background noise of the tape. The introduction of relatively small amounts of even order har-

[2]"Alignment of Magnetic Recording Heads," Audio Engineering, Jan. 1949.

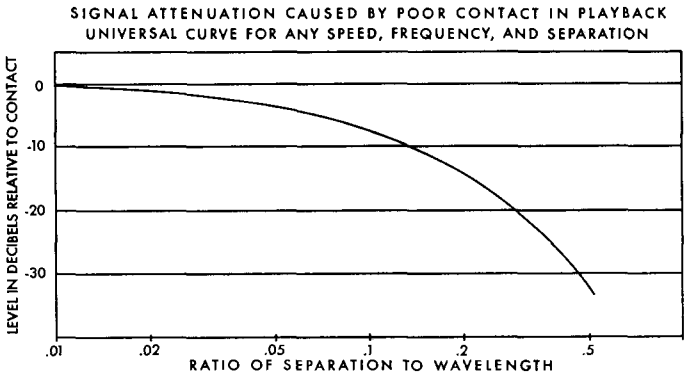

Fig. 12-22.

monics in the bias or erase waveform will seriously affect the signal-to-noise ratio of the system. Remanent magnetization of either the record or playback head will also raise the background noise level to a high degree. If the signal-to-noise ratio in the magnetic recording system is less than that which could normally be expected, and the tape noise is appreciably greater than the amplifier system noise, the possibility of remanent magnetism in the heads should be investigated. A procedure for demagnetizing the heads is usually described by the recorder manufacturer in his operating instructions for the equipment.

Record and erase heads can usually be demagnetized by the momentary application of a 60-cycle current having a maximum value of from 2 to 3 times that of the bias current normally supplied to the head. The current should be applied and reduced gradually by an essentially stepless variable voltage transformer such as a *Variac,* the current being slowly raised from zero to the maximum value and returned to zero over a period of from 5 to 10 seconds. This same technique may be applied to the playback head but care must be taken not to apply a current of such magnitude as to injure the winding.

Brief mention may be made at this time of the most advantageous storage conditions for magnetic tape. In general, the same factors apply as normally apply to the storage of safety base movie film. Extremes of temperature and humidity should be avoided. Ideal storage conditions would be in the temperature range of 60 to 70 degrees F. at a relative humidity of 40 to 50%. For maximum life in long time storage, rapid and frequent changes in humidity and temperature are undesirable. Storage of plastic back tape in a basement in the summer time where the relative humidity may reach a value of 90 to 95% should be particularly avoided. Prolonged storage in areas where sunlight or heat radiators may hold the temperature above 110 degrees F. will promote embrittlement of most plastic materials.

Since magnetic tape is a magnetizable medium, whose magnetic state can be altered by a magnetic field, signals may be altered or impressed on the tape by strong magnetic fields existing outside of the recording equipment. Stray fields of this nature are usually held to a minimum in well designed broadcast station control rooms and studios. It is highly improbable that stray magnetic fields may be encountered which would completely saturate magnetic tape, but fields of lesser magnitude produced either by a large current in an electrical conductor or by permanent magnets may cause partial erasure of a recorded tape or impose an appreciable amount of background noise on the already recorded signal. A strong magnetic field may also cause transfer of a strong signal in one layer of tape to an unrecorded area in

an adjacent tape layer. Instances have been reported of erasure of tape by the strong magnetic field of a street, railway car or trolley bus when the tape was inadvertently placed near a hidden conductor in the wall of the vehicle. Relatively few instances of trouble of this kind have been reported, so from a practical standpoint it appears that the problem is not a serious one. Some measure of protection from stray magnetic fields is afforded by shipping tape records in standard movie film cans made of pressed steel. The added measure of protection afforded by such a container might well justify the extra shipping expense involved.

It has been shown that proper performance of both the tape and the recording equipment is necessary in the satisfactory operation of a magnetic recording system. Failure of either element of this system can produce unsatisfactory results. Advancements in the art of both tape production and recorder design now make possible the consistent operation of tape recording equipment of wide frequency range and high fidelity. Standardization in the art may soon permit complete interchange of tape records made on any equipment.

RCA PROFESSIONAL MAGNETIC TAPE RECORDER

The new *RCA* Type RT-11A Magnetic Tape Recorder provides a professional unit suitable for all sizes of broadcast stations and recording studios for recording rehearsals, auditions, or any type of studio program for delayed broadcasts, commercial accounts, or reference. Design features of the new equipment include fingertip push-button controls, all of which may be extended to a remote position, and self-centering snap-on hub adaptors which assure perfect reel alignment with either RTMA or NARTB reels. The recorder meets exacting broadcasting requirements in accurate timing, low wow and flutter, and quick starting.

Description

The overall design of the RT-11A incorporates in one recorder—accurate timing, push-button operation, remote control, quick starting plus low wow and flutter. Tape can be started or stopped within 1/10 second and tape may be jockeyed back and forth for cueing during operation. Recording time can be held to ±2½ seconds in a 30-minute run . . . and with synchronizing equipment (for which provision is made) timing can be held to 3/10 second on any length program.

The RT-11A Magnetic Tape Recorder (Fig. 12-23) consists basically of four major parts: the tape handling mechanism, power supply, recording amplifier and reproducing amplifier. The three magnetic heads ("erase," "record" and "reproduce") are a part of the tape handling mechanism.

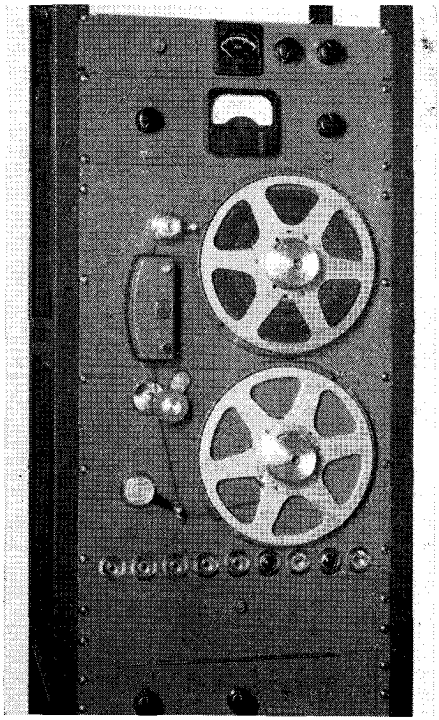

Fig. 12-23. The RCA Type RT-11A Magnetic Recorder. (Courtesy RCA)

The tape handling mechanism is designed to mount in a standard 19-inch cabinet rack. Its design is such that it may also be used in a horizontal console type machine, if desired. Careful mechanical layout provides convenience in threading and handling of tape.

All controls are recessed to avoid interference with tape during threading. Relay and solenoid operation enables interlocking of all functions and makes possible full remote control of the machine. A solenoid automatically lifts the tape on sapphire "lifters" during "fast-forward" or "reverse," eliminating the necessity for opening the head cover or rethreading. Tape alignment over the heads is held precisely by a floating casting. Thus smooth tape runs are assured. "Microswitch" control stops the machine if the tape is severed and applies reel brakes instantaneously. The complete system of control interlocking virtually eliminates the possibility of accidentally erasing a program and makes it impossible to snarl or spill the tape.

Control circuits consist of "on-off," "Speed—7.5 or 15 in./sec.," "Start," "Record," "Fast Reverse," "Fast Forward" and "Stop." The major functions may also be extended to remote positions by use of Remote Control Unit, MI-11948.

Standard NARTB reels are simply placed on the hub or removed without disturbing the hub itself. (No locating pins are needed.) Smaller RTMA reels may also be used.

Smooth tape motion is an outstanding design feature which is obtained with synchronous capstan operation and speed reduction drive through a toothed rubber belt and stabilized with a high-inertia, coupled-flywheel system. The system exhibits very low wow and flutter in starting and in operation.

The stabilizer, motor, capstan, pressure roller and heads are all mounted on a rigid casting which is in turn mounted in heavy rubber grommets in a three point suspension system.

The three heads (Erase, Record and Reproduce) employ the finest materials and are machined to tolerances comparable to those called for in optical work. Azimuth adjustment of the "Reproduce" and "Record" head is available by removing the front cover.

The amplifier portion of the RT-11A is divided into three parts, each occupying one-third of a standard BR-2A shelf. The three units (power supply, recording amplifier and oscillator, and reproducing amplifier) are all standard *RCA* "plug-in" construction. A complete wiring harness is supplied with the recorders to facilitate installation. The same harness accommodates rack and shelf or console arrangements. Tube metering and "VU" meter connections are provided to allow the easy addition of accessory panels.

Frequency response for tape speeds of 7.5 in./sec., and 15 in./sec., are shown in Fig. 12-24.

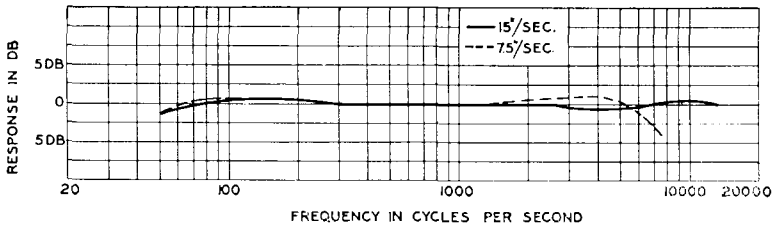

Fig. 12-24. Frequency response curves for the tape speeds of 7.5" and 15 in/sec.

SPECIFICATIONS

Power Source.....110-120 volts, ac, 60 cycles
Power Consumption (Tape Drive Unit).....210 watts
Power Consumption (Amplifier).....90 watts

Frequency Response:

Tape Speed, 15 inch/sec.
(with NARTB standard).....±2 db. from 50 to 15,000 cps
Tape Speed, 7.5 inch/sec.....±2 db. from 50 to 5,000 cps
Tape Speed, 7.5 inch/sec.....±2 db. to —5 db. from 5,000 to 7,500 cps

Distortion (3% at maximum recording level, NARTB standard) :
Less than 1% at 10 db. below maximum recording level

Input.....20,000 ohm, —10 to +25 dbm
150/600 ohm, —45 to —5 dbm

Output.....+24 dbm ±2 db. at maximum recording level
(150/600 ohms)

Signal-to-Noise Ratio:

60 db. below maximum recording level. (With a tape previously recorded at 1000 cps at maximum recording level passed once over the heads, "recorded" with zero input signal, the residual noise at the output of the reproducing amplifier shall be 60 db. below that level obtained from a tape recorded at maximum recording level.)

Tape Speed:

Start (for playing).....0.1 second
Stop (for playing).....0.1 second
Rewind (standard 10½" reel).....1 minute
Play Speed.....15 and 7.5 in./sec.
Playing Time (10½" reel).....32 min. at 15 in./sec.
64 min. at 7.5 in./sec.

(Using standard NARTB reel with 2400 feet of tape)

Wow and Flutter (combined).....1% RMS at 15 inches/sec.
.2% RMS at 7.5 inches/sec.

Timing:

±5 sec. in 30 min. at 15 in./sec. (machine to machine). ± 2½ sec. in 30 min. when played back on same machine at same temperature and humidity. Capstan is synchronous.

Dimensions:

Tape Drive Unit—Length 24½"; Width, standard 19" rack mtg.
Amp. Panel and Shelf—Height 8¾"; Width, stand. 19" rack mtg.

Reproducing Amplifier.....Height, 13¾" (overall) ;
Width, 15 3/16"; Height, 7"

Recording Amplifier.....Length, 13¾" (overall) ;
Width, 15 3/16"; Height, 6¼"

Power Supply.....Length, 12 9/16" (overall) ;
Width, 15 3/16"; Height, 7⅛"

Weight: (Approximate)

Tape Drive Unit	86 lbs.
Reproducing Amplifier	10 lbs.
Recording Amplifier	7 lbs.
Power Supply	14 lbs.
Total Approximate Weight	117 lbs.

Reels ..... 10½ inch NARTB; 7 inch RTMA

TUBE COMPLEMENT

Recording Amplifier, MI-11295	2 *RCA* 1620, 1 *RCA* 6J7, 1 *RCA* 6V6GT
Reproducing Amplifier, MI-11296	1 *RCA* 1620, 2 *RCA* 6J7, 1 *RCA* 6SN7GT
Power Supply, MI-11262	1 *RCA* 5Y3GT

EQUIPMENT SUPPLIED FOR A COMPLETE RT-11A MATCHED SYSTEM

Tape Drive Unit Including: 1 Erase Head, 1 Record Head, 1 Reproduce Head, 2 Reel Knobs	MI-11940
Power Supply (1 Tube Kit, MI-11262, not supplied)	MI-11944
Recording Amplifier (1 Tube Kit, MI-11295, not supplied)	MI-11945
Reproducing Amplifier (1 Tube Kit, MI-11296, not supplied)	MI-11948
Interconnection Cable	MI-11947
BR-2A Panel and Shelf Assembly	MI-11598/11599
2 Reels (NARTB)	MI-11932-2

ACCESSORIES

Remote Control Unit	MI-11948
VU Meter Panel (BI-5A)	MI-11265-E
Tube Metering Panel (BI-1B)	MI-11377
Cabinet Rack	BR-84 Series
Switch and Fuse Panel (57-D)	MI-4395-E

PRESTO
Professional Tape Recorders
Types RC-10/14/24
for Rack and Portable Use

Description

The *Presto* RC-10/24 tape recorder is a transport mechanism for reels up to 10½″ in diameter constructed on a panel 19″ x 24½″ primarily for relay rack mounting. (Fig. 12-25).

Distinguishing features are: Three motor drive system with solenoid actuated brakes, push-button controls which can be paralleled with relays for remote operation, three magnetic heads (erase, record, reproduce), rugged construction, bias and erase oscillator is part of the unit, reels arranged vertically and do not extend over edges of 19″ relay rack. Either NARTB hubs with 10½″ plates or 7″ RTMA reels may be used. No mechanical take-up or tension clutches are used. Tension is provided by torque motors, rewind and fast-forward speed is about 250″/sec., speeds of 7½″/sec. and 15″/sec. are normally provided giving frequency responses of 50-8,000 and 50-15,000 cps respectively. Capstan motor is duel speed hysteresis type.

The RC-10/24 should be considered as primarily for relay rack mounting although it may be mounted in any manner and will operate in any position. When rack mounted, the unit is installed with one reel above the other and the heads are on the right hand side of the panel so that easy access may be had to the reproducing head for marking the tape when editing. The fast forward and

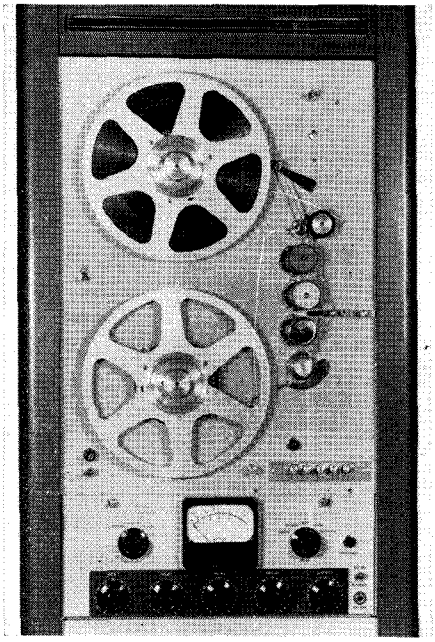

Fig. 12-25. The Presto RC-10/24 Magnetic Tape Transport Mechanism and Amplifier. (Courtesy Presto)

rewind buttons may be alternately pushed as rapidly as desired while spotting the tape with no damage to the recorder or to the tape.

The RC-10/14 is identical to the RC-10/24 except for its panel size, which is 19" x 14" and the selector control is a rotary deck type switch with a cam to release the capstan pressure pulley. The RC-10/14 may be mounted in any manner whatsoever, but it is frequently used as a portable unit in a carrying case. The 900-A (or 901-A) amplifier assembly is recommended to be used with the RC-10/14. This combination provides equipment which is portable but capable of recording for ½ hour at 15"/ sec.

An ideal and economical combination consists of an RC-10/24 permanently mounted, a 900-R1, portable unit with a 900-A2 amplifier for use with either unit. In this case the SA-9 switch to connect both recorders to the 900-A2 amplifier will prove useful for transferring the program to or from either recorder or to re-record from one recorder to the other.

The SA-9 switch transfers the output of the "record" amplifier and the input to the monitor amplifier between two tape transport mechanisms. The power supply plate voltage is also transferred between the two oscillators. The SA-9 switch may be had either in a portable metal box or on a rack mounting panel.

A useful modification of the RC-10/24 is the PB-10/24 which is equipped only for reproducing tape. Recording or erasing is not included. Many studios want such a unit so that a complete recorder is not engaged for playback or editing purposes only.

It is interesting to note the use of the torque motors in the RC-10's and the PB-10. The reels are carried directly on the motor shafts. Proper tape tension is provided by adjusting the voltage of the take-up motor in the forward direction and of the rewind motor in the reverse direction. This method provides a smoothness of speed regulation impossible when tape tension is provided by friction slip clutches and brakes. The solenoid brakes used on *Presto* recorders are for stopping only.

Rewind or fast forward is achieved merely by applying full voltage to either the rewind or the take-up motor and releasing the capstan pressure pulley.

Specifications

RC-10/14/24 MECHANISM

Type: RC-10/24

Reels: 7½" RTMA reel and 10½" NARTB hub.

Record Speeds: Standard, 7½" and 15"/sec.

Fast Speeds: 250"/sec. Rewind and forward.

Frequency response: 50 to 15,000 cps at 15"/sec.; 50 to 8,000 cps at 7½"/sec.

Dynamic Range: 55 db. at 3% RMS distortion.

Instantaneous Speed Accuracy: 0.15% at 15"/sec. or better, 0.20% at 7½" /sec. or better.

Power required: 115 volts, 60 cycle, single phase, 200 watts.

Weight: 115 lbs. packed for shipment.
Controls: Push button switch.
Panel Dimensions: 19" x 24½".
Dimensions: Packed for shipment 36" x 21" x 13".

Type: RC-10/14

Panel Dimension: 19" x 14"
Controls: Rotary switch
(All other specifications same as RC-10/24 above.)

Presto 900-A2 and 901-A1 Amplifiers

Description

The *Presto* 900-A2 amplifier consists of two distinct units: one, for recording or remote assignments; the other, for playback or monitoring. (The use of separate record and playback amplifiers, together with separate record and playback heads, permits instantaneous monitoring of the tape.) The recording channel has sufficient gain to operate from standard low impedance microphones. Three microphone channels are provided, each having its own independent step-type attenuator control. These controls are located ahead of the first low level amplifier stage. Another step-type attenuator, inserted after the first stage, operates as the master gain control to affect all input signals. A bridging input jack is available for recording programs directly from line level sources. A vu meter (with illuminated dial) serves to indicate remote output level, recording level, bias current, erase current, and playback level.

The 901-A1 amplifier unit is similar to the 900-A2 with the following exceptions: The 901-A1 consists of only one input channel which is designed for a 500/600 ohm line. Balanced bridging is provided.

Operation

Microphone Gain Controls: The gain controls for the three different microphone channels are labeled Mic. No. 1, Mic. No. 2, and Mic. No. 3.

Record Master Gain Control: The overall gain is adjusted by means of the Record Master Gain Control. This control also adjusts the bridging input for proper recording level. The proper recording level is 0 on the meter scale.

Playback Gain Control: The playback gain control is used to adjust the playback amplifier gain for desired output level.

Equalization Control: For recording, the equalizer control is set at the desired tape speed. The remote setting is used only whenever the occasion for a remote amplifier arises. In this position, the frequency response of the amplifier is uniform from 50 to 15,000 cycles.

Meter Switch: The meter switch in its various positions reads the remote output level, the recording output level, bias current, and erase current, and the playback output level. In the remote and playback positions, 0 on the meter indicates +8 vu output. For proper bias and erase currents, the meter is padded to read approximately 0 on the scale.

Bridging Input Jack: In connecting the 900-A2 amplifier unit to a balanced program line, the bridging input is unbalanced. To avoid grounding one side of the program line, it may be necessary to connect a line to line transformer.

Monitor Switch: The monitor switch transfers the record or playback output to the monitor jack. High impedance monitoring is provided to eliminate overloading of the amplifiers.

Maintenance

Frequency Response: In measuring the frequency response (900-A2, 901-A1) characteristics of the tape recorder, it is important to keep in mind that high frequency pre-emphasis is used during recording in order to compensate for all high frequency losses during the recording and playback processes. Therefore, overload of the tape would take place in the high frequency range if the recording level were not reduced when making frequency response measurements. Due to roll-off of the energy spectrum of speech and music at higher frequencies, no difficulties arise in recording a normal program with high frequency pre-emphasis.

The proper procedure in making a frequency response run is as follows: Adjust the recording level at 1,000 cycles to —12 vu as read on the volume indicator in the record position. It is then only necessary to maintain the output of the signal source into the recording amplifier at any other frequency in the range from 50 to 15,000 cycles at a constant level. The over-all response of the system can then be checked on the volume indicator in the "Playback" position.

The above mentioned procedure refers to making a frequency response characteristic only. In normal recording operations it is important to keep the volume indicator in the record position all the time, since only in this position is it possible to note overloading of the tape.

When making frequency response measurements, the recording equalizer is set at the corresponding tape speed. High impedance phones are connected to either the remote output or the monitoring jack of the recording amplifier during the recording operation. The remote output receptacle should be used only when the recording amplifier is used in remote operation as a preamplifier feeding a telephone line. The output level is then adjusted to 0 vu in the remote position of the volume indicator, indicating 6 mw in a 500 ohm load. The frequency response is then uniform from 50 to 15,000 cycles when the equalizer switch is in the remote position.

Distortion

Distortion measurements can be made by following the procedure and precautions normally used on any recording system. In no case should the recording level exceed 0 vu since this is the correct operating level of the system. Reasons for high distortion are as follows: (1) Improper Adjustment of Balancing Controls. Both the record and playback amplifier push-pull output stages are balanced with the aid of a balancing control provided in the respective cathode circuits. These are R_{23} (500 ohms) in the recording amplifier and R_{71} (500 ohms) in the playback amplifier. (Fig. 12-26.) The best way to adjust these controls is to feed a low frequency signal into the respective amplifier and adjust the harmonic distortion to a minimum value by varying the setting of the control. Ideally, a perfect balance of the two halves of the push-pull output stage results in negligible second harmonic distortion. Such an adjustment for minimum distortion represents a dynamic balancing of the two halves. An approximate balance can be obtained by adjusting the voltages across R_{24} and R_{25}, or R_{72} and R_{73}, to be equal. Originally these resistor pairs were mounted in the B+ supply of the output stage but in all the recent production units they have been connected into the cathode circuits.

Improper Adjustment of the Playback Amplifier Bias Trap: A small amount of bias appearing in the output of the playback amplifier while recording may be the cause of a high distortion reading if a distortion meter is used which has a frequency response characteristic extending up to 85 kc. A check with an oscilloscope will reveal whether there is any bias in the playback amplifier output while recording. Should there be any bias present, adjust the trap circuit consisting of the variable inductance L_4 (25 mh) and C_{21} (.0002 mfd) for minimum bias output. The trap circuit on the oscillator chassis (Fig. 12-27) of either the RC-10/14 or the RC-10/24 recorder unit is used to keep the bias frequency voltage out of the recording amplifier. This trap circuit consists of L_{202} (3.5 mh) and the capacitor C_{204} (0.0013 mfd). Both L_4 and L_{202} have been adjusted at the factory and the parallel resonant circuits mentioned above are only used as trap circuits for the bias frequency. Therefore, L_{202}, in particular, should not be used to adjust the magnitude of the bias.

Signal-to-Noise Ratio. The signal-to-noise ratio is defined as the ratio of the playback voltage obtained at peak recording level to the total playback noise when erasing a signal of peak recording level in the absence of a new signal. Hence the recording amplifier, playback amplifier, erase and bias noises are,

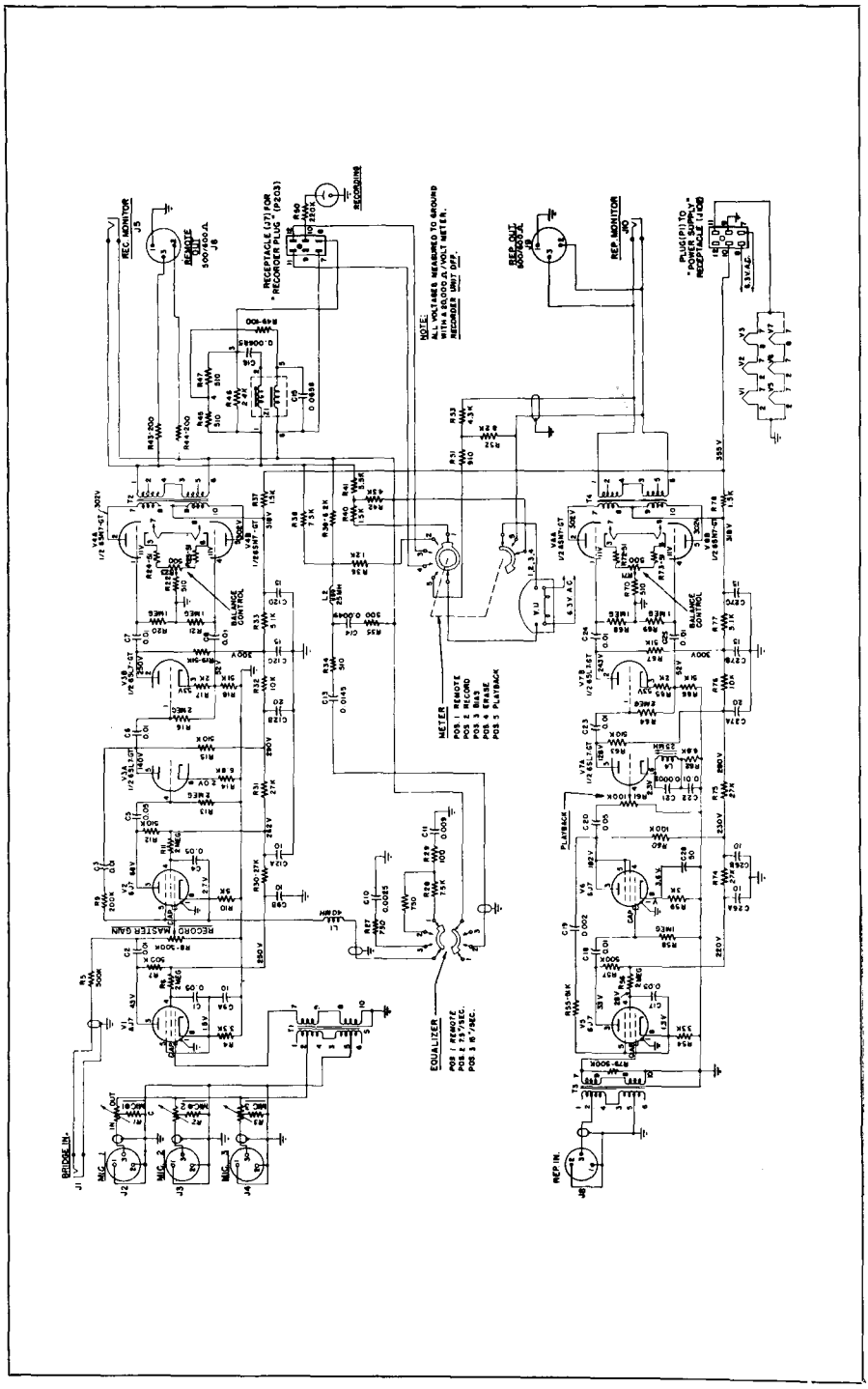

Fig. 12-26. Schematic diagram of the Presto 900-A1 Amplifier.

therefore, included in the signal-to-noise ratio. The noise meter should have a uniform frequency response from 50 to 15,000 cycles.

Since the signal-to-noise ratio of the recording system is usually in the order of 50 db., it is almost impossible to notice any noise when listening to a completely erased tape in the record position. If any noise is noticeable, it is generally possible to tell from the character of the noise what its origin is. Excessive hum in the output will be caused by close proximity of the power supply (Fig. 12-28) to either the amplifier or the recorder unit, since the power transformer field will induce a voltage in the playback head or the input transformer of the playback system.

Both the playback and record heads have been so designed that permanent magnetization will not easily occur. It is possible, however, to magnetize the heads by direct contact with a magnetized tool, and, depending upon the degree of magnetization, noise will appear either at an increase in high frequency hiss (slight magnetization) or as a sort of sputtering noise (strong magnetization). The only way to correct this condition is to demagnetize the magnetized head. It is usually not too difficult to tell whether the record or the playback head is the cause for the increased noise, since in playing back a completely erased tape that has not been in contact with a recording head, an excessive noise level during playback will indicate a magnetized playback head.

Voltage Measurements

All voltages shown on the schematic drawings are measured to ground with a 20,000 ohms per volt meter. The amplifier voltages are taken with the recorder unit in the STOP position. However, the recorder unit voltages are taken with the recorder in the REC. position. Tolerances in components may vary the measurements 5 to 10 percent.

Specifications

Type: 900-A2

Composition: One recording amplifier, one monitoring amplifier, power supply.

Response: 50-15,000 cps.

Input facilities: 3 Microphones—1 line (bridging).

Output facilities: 500 ohm at 28 dbm or 500 at +8 dbm for line.

Equalization: As required for *Presto* tape recorder heads.

Tube Complement: Same for both record and monitoring sections: two 6J7, one 6SL7-GT and one 6SN7-GT.

Power supply: one 5Y3.

Input Impedance: Microphones—250 ohms or bridging—½ megohm.

Output Impedance: 500 ohms.

Power requirement: 115 volts, 60 cycles, 70 watts.

Input level of recording amplifier: for low level, low impedance microphones. Bridging input: 8 dbm.

Panel size: Amplifier section 19″ x 7″; power supply 19″ x 3½″.

Dimensions: Packed for shipping 22″ x 7″ x 10½″ complete unit.

Weight: 47 lbs. packed for shipment.

Type 901-A1

This equipment same as 900-A2 above except that microphone inputs have been substituted with balanced line input only —either high impedance bridging or 500 ohm matching.

STANCIL-HOFFMAN MODEL R4 RECORDER

The Model R4 Magnetic Recorder is used for recording signals from microphones or other sources, and for reproducing such recordings. Recordings are made on magnetic tape, one-quarter inch wide and up to 5400 feet in length. This tape is carried on double-flange reels of various sizes, the maximum being 13¾ inches in diameter. The recorder consists of the following units:

1. The R4 Transport Mechanism (or R4-30 Tape Transport Mechanism).

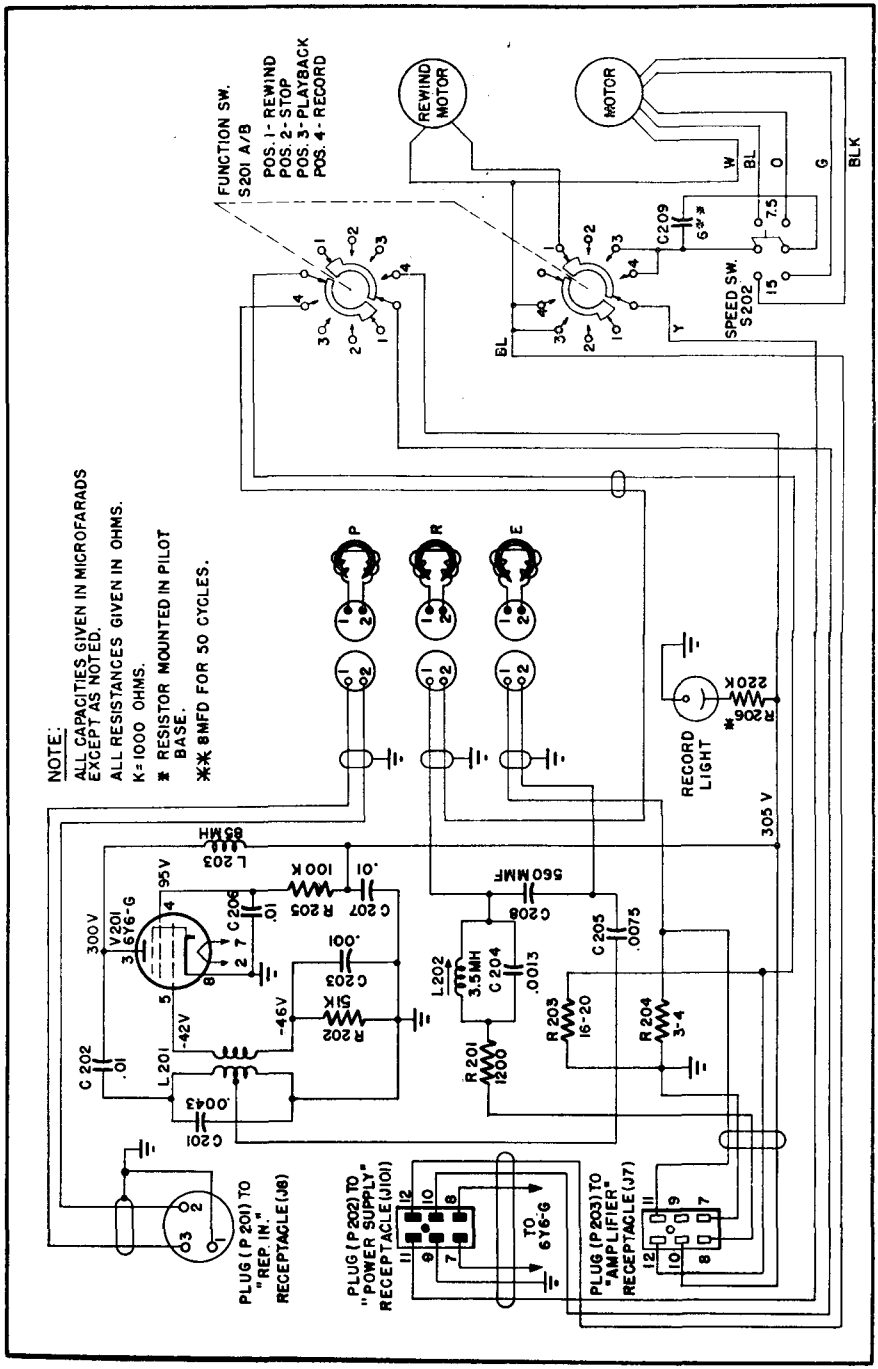
NOTE:
ALL CAPACITIES GIVEN IN MICROFARADS EXCEPT AS NOTED.
ALL RESISTANCES GIVEN IN OHMS.
K=1000 OHMS.
* RESISTOR MOUNTED IN PILOT BASE.
** BMFD FOR 50 CYCLES.
FUNCTION SW. S201 A/B
POS. 1 - REWIND
POS. 2 - STOP
POS. 3 - PLAYBACK
POS. 4 - RECORD
REWIND MOTOR
MOTOR
SPEED SW. S202
RECORD LIGHT
R206 220K
305 V
300 V
V201 6Y6-G
L203 85MH
R205 100K
C207 .01
C206 .01
C203 .001
R202 51K
L201
C202 .01
C201 .0043
C208 560MMF
C204 .0013
L202 3.5MH
R201 1200
C205 .0075
R203 16-20
R204 3-4
C209 6**
PLUG (P201) TO "REP. IN." RECEPTACLE (J8)
PLUG (P202) TO "POWER SUPPLY" RECEPTACLE (J101)
TO 6Y6-G
PLUG (P203) TO "AMPLIFIER" RECEPTACLE (J7)

Fig. 12-27.

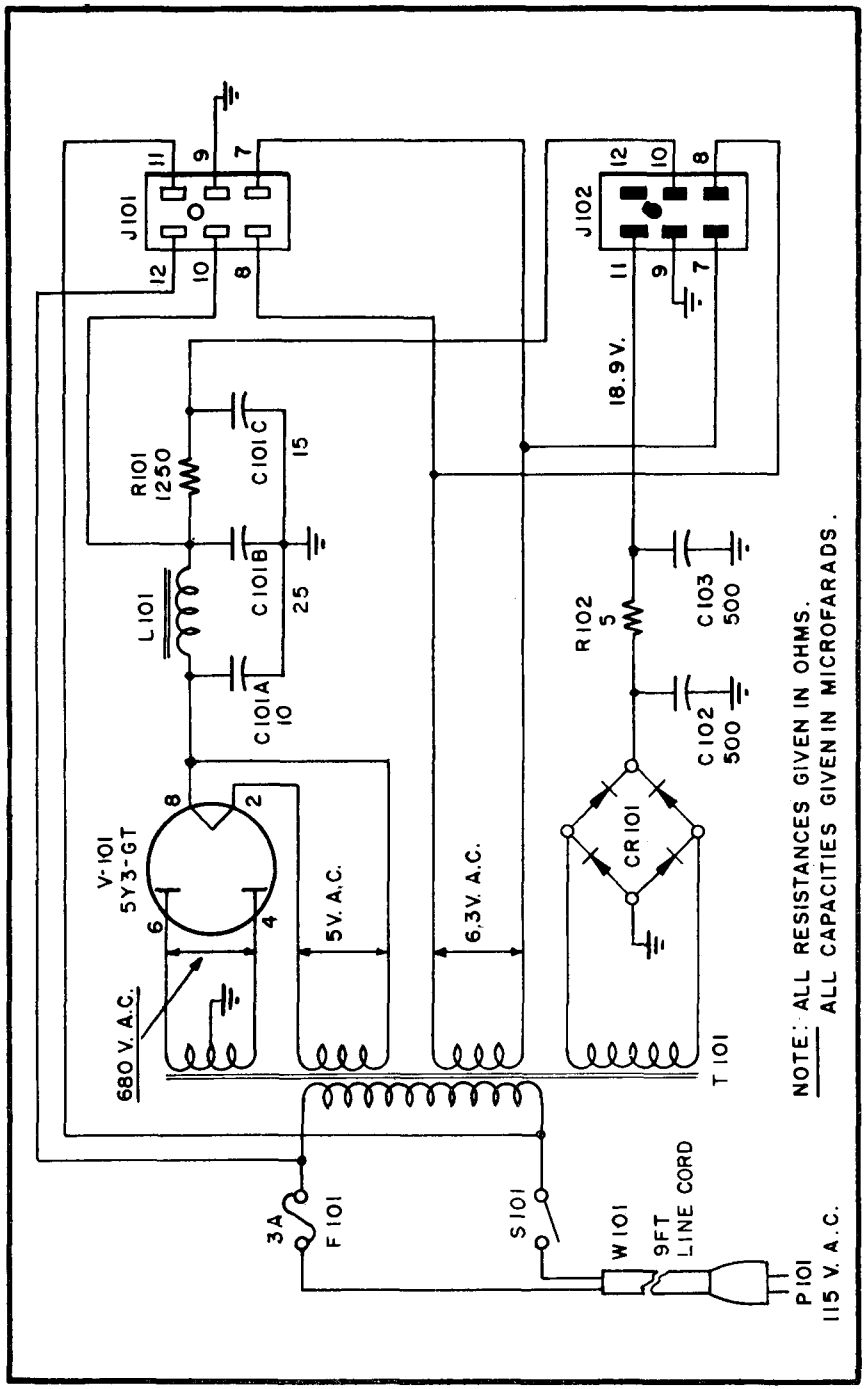
J101
J102
R101
1250
C101C
15
C101B
25
C101A
10
L101
V-101
5Y3-GT
680 V. A.C.
5V. A.C.
6.3V. A.C.
18.9V.
R102
5
C103
500
C102
500
CR101
T101
NOTE: ALL RESISTANCES GIVEN IN OHMS.
ALL CAPACITIES GIVEN IN MICROFARADS.
3A
F101
S101
W101
9FT
LINE CORD
P101
115 V. A.C.

Fig. 12-28.

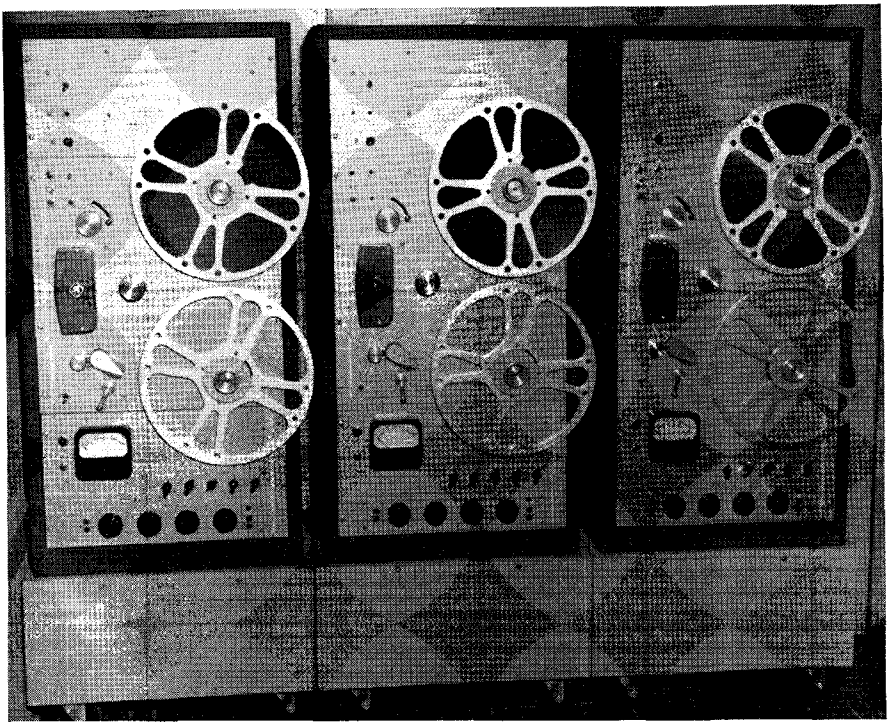

Fig. 12-29. Assembly of three Stancil-Hoffman R-4 Recorders for continuous record-playback. (Courtesy AFRS)

2. The ARP4 Record-Play Amplifier (or ARP4-30 Record-Play Amplifier).
3. The P4 Power Supply with monitor amplifier.
4. The AL3 Microphone Preamplifier (up to two, optional).
5. The AH3 Line Matching Unit (up to two, optional).

Three complete units (Fig. 12-29) are shown in an installation of the *Armed Forces Radio Service.*

1. When recording or playing back, the R4 Tape Transport Mechanism withdraws the tape from the supply reel, past the magnetic erasing head, recording head, and play head, and winds the tape onto the take-up reel. Speed of motion is determined by the drive motor speed with the capstan and pinch-wheel assembly; either of two speeds can be selected. (Normal speeds are 15 to 7.5 inches per second. The R4-30 Recorder operates at 30 and 15 inches per second.) The Tape Transport Mechanism automatically stops tape travel when the tape supply is exhausted or if the tape breaks. It rewinds or runs forward through the tape at high speeds, allowing the operator to vary the fast-forward or rewind speed. The tape is held clear of the heads for high speed operation, but may be returned to the heads for editing.

2. The ARP4 Record-Play Amplifier combines a recording amplifier, bias and erase oscillator, input controls, line amplifiers, and playback amplifier. A large vu meter is used to determine input level for recording, output playback level, and bias and erase oscillator current. Switches enable the operator to select output from incoming (LIVE) material, or recorded (TAPE) material, since

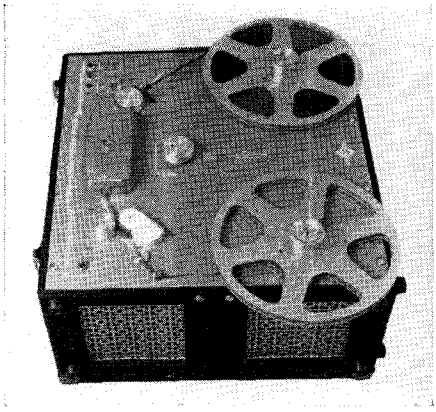

Fig. 12-30. Transport mechanism of the Model R-4 in carrying case. (Courtesy Stancil-Hoffman Corporation)

playback occurs simultaneously with recording.

The ARP4 Record-Play Amplifier contains provisions for plugging in up to two microphone preamplifiers or line matching units.

3. The P4 Power Supply supplies both regulated and unregulated B voltage (and filament voltage) for ARP4 Amplifier and associated preamplifiers. On the chassis with the P4 Power Supply is the output tube of the monitor amplifier and the monitor speaker. (The input tube and the monitor volume control are on the chassis of the ARP4 Amplifier.) The P4 Power Supply also contains the Main Power Switch for the entire recorder, and the fuse.

4. The AL3 Preamplifier is a single tube preamplifier, which can be plugged into a sub-chassis on the ARP4 Amplifier. It is latched in place with a locking handle. It provides sufficient gain to bring all normal microphone output levels to mixing level for the ARP4 mixing system.

5. The AH3 Line Matching Unit replaces the AL3 Preamplifier on the sub-chassis of the ARP4 when it is desired to use the mixing system for high-level inputs. It is constructed on the same size chassis as the AL3 Preamplifier.

The R4 Recorder may be mounted in carrying cases (Fig. 12-30) in a rack cabinet or in a studio console.

If delivered mounted in a console or rack cabinet, the interconnecting cables are installed, and the recorder is ready for operation. If mounted in carrying cases, a set of cables is attached to the rear of the ARP4 Amplifier (Fig. 12-31), which cables couple to receptacles in the R4 Tape Transport Mechanism. An ac cord is attached to the P4 Power Supply for connection to a power source.

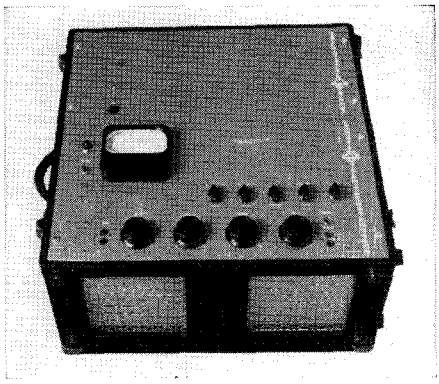

Fig. 12-31. Companion amplifier unit for the Model R-4. (Courtesy Stancil-Hoffman Corporation)

SPECIFICATIONS

MODEL R4

Rack-Console-Portable

Magnetic Tape Equipment

Frequency Response	±1 db. from 50 to 15,000 cycles at 15 inch speed ±1 db. from 50 to 7,500 cycles at 7.5 inch speed.
Playing Time	5 minutes to 144 minutes depending on reel size and tape speed.
Flutter or wow	0.08% at 15 inch speed.

SPECIFICATIONS (Continued)

Tape Speed	Two-speed operation at 15 inches and 7.5 inches per second. Flat recording and playback equalization at both speeds. Speed change is accomplished by a single switch which also automatically changes "pre" and "post" equalization.
Rewind Time	Approximately 2½ minutes for large reel.
Minimum playback signal-to-noise ratio and distortion	Playback amplifier system noise down 58 to 60 db.
Preamplifiers (Accessories)	Two plug-in preamplifiers with a noise level down at least —*126 dbm.* Gain approximately 45 db. Overall microphone channel gain 95 db. Can be strapped for 30/50 220/250 cycles, 500/600 ohms.
Inputs	Microphone channels as listed above and 10,000 ohm bridging continuously variable from —30 to +15. Note: The plug-in preamplifiers may be replaced with "no-gain" bridging units at 10,000 ohms —30 to —15 level for rerecording and dubbing purposes.
Output Impedance	600/150 balanced or unbalanced, continuously variable from infinity to +4 vu. Also high impedance 20,000 ohm variable from infinity to 5 volts. Monitor amplifier to voice coil impedance driving small incorporated speaker.
Bias and Erase oscillators	Master oscillator and power amplifier tuned to approximately 85 kilocycles furnishing both Bias and Erase power. Erasure down to at least 65 db.
Volume indication	Standard 5 inch illuminated vu meter.
Controls	Three dc electrically interlocked push buttons FORWARD, REWIND and STOP located on Mechanical section. RECORD button located on Electronic section. Accidental operation of RECORD minimized by this physical placement and interlock features. High speed forward and rewind controlled by a single knob permitting *any speed* in *either* direction for split editing and cueing purposes. Automatic tape lift to prevent head wear in high speed motion. All functions may be easily controlled remotely from any number of positions.

Tubes—15 complete unit	*Electronic Section*	*Regulated Power Supply*
	1—6SJ7	1—6X5
	3—12AY7	1—OB2
	2—12AU7	1—OA2
	1—6C4	1—6AK5
	1—6AK5	
	1—6AQ5	
	1—12AY7 per amplifier	

SPECIFICATIONS (Continued)

Panel Dimensions	Electronic Section 10½ x 19 inches Regulated Power Supply, Monitor Amplifier and Speaker 8¾ x 19 inches. Mechanical Section 19¼ x 19 inches.
Weight	Complete in carrying cases—approximately 90 pounds.

Fig. 12-32. The Stancil-Hoffman MiniTape Magnetic Tape Recorder. (Courtesy Stancil-Hoffman Corporation)

STANCIL-HOFFMAN MINITAPE RECORDER

The M-5 *Minitape* is a completely self-contained battery-operated portable magnetic unit for recording only. (Fig. 12-32.) Microphone, amplifier, motor drive system, erase head and batteries are built into a small ,leatherette case of shoe box dimensions, weighing slightly over 13 pounds. A single OFF-ON switch provides all operating controls since a factory-set volume gives optimum recording level for all normal operations.

A small microphone of broadcast quality is supplied with the unit. The carrying case itself, in addition to a sturdy handle, has a shoulder strap for ease in carrying. Thus, the operator's hands are completely free even when recording.

Though primarily intended for broadcast use, the recorder has immediate applications to all fields of reporting. For newspaper work, the recorder can protect reporters from error in transcribing verbatim interviews. Police and insurance companies can record accident investigations, etc.

Standard ¼″ wide plastic or paper base tape is used for recording a single track 200 mils wide. *Minitape* recordings may be reproduced on any standard magnetic tape unit.

The *Minitape* has its own batteries which last from 1½ to 3 hours of operation. Extra weight is eliminated by the fact that no relay or rewind equipment is installed.

The recorder can be slung from the shoulder with ease and the tiny microphone can be placed in the pocket for picking up events candidly if desired.

SPECIFICATIONS

Frequency Response	100 to 5000 cycles/sec. (High and low passed at these frequencies to avoid background noise interference.)
Tape Speed	Standard 7.5/15″/sec.
Playing Time—5″ reel (600′) of tape	7.5 minutes at 15 inches/sec. 15 minutes at 7.5 inches/sec.
Wow and flutter	Between .3% and .4% peak to peak.
Signal-to-noise ratio	Better than 35 db.
Controls	One switch to energize the drive motor and instant heating amplifier. There is no gain control.

SPECIFICATIONS (Continued)

	The large built-in dynamic range accomplishes level control. Pilot light indicates normal motor speed.
Monitor	A phone jack is installed for crystal headphone monitor. The 30 kc bias can also be read across the jack for test.
Distortion	Less than 3% total harmonic distortion.
Erase	Complete erasure, full track.
Power required	Two 67.5 volt miniature "B" batteries. *Eveready* No. 467 or equivalent. Two No. 2 flashlight cells for filaments. 6 volt leak-proof re-chargeable storage battery for motor drive. One charge lasts between two to four hours.
Microphone	Crystal sound cell. Dynamic mic on special order.
Dimensions	14" x 6½" x 6¼".
Weight	Slightly more than 13 pounds.

Fig. 12-33. Model AP-8 Miniaturized Playback Amplifier. (Courtesy Stancil-Hoffman Corparation)

Miniaturized Playback Amplifier

A companion unit to the *Minitape* is a hearing aid type amplifier to check recorded tape. (Fig. 12-33.)

The model AP8 is a complete amplifier with batteries considerably smaller than a package of cigarettes and weighs approximately 3¼ ounces. It comes with a hearing aid type of reproducer of 120 ohms impedance (there is sufficient power to handle standard head phones). The *Minitape* may be adapted with a jack to use the AP8 as a playback device for field checking, or, a separate magnetic playback head may be permanently attached to the AP8 input cord which would not require any changes in the *Minitape*. The AP8 can also be used as a preamplifier with the *Minitape* for extremely low level work.

The "A" battery life is 30 hours. The "B" battery life is 200 hours.

STANCIL-HOFFMAN MULTI-CHANNEL RECORDER

Description

The CRM15 Multi-Channel Communications Recorder is a magnetic recorder designed to record signals simultaneously from 15 separate sources, with selective playback of the recorded signals either at the time of recording or subsequently.

The CRM15 uses a tape of paper or plastic strip coated with magnetic oxide, slightly under .002 inches in thickness and .700 inches wide. 5000 feet of tape is contained on a 13¾ inch diameter reel with a 4 inch diameter hub. On this tape the recorder records 15 separate tracks, each track being .045 inches wide with .010 inches separation between each two tracks.

The unit contains two complete duplicate recorders and playback systems. Automatic controls determine the cycles of operation of each of the recorders.

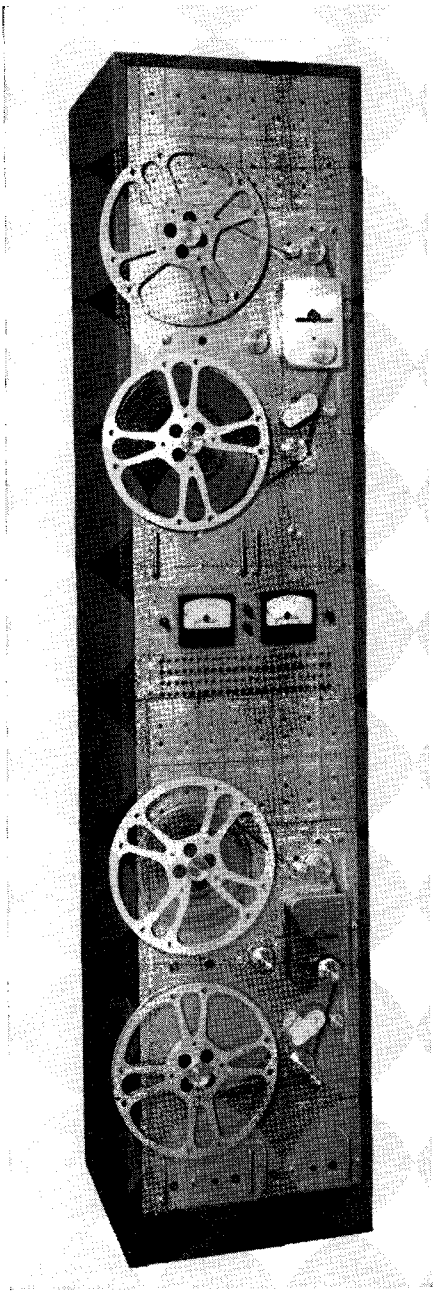

Fig. 12-34. Model CRM15 Multi-Channel Communications Recorder. (Courtesy Stancil-Hoffman Corporation)

A brief description of each of the units comprising the Recorder (Fig. 12-34) follows:

The Tape Transport Mechanism withdraws the tape at constant speed from a supply reel, pulling it over the recording heads for recording and the playback head for reproducing, and spooling it on a take-up reel. The Tape Transport Mechanism also winds the tape rapidly forward to allow the operator to reach a certain section within a spool of tape without proceeding at the normal (slow) forward speed, rewinding the tape from the take-up reel to the supply reel to return it to position for playback, and braking the motion of the tape to a stop from either normal or high speed.

The Tape Transport Mechanism mounts the 15 Recording Heads and the single Play Head. Cables bring the recording and biasing signals from the Recording Amplifiers. The Play Head is mounted within an indexing carriage which moves the head across the face of the tape to select any single channel for playback. The output of the Play Head is carried by a cable to the Playback Amplifier. A series of push button switches controlling the operation of the Tape Transport Mechanism is mounted in the upper right hand corner of the panel. A rewind speed control in the center of the panel determines the rate at which the tape is moved high speed forward or rewound. Speed may be varied from a speed less than normal to a speed more than 50 times normal in either direction.

The normal forward motion of the tape is determined by a capstan and pinchwheel assembly. The pinchwheel holds the tape in contact with the capstan, which is driven by a two-speed motor. At its high speed, the motor moves the tape at a normal forward speed of 7½ inches per second. At its slow speed the tape is moved at 3¾ inches per second.

Pilot lights on the front panel of the tape transport mechanism indicate that the machine is ready for recording. The automatic functions of the recorder are controlled by a time clock mechanism and associated circuits which are built into the relay subpanel at the rear of the Tape Transport Mechanism.

The Recording Amplifier is a plug-in device. Any number up to 15 may be installed, each amplifier operating a single channel of the recorder. (Recording heads not associated with recording amplifiers have no effect on the magnetic tape.)

The Recording Amplifier operates from an input signal of 0 db. level (6 milliwatts) mixing this signal with the bias signal from the Bias Oscillator and amplifying the mixed signals for recording. Two screwdriver potentiometers are provided on each Amplifier. One determines the level of the recording signal and the other determines the level of the bias signal.

Input signals are brought to the Recording Amplifiers at the appropriately numbered jacks on the Jack Strip.

The Bias Oscillator serves as a master oscillator to provide bias for all 15 channels. Bias is necessary in magnetic recording to provide a recorded signal on the tape of satisfactory level and low distortion. The bias signal is high in frequency and large in amplitude compared to the recording signal. The bias frequency used is approximately 36 kc. The signal generated by the Bias Oscillator is mixed with the recording signals in each of the Recording Amplifiers. A control of the amplitude of the bias signal is included in the Bias Oscillator.

To provide for manual recording, a push button switch is mounted on the front panel of the Bias Oscillator. When this switch is pressed (with the tape transport mechanism in normal forward operation) recording takes place on all channels equipped with Recording Amplifiers.

The Playback Amplifier amplifies the voltage generated in the playback head by the motion of the tape, raising it to approximately 0 db. level (6 milliwatts) output from a normal full level recorded signal. The output of the Playback Amplier is controlled by a screwdriver potentiometer accessible from the front panel of the Amplifier. The output of the Playback Amplifier appears at the labeled jacks on the Jack Strip as a 600 ohm balanced signal.

The Power Supply provides voltage for the operation of the recording and playback amplifier, and power for the operation of the relays and solenoids which control the function of the Tape Transport Mechanism.

On the front panel of the Power Supply is the Main Power Switch for each recorder. The switch is associated with a red jeweled pilot light which indicates whether or not power is ON. The Power Supply operates from 117 volts ac, 60 cycles, deriving this power from the ac junction box at the lower rear of the left side of the rack cabinet.

Also available from the front panel of the Power Supply are two fuses. One fuse is a 5 amp 3AG fast acting fuse, which is the main fuse for each Recorder. The second fuse is a 2 amp 3AG slow acting fuse. This fuse is in the circuit associated with the pinchwheel solenoid. When the pinchwheel solenoid is actuated, a momentary large current drain occurs lasting aproximately 1/10 of one second. As the slug of the solenoid seats, an internal switch is opened, which reduces the current drain to approximately .2 amp. The 2 amp slow acting fuse prevents damage to the power supply components in case this switch is not actuated by the solenoid slug. The J2 Jack Strip mounts the jacks for the inputs to the 15 channels and the output from the playback amplifier.

The Bias Meter Panel mounts meters and switches for both upper and lower Tape Transport Mechanism. The left hand bias meter and switch assembly is associated with the upper Tape Transport Mechanism and the right hand meter assembly with the lower Tape Mechanism. A selector switch with 15 Transport positions allows the meter to be used selectively with each of the 15 Recording Amplifiers of the associated Recorder. A function selection switch determines whether the meter shall indicate the bias output of each channel or the input level being brought to each channel through the Jack Strip.

An erasing coil, separate from the Recorder, is used to erase the magnetic tape. This device is called a Bulk Eraser.

A small blower is installed on the rear door of the rack cabinet. The blower draws air through a filter, raising the air pressure inside the rack cabinet slightly, so that air always flows out of the vents in the cabinet. This blower runs continuously whenever ac power is connected to the rack.

SPECIFICATIONS

Frequency Response	±3 db. from 200 to 3500 cycles at 3¾ inches per second. ±2 db. from 200 to 7500 cycles at 7½ inches per second.
Signal-to-noise ratio	At least 40 db.
Distortion	Not in excess of 5% total harmonic at "0" input recording level (6 milliwatts)
Tape speed	3¾ or 7½ inches per second.
Tape width	0.70 inches.
Input impedance	600 ohms balanced.
Input level	0 db. (6 milliwatts).
Playback amplifier output impedance	600 ohms balanced at 0 db. (6 milliwatts).
Erase	Bulk erasing device is provided with each unit.
Cross talk between channels	Negligible.
Recording time	Up to 4 hours and 30 minutes on each recorder.
Control facilities	Push button operation for Playback, Rewind, Stop. Fast-Forward and Rewind controlled by a potentiometer on the front panel, permitting any speed forward or reverse for spotting or cueing purposes. Automatic operation includes a time clock, which starts the machine every 4 hours or other selected intervals. In case of tape breakage or power supply failure, the machine is automatically stopped, and the companion machine automatically started. When the tape has run through the recorder, it stops automatically.
Dimensions	CRM15 Tape Transport Mechanism 21″ high x 19″ wide x 13″ deep. AR6 Recording Amplifier 5¼″ high x 2″ wide x 6½″ deep. AO1 Bias Oscillator 5¼″ high x 2″ wide x 6½″ deep. AP6 Playback Amplifier 8¾″ high x 8½″ wide x 6¼″ deep. P6 Power Supply 8¾″ high x 8½″ wide x 16½″ deep. IP3 Bias Meter Panel 5¼″ high x 19″ wide x 2⅝″ deep. J2 Jack Strip 1¾″ high x 19″ wide x 4⅝″ deep. Total CRM15D dual recorder assembly in rack cabinet, 89½″ high x 22″ wide x 21″ deep.

SPECIFICATIONS (Continued)

Power consumption	850 watts total maximum for CRM15D and blower.
Weight	Total CRM15D dual recorder, in welded steel rack cabinet, 425 pounds.

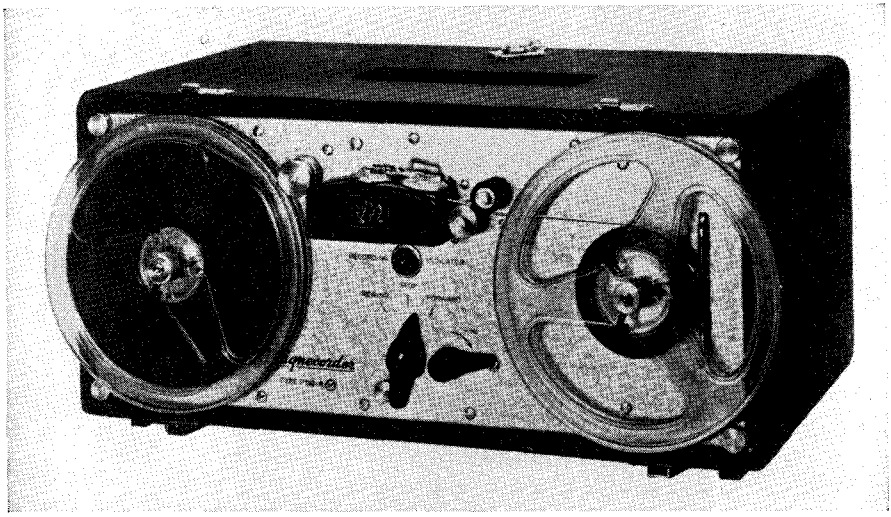

Fig. 12-35. Magnecorder PT63-AH basic recorder mechanisms. (Courtesy Magnecord Inc.)

MAGNECORDER PROFESSIONAL TAPE RECORDER

Model PT63-A Transport Mechanism

Description

The PT63-A tape transport mechanism (Fig. 12-35) consists of several sections fitted together to give a complete operating unit. The following subdivisions may be made: Speed Reducer system, Pay-off and Rewind system, Take-up and High Speed Forward system, Oscillator and Electrical Control system.

Speed Reducer System: The speed reducer system consists of the motor which drives two rubber pucks which in turn drive the capstan-flywheel assembly. In order that the flutter and wow imparted to the tape be as low as possible, the concentricity of these drive elements is maintained. This permits both pucks to fit the motor shaft and capstan drive hub accurately to provide a constant speed for the tape. Employing two drive pucks provides double the driving surface under all conditions and assures a more constant drive. As this system drives from a hub on the capstan shaft, it does not interfere with the filtering action of the flywheel.

Pay-Off and Rewind: The pay-off and rewind system consists of a motor which has a "one-way" pawl-actuated clutch on the rear shaft extension. This operates in such a manner so that as the tape is unwound from the spool, a certain amount of drag is imparted to the shaft which is then transmitted to the tape as tension. The drag is variable by means of a split nut which compresses a sponge rubber spring. This causes varying pressure on the dry felt friction member. When rewinding, the pawl assembly is disengaged by a direction-sensitive spring which allows the shaft to turn free. A rapid rewind results.

Tape Take-Up System: The take-up system is driven from the main drive motor through another rubber puck. This puck drives a concentrically

mounted hub on the take-up shaft which is coupled to the shaft through a slipping assembly similar to that employed in the pay-off system. This is adjustable for greater or less take-up tension by means of a split nut, the same as the pay-off system. When rewinding, a solenoid is used to disengage the puck from the drive hub so that the ball-bearing mounted shaft may turn freely. When the rewind has been completed, the solenoid is deenergized, allowing the hub which applies a braking force necessary to stop the reel. High-speed forward is accomplished by another puck which contacts the take-up shaft through a hub which is fixed to the shaft. Operating the High-speed Forward lever engages this puck and the hub, while at the same time turns on the main drive motor. If

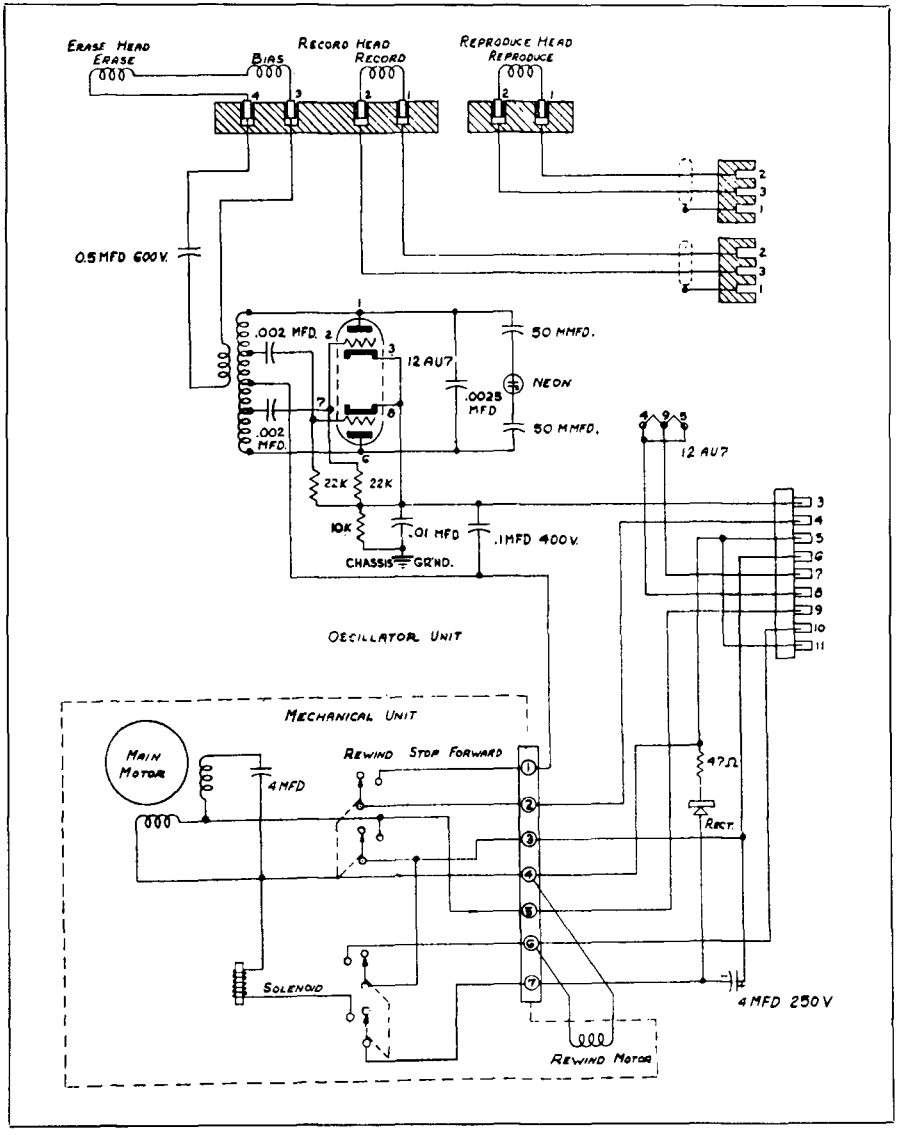

Fig. 12-36. Schematic of the Magnecorder PT63-A Oscillator Unit.

more pressure is applied on the High-speed Forward lever, the contact between the puck and motor shaft-hub will be greater, thus higher speed is obtained.

Bias Oscillator Assembly: The bias oscillator included in the PT63-A is used to supply both erase and bias power to the heads. It operates at a frequency of approximately 60 kilocycles and furnishes a power output of four watts. Most of this power is used in the erase head which has a winding of 20 turns and carries a current of between 1.1 and 1.3 amperes. The bias winding of the record head carries the same current since both coils are in series—but the number of turns is only six. The oscillator assembly (Fig. 12-36) also feeds power to the neon lamp on the front panel which shows when the unit is operating properly. Included on the oscillator assembly is a rectifier condenser for supplying direct-current power to the solenoid.

Controls and Switching: The control switch of the PT63-A has three positions. In "REWIND," the rewind motor and the take-up solenoid are energized. In "STOP," all circuits are disconnected. In "FORWARD," the main drive motor is energized and the circuit is made through a switch so that power may be supplied to the oscillator from the power supply. An external power supply must provide for the 117 volt, 60 cycle motor needs, 6.3 volt oscillator tube heater filament, and approximately 300 volts, at 20 millamperes oscillator plate. These several sources are connected to the unit through a ten contact receptacle which is part of the oscillator assembly.

Connection to the head circuits are made through *Cannon* connectors located on the oscillator assembly at the rear of the unit. The record head should be supplied with approximately one milliampere peak current from a suitable equalizer such as either the *Magnecorder* 7½ or 15 inch unit. The output from the playback head should be connected to a transformer designed for approximately a 60 ohm primary. The secondary of this transformer, when operated into a grid, will furnish approximately 15 millivolts when reproducing a completely recorded tape. The frequency vs. output curve of this combination is shown in Fig. 12-37 when the signal was recorded using a *Magnecorder* 15″ tape speed equalizer.

The PT63-A recorder mechanism is designed for use with all PT63 or PT7 *Magnecorder* amplifiers to faithfully record and reproduce any frequency in the audio range. It is equipped with a triple-head assembly which contains separate erase, record and playback heads to enable monitoring the actual output of the tape recording as it is being made. Consisting of a precision tape transport mechanism, head asembly, bias oscillator and control switching mechanism, the PT63-A can be used as a portable recorder (with case) or can be mounted in standard 19″ studio racks.

Rack mounting is accomplished with the aid of a *Magnecorder* PT6-H adapter

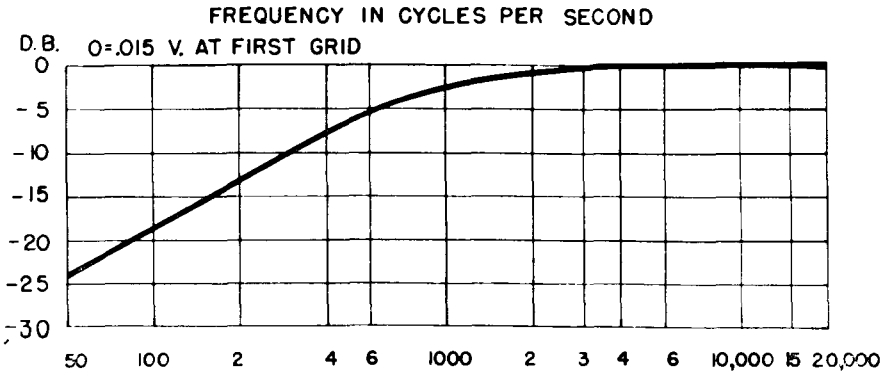

Fig. 12-37. Frequency response curve of the PT63-A.

panel. This panel is 8¾″ high by 19″ wide and accommodates the 7″ high by 17″ recorder control panel. It adapts the recorder for use in any standard 19″ rack.

Three interconnecting cables are provided to connect the PT63-A recorder mechanism to the PT63 or PT7 amplifier. These cables are shipped with the amplifier and consist of two audio cables, one for connection to the recording head and the other for connection to the playback head. The third, or larger cable is used to carry power to the recorder drive mechanism.

Changing Speeds: The PT63-A is provided with two capstans which allow for two-speed operation. The smaller capstan (with the larger pressure roller) provides for the 7½″ per second tape speed, while the larger capstan (smaller pressure roller) provides for the 15″ per second tape speed. Changing these capstans requires the removal of the knurled screw holding the capstan in place, slipping the capstan off and replacing it with the other capstan. It is imperative that the surface of the shaft and mating capstan surface be extremely clean for proper fit. This applies particularly to small particles of grit or dirt which might become embedded in the metal shaft. If proper fit is achieved, the capstan will remain in place without the knurled screw.

If the unit is equipped with a two speed motor (900-1800 rpm), the small capstan is for 3¾″ and 7½″ tape speeds and the large capstan is for 7½″ and 15″ tape speeds. The speed of the motor is changed by throwing a switch. This switch is mounted on the rear panel of the PT63-A2 and can be operated with a pencil or screwdriver through the opening in the side of the case. When facing the front panel of the unit, throwing the switch to the *right* puts the unit on slow (900 rpm) speed.

Equalization: Since the PT63-A is provided with two tape speeds (three for PT63-A2), it is necessary that different recording characteristics be provided for the heads when running at the different speeds. These recording characteristics are conveniently provided by equalizers designed for this purpose. The frequency vs. amplitude characteristics of the current through the recording head for the three equalizers are shown in Fig. 12-38.

The PT63-A provides for both 7½″ and 15″ tape per second operation, which speed is achieved through the use of interchangeable capstans. The frequency response at 15 inches will be essentially flat from 50 to 15,000 cps—7½ inches per second will be essentially flat from 50 to 7500 cps when using *Magnecorder* amplifiers properly compensated for each of the speeds.

When furnished with a 2-speed motor, a third speed (3¾ inches per second) is also available on the unit. At this tape speed, the response will be essentially flat from 50 to 4000 cycles per second when using a properly compensated amplifier.

Maintenance

Heads: All the heads should be cleaned as soon as there is evidence of an accumulation of dirt upon their surfaces. This usually will be material which has

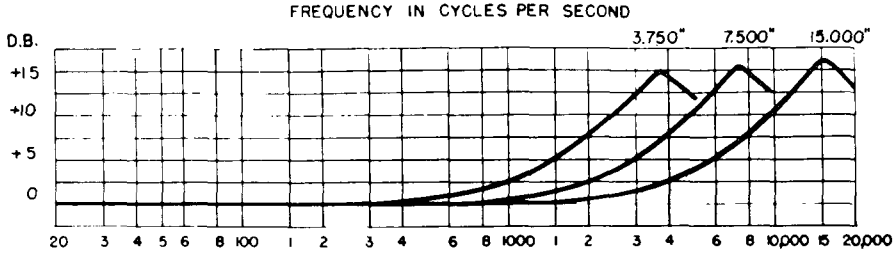

Fig. 12-38. Frequency vs. amplitude characteristics of the PT63-A.

been scraped off the tape during its passage. The procedure for cleaning consists of wiping surfaces with a soft cloth saturated in a suitable solvent such as carbon tetrachloride.

The record and reproduce heads normally have a life expectancy of about 1000 hours of operation. The criterion for determining when the head is worn out is when its high frequency is found to be seriously lacking.

Wear on the erase head is such that a much longer life expectancy exists. Determining when the erase head is worn out is not nearly as simple as it is for record and reproduce heads. The decision should be based on whether the head is still erasing tape properly and whether there is any possibility of damage to the tape through sharp or rough edge formed by the worn head.

Tension Adjustments: The tension adjustments should be checked after approximately each 200 hours of operation. The procedure for this is as follows. Obtain a 16 ounce spring balance to which a piece of string approximately six feet long is attached. Wrap the free end of this string around the hub of an empty reel. Place the reel on the pay-off spindle and pull it with the spring balance. The balance should indicate a tension of five to six ounces required to turn the shaft. Repeat the procedure for the take-up shaft, except use the motor to exert the tension. The PT63-A is designated for use with 7 inch plastic spools—other sizes cannot be used without readjusting the tensions accordingly.

Drive Pucks: The main drive pucks should be cleaned frequently if there is any evidence of oil on their surfaces. Oil on either the pucks or drive surfaces will reduce the friction between these surfaces leading to reduced capstan speed. Use a small amount of carbon tetrachloride or a similar solvent.

Lubricating the Unit: The following points should be oiled with SAE No. 20 oil once every six months with two drops at each point. Both the front and rear capstan bearings, the drive motor bearings as indicated on its name plate and the Rewind motor bearings. Two drops of *Finoil* should be applied to the pressure roller shaft and both guide roller shafts once a month. It is important that there be no excess on these bearings or it will be deposited on the tape. In oiling the pressure roller bearings, it is important to reassemble the unit with the washers properly inserted to prevent binding of the roller. After several years of operation it will be wise to replace the grease originally used on the switch operating shaft to prevent undue wear on the switch actuating surfaces.

SPECIFICATIONS

Model:	PT63-A (in case)
3 Head Unit:	Heads separately alignable and replaceable. Unit contains: *Magnecorder* Erase head.....91A48 *Magnecorder* Record head.....91X74 *Magnecorder* Reproduce head.....91X73
Frequency Response:	Flat from 50-15,000 cps, ± 2 db. at 15″/second tape speed. Flat 50-7500 cps, ± 2 db. at 7½″ /sec. tape speed when proper equalizer in amplifier is used for speed selected.
Recording Speeds:	15″/second or 7½″/second interchangeable. Both quick-change capstans supplied. No tools required for fast changeover.
Rewind Speed:	1200 feet (full 7″ reel) rewound in approximately 40 seconds.
Flutter:	Maximum 0.3%.

SPECIFICATIONS (Continued)

Motors:	Synchronous 117 V 60 cycle ac drive motor. Shaded pole motor for rewind.
Power Requirement:	117 V 60 cycle, single phase ac 70 watts.
Bias Oscillator:	Built in. Uses single 12AU7 tube. 6.3 at .3 amps and 300 volts at 40 ma supplied from PT63 or PT7 series amplifiers.
Panel:	7″ x 17″ *Magnecorder* Grey Hammered finish.
Portable Case:	Black grain leatherette over wood construction. 18″L x 8″H x 15½″ deep.
Connections:	Power connections for motors and 12AU7 made to *Jones* Plug. Audio connections are for *Cannon* receptacles.
Weight:	29 pounds (in case).

Fig. 12-39. Magnecorder PT63-J record-reproduce amplifier. (Courtesy Magnecord Inc.)

MODEL PT63-J AMPLIFIER

Description

The *Magnecorder* PT63-J amplifier is designed to provide two functions in conjunction with the PT63 or PT7 series recorder mechanism—that of making a recording and that of reproducing such a recording. The amplifier (Fig. 12-39) contains a separate recording amplifier, reproducing amplifier, and a single power supply for both. Circuitry for recording and playback includes the necessary compensation to provide an essentially flat frequency response from the tape from 50 to 15,000 cycles per second.

The unit is housed in a leatherette covered case equipped with a carrying handle for portability. Front and rear of case are removable for access to controls and connections.

Recording Amplifier: The recording amplifier utilizes conventional resistance coupled circuits with the following

tubes; 5879 1st audio, 5879 2nd audio, 12AU7 3rd amplifier and phase inverter, 12AU7 push-pull output stage. Input to the recording amplifier may be by means of the input transformer of the bridging circuit. The input transformer may be arranged for either 50 or 250 ohms input impedance—reference to the schematic will indicate the colors of the wires to be used for either. The bridging input is connected in parallel with the recording amplifier gain control, and therefore, one side of the circuit is grounded. It should be noted that connecting a telephone line to this input will not give satisfactory results because of the unbalanced condition unless an isolating transformer is used. If a low impedance is connected across the bridge input, no signal may be obtained through the microphone input because of the shunting effect of the low impedance on the output circuit of the input stage.

The output of the recording amplifier is fed through the recording off-on switch to either of the two equalizers. The output is also fed to the meter circuit and the headphone jack.

Playback Amplifier: The reproducing amplifier (see Fig. 12-42) utilizes the following tube lineup: 5879 1st amplifier, 5879 2nd amplifier, 12 AX7 3rd amplifier and phase inverter, and two 6AQ5's in push-pull for the power output stage. Two feedback loops are used in the reproducing amplifier: the first one is around the first amplifier stage (5879) and consists of a 0.0025 mica condenser and two 47,000 ohm 5% resistors. These values are chosen to compensate for the frequency vs. output characteristics of the head and input transformer combination. The second feedback loop is found feeding from the secondary of the output transformer to the first section of the 12AX7. This serves the purpose of providing desirable characteristics of the output stage. A tuned circuit is provided which limits the response of the playback amplifier at the bias frequency of 55 to 60 kilocycles. This is an iron core slug tuned unit and is found in the cathode circuit of the third amplifier stage.

Power Supply: A self-contained power supply rectifier furnishes the high voltage for the anode supply, the 6.3 volts ac for some heater circuits and the 12 volts dc for the input tube heater circuits. A low voltage rectifier is used to furnish direct current to a filter arrangement which, in turn, feeds the heaters of both amplifier input tubes as well as output stage driver tubes. This well filtered direct current supply leads to very low hum level in both the recording and playback amplifiers. The heaters of the 6AQ5 output tubes, as well as the 12AU7 stage used as the output of the recording amplifier, are fed from the alternating current supply. The high voltage power rectifier feeds through a resistance-capacitance filter network and other decoupling filters to the plates of the several amplifier tubes.

Meter and Meter Switch: A vu meter with its associated circuit is provided with a three-position switch marked "B," "R," and "P," indicating Bias, Record and Playback readings on the meter.

"B"—Bias: In position "B" the meter is connected through a calibrating rheostat to the record head signal coil and thus will read the bias voltage developed across this coil. The normal voltage read across this circuit is approximately 15 volts at a frequency of 55 to 60 kilocycles. The meter on the PT63-J should read "zero" at this voltage. A change of bias level over the range from minus 1.5 db. to plus 1.5 db. has been found to cause no serious change in recording characteristics.

"R"—Record: In position "R" the meter reads the recording audio level. Only generalities may be given regarding the proper operation of the recording meter for best results, but in general, it should show peaks of zero level approximately once each 5 to 30 seconds, depending upon the program material. Only rarely should the meter be allowed to swing over zero and then only for a short period of time, if best results are to be had in the recording. The meter will not be damaged by a continuous overload

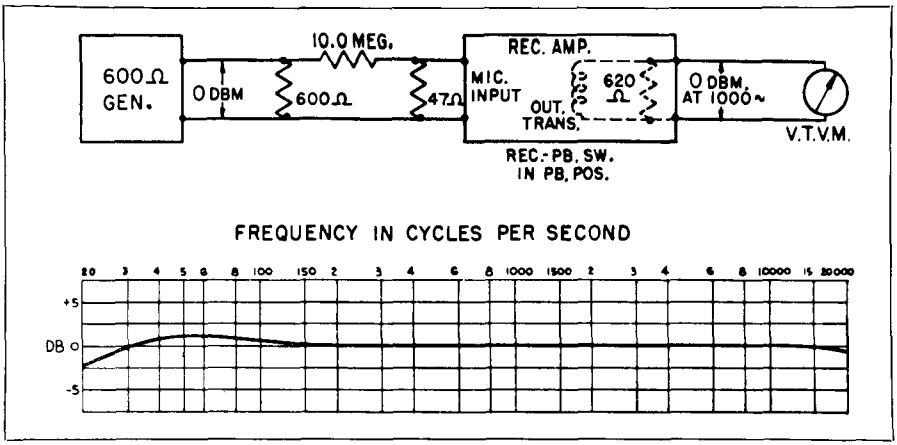

Fig. 12-40. Gain vs. frequency characteristics of the PT63-J "recording" amplifier.

amounting to twice the normal full scale reading.

"P"—Playback: In position "P," the meter is connected to read the level out. A "zero" level reading on the meter indicates a level of plus 4 dbm. available at the 600 ohm output.

Headphone Jack: The headphone jack is connected in parallel with the meter switch and consequently the signal feed to a pair of phones connected here will be the same as that being read on the meter. In "B" position where the meter is reading the bias level, no signal is fed to the headphone jack. Connecting the headphone jack to an external amplifier will make possible an "A-B" test on an external loud speaker.

A gain vs. frequency characteristic of the "recording" amplifier is shown in Fig. 12-40. The noise output from the recording amplifier should not exceed 50 millivolts. Both of these measurements should be made with maximum gain in

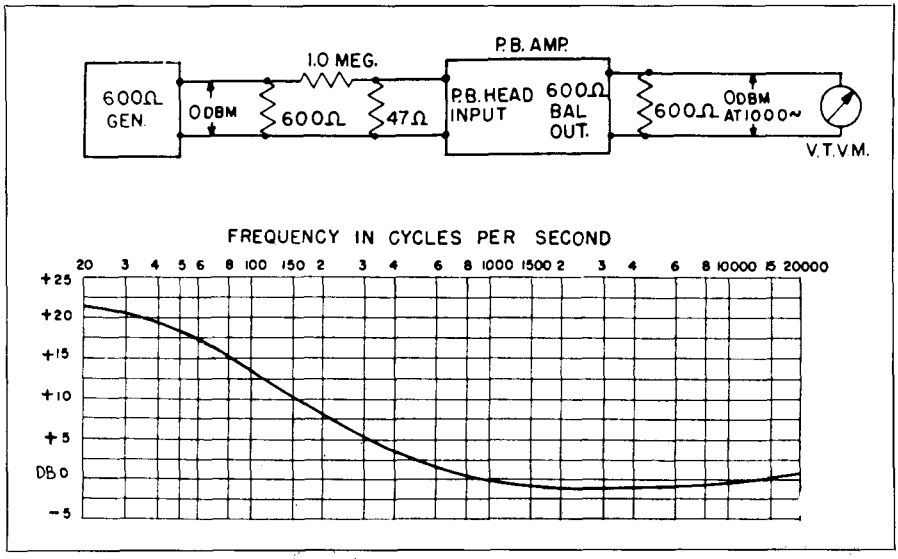

Fig. 12-41. Gain vs. frequency characteristics of the PT63-J "playback" amplifier.

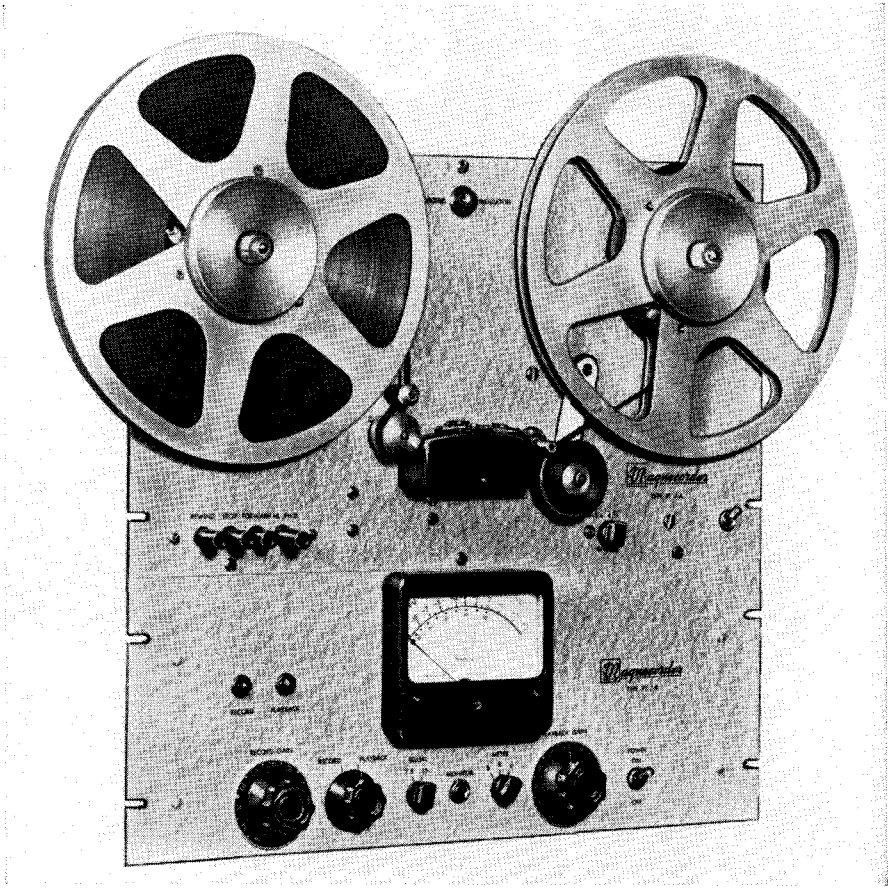

Fig. 12-42. Magnecorder PT7-AX and PT7-C rack-mounted combination. (Courtesy Magnecord Inc.)

the recording amplifier while reading the voltage across the output transformer with the record-playback switch set on playback. A sensitive vacuum tube voltmeter should be used for the noise level measurements. To achieve the lowest noise it is necessary that the microphone input be both shielded and terminated. For this purpose the best arrangement consists of a *Cannon* plug with the terminating resistor, which may be of any value between 47 and 68 ohms, contained inside the plug housing.

A gain vs. frequency characteristic of the "playback" amplifier is shown in Fig. 12-41. The noise output from this amplifier should not exceed 25 millivolts with maximum gain and a termination applied to the input as outlined above. This voltage must also be measured using a sensitive vacuum tube voltmeter.

The playback amplifier, Fig. 12-42, will furnish an output of 6 dbm. (db. referred to one milliwatt in 600 ohms) at the 600 ohm terminals when the meter is reading zero level. The maximum level which is available at this output with less than 1% distortion is approximately plus 12 dbm.

Magnecorder PT7 Recorder Series

This new transport mechanism, PT7-A, employs three heads for erase, record and playback. Each can be individually replaced or aligned. They are

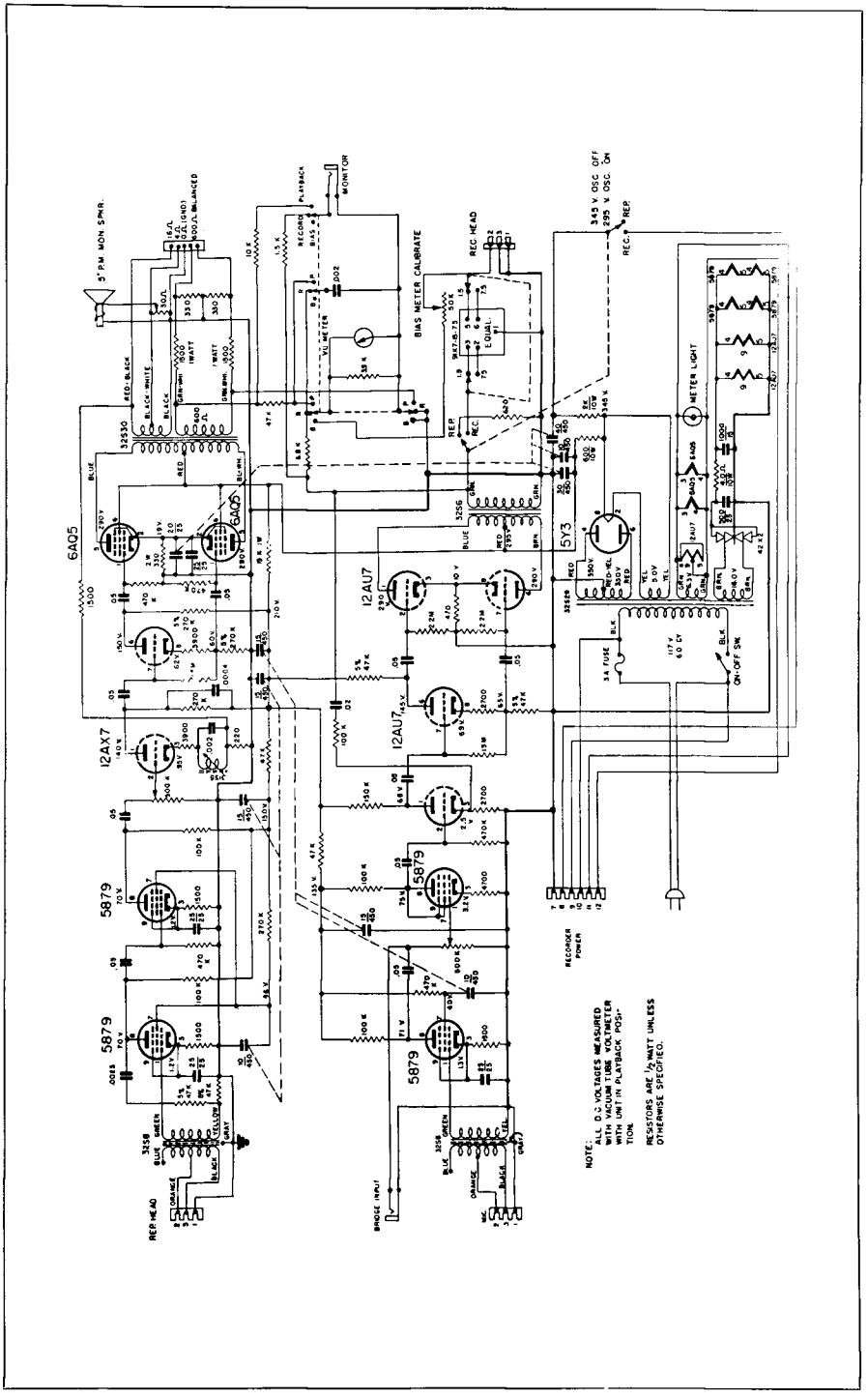
5" P.M. MON. SPKR.
6A05
12AX7
5879
12AU7
5Y3
32S30
32S6
32S8
32S9
REC HEAD
REP HEAD
BRIDGE INPUT
BIAS METER CALIBRATE
VU METER
METER LIGHT
RECORDER POWER
ON-OFF SW.
3A FUSE
117 V 60 CY
NOTE: ALL D.C. VOLTAGES MEASURED WITH VACUUM TUBE VOLTMETER WITH CAT IN PLAYBACK POSITION.
RESISTORS ARE 1/2 WATT UNLESS OTHERWISE SPECIFIED.

Fig. 12-42.

Fig. 12-43. Magnecorder PT7-CC with (PT7-AX, PT7-C and Case). (Courtesy Mognecord Inc.)

triple shielded to eliminate crosstalk or hum. A new positive drive speed reducer employing a non-slip mechanism provides perfect timing for program purposes. The PT7 series may be rack mounted or inserted in a studio console. Fig. 12-42 shows a combination, comprising the PT7-AX and the PT7-C amplifier.

The frequency response of the amplifier is flat ±2 db. from 40-18,000 cps. Record and playback amplifiers provide tape response flat from 50-15,000 cps ±2 db. at 15 inches per second tape speed and 50-7500 cps ±2 db. at 7.5 inches per second. The signal/noise is rated over 55 db. using NARTB measurement standards. A meter switch selects meter readings of bias, record or playback output. Parallel headphone jacks with switch provide line or tape monitoring and an equalization switch selects proper equalizing for 7.5″ or 15″ tape speed.

Magnecorder Studio Console Combination

The Model PT7-CC Magnecorder, Fig. 12-43, includes the PT7 recorder mechanism in conjunction with a choice of a PT63-J, PT7-C or PT7-P amplifier. This combination features two flywheels and double filter, driven by a flexible Neoprene gear-tooth coupling that assures accurate timing without slippage or wear. The functionally designed units are housed in a beautifully finished wood cabinet that has a Formica top with chrome trim. The same combinations are available in a one-case portable.

Conclusion

Many representative types of tape transport mechanisms have been shown in the above paragraphs. Developments in the field of magnetic tape recording continue to set a fast pace. Refinements will, of course, be added to the mechanisms but basically the essential designs and performance will remain the same.

CHAPTER 13

Magnetic Film Recorders

Mechanical and electrical requirements and methods for producing magnetic sound tracks in synchronism with motion pictures.

● The theory and practice of recording and reproducing motion picture film having a magnetically coated sound track was discussed in Chapter 3. Further developments have resulted in several new techniques employing modifications, new standards and precision equipment. Several of the more widely-used magnetic recorders for motion pictures are discussed in the following paragraphs.

WESTREX RA-1467 PROFESSIONAL MAGNETIC-RECORDING SYSTEM FOR USE WITH 35-, 17½- and 16-MM FILMS

The *Westrex* Magnetic-Recording System described,[1] is an evolutionary development of the application of magnetic-recording techniques for motion picture purposes. In previous papers presented before the Society of Motion Picture and Television Engineers[2,3] complete descriptions have been given of the various supplemental magnetic-recording facilities which have been made available to the motion picture industry by *Western Electric Company* and the *Westrex Corporation.* The widespread use of these modified photographic recorders has provided an unusual opportunity to evaluate the performance under actual field conditions of the various circuits and mechanical devices incorporated in these modifications. In the design, therefore, of this completely new magnetic-recording system, those elements have been retained that have proved to be of definite value, while others that have proved superfluous have been eliminated.

It was stipulated that the new magnetic-recording system should be capable of being operated with any of the known motor systems commonly employed in the motion picture industry. These include single-phase and three-phase synchronous, ac and dc interlock, as well as multiduty operation.[4] The motor-control circuits of the recorder should be arranged so that in order to change from any one motor to another, it is only necessary to disconnect and remove the motor, replace it with the other type and reconnect it with a minimum of effort.

[1]G. R. Crane, J. G. Frayne and E. W. Templin, "A Professional Magnetic-Recording System for Use with 35-, 17½- and 16-MM Films," Jour. SMPTE, vol. 56, pp. 195-309, Mar. 1951.

[2]Lewis B. Browder, "Direct-positive variable-area recording with the light valve," Jour. SMPE, vol. 53, pp. 149-158, Aug. 1949.

[3]G. R. Crane, J. G. Frayne and E. W. Templin, "Supplementary magnetic facilities for photographic sound systems," Jour. SMPTE, vol. 54, pp. 315-327, Mar. 1950.

[4]A. L. Holcomb, "Motor systems for motion picture production," Jour. SMPE, vol. 42, pp. 9-33, Jan. 1944.

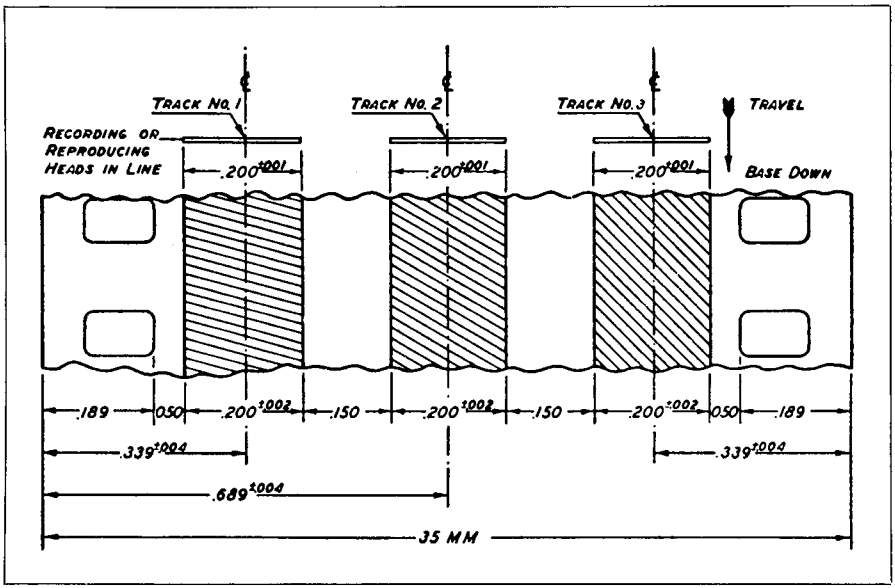

Fig. 13-1. Proposed magnetic film-track standards.

Before establishing a suitable sound-track position for this system, it was decided to adhere to what may become an industry-wide accepted standard. To this end, there has been active cooperation with the *Motion Picture Research Council* and the Magnetic Subcommittee of the *SMPTE* to try to establish a single- and multiple-track standard for 35-, 17½- and 16-mm films. Unfortunately, the proposals of both of these organizations have not yet reached the stage of complete standardization, but the response of the great majority of equipment manufacturers and recording studios has been so favorable that it was decided to proceed on the assumption that they would eventually be accepted as standard.

The *American Standards Association* and the *Research Council* track proposal is shown in Fig. 13-1. It provides for three 200-mil tracks, with a separation of 150 mils between tracks and a 50-mil separation between outer tracks and sprocket holes. Track No. 1 on the left of the figure becomes the normal single track, and it will be noted that it is the so-called negative sound-track position. It differs from the original track location previously described in that it has been moved in from the 136-mil separation from the sprocket-hole side to the present 50 mils. This was done to permit the later development of multitrack recording in accordance with Fig. 13-1. It should be noted that although the recorder described is designed to meet the new proposed track standard, provisions are incorporated for restoring the older track location when desired.

The situation with regard to 17½-mm film track standards is not as clear as with 35-mm film track. The original proposal was to record down the slit edge of this film. This would correspond to a positive sound-track position for this film. A later proposal called for the 17½-mm track to be in an identical position with that of the 35-mm film. In the recorder described, provision has been made to record the 17½-mm track at either of these positions, and experience alone can tell which is more likely to be adopted on an industry-wide basis.

The track position for 16-mm film has been set at 6 mils from the unperforated edge. In all three cases, the track width

is 200 mils and the same recording head is used for all three positions.

It was decided that provision for high-speed film runback should be available in this system. This was considered a necessity in the foreign field and a desirable accessory in the domestic field. An actual runback speed of 3X has been provided in the system described. As will be seen later, this is accomplished without unthreading the film in the recorder.

Recorder

The recording machine has been designed primarily for portable use as a production recorder for magnetic sound in synchronism with a motion picture. The machine and its control features are readily adaptable to any of the current types of motor-drive systems including interlock, multiduty and synchronous, either 1 ϕ, 115v or 3 ϕ, 220v. In addition it may be readily equipped for operation with 35-, 17½- or 16-mm film which changes only a few parts of the recorder, such as rollers, sprockets and reel shafts.

Recorder Film Path

The film drive is of the *Davis* type, which was discussed in a paper published in the Journal,[5] and consists of two 16-tooth sprockets with a symmetrical, tensioned path between them, which includes two filter rollers and an impedance drum within which is located the record head. The path also includes a slight wrap around a monitor magnetic head beyond the drum, and a roller which may be replaced by an optional erase head just ahead of the drum. The film-

[5]C. C. Davis, "An improved film-drive filter mechanism," Jour. SMPE, vol. 46, pp 454-464, June 1946.

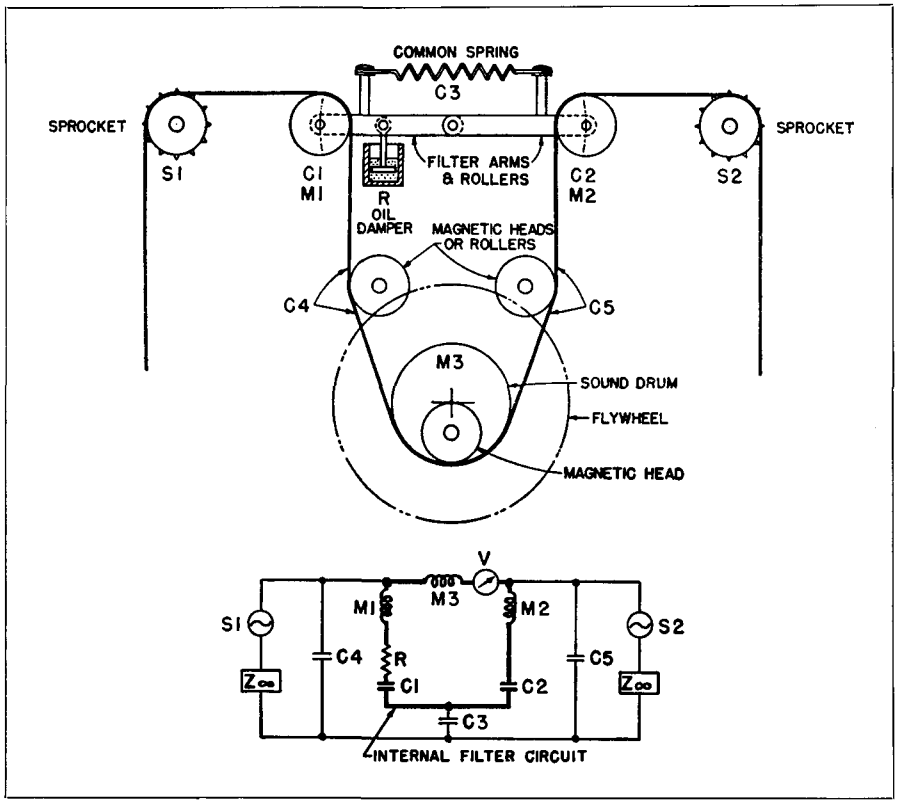

Fig. 13-2. Film path schematic and equivalent electrical circuit.

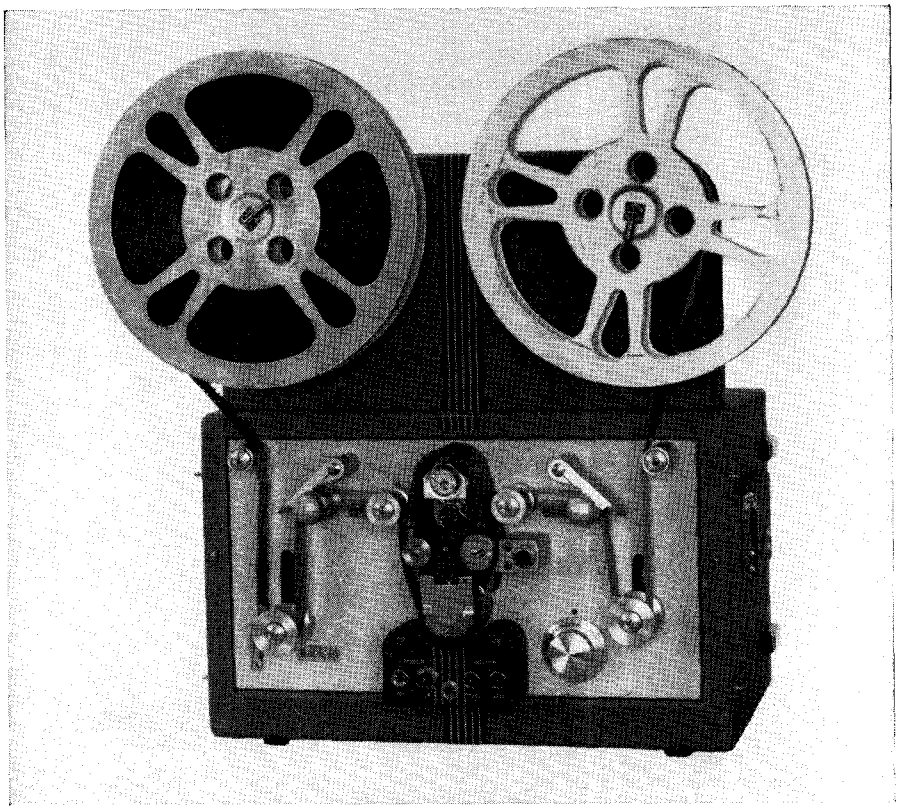

Fig. 13-3. Front view of RA-1467 recorder with cover of head assembly removed. (Courtesy Westrex Corp.)

path schematic and its equivalent electrical circuit are shown in Fig. 13-2. This method of mechanical filtering is, of course, in effect a low-pass filter and the damping is provided by an oil dashpot connected to one arm to give approximately critical damping at its natural resonant period of about 1.6 sec.

The film path and its elements are essentially the same for 17½- and 16-mm film. In the case of the narrower film widths, the lateral position of the magnetic heads is not changed and the roller flanges are placed so that the film is properly registered with the heads for correct track position. In the case of 17½-mm film, the track may be recorded either adjacent to the split edge of the film or in the *Academy* proposed-standard position.

Fig. 13-3 shows the front of the machine with the cover over the magnetic heads removed. Two shock rollers are provided over which the film passes coming into the feed sprocket and leaving the holdback sprocket. These rollers have relatively low inertia and are controlled by a spring and a single oil dashpot. They protect the film sprocket holes from abuse, particularly when the machine is started or when there is any abnormal operation such as jerks or erratic motion imparted to the film by imperfect reels. The right hand shock roller serves also as an "antibuckle" device or indicator of loss or take-up tension. The details of this function will be described later.

The film sprockets have relatively large teeth which fit rather closely into the sprocket holes and take advantage of

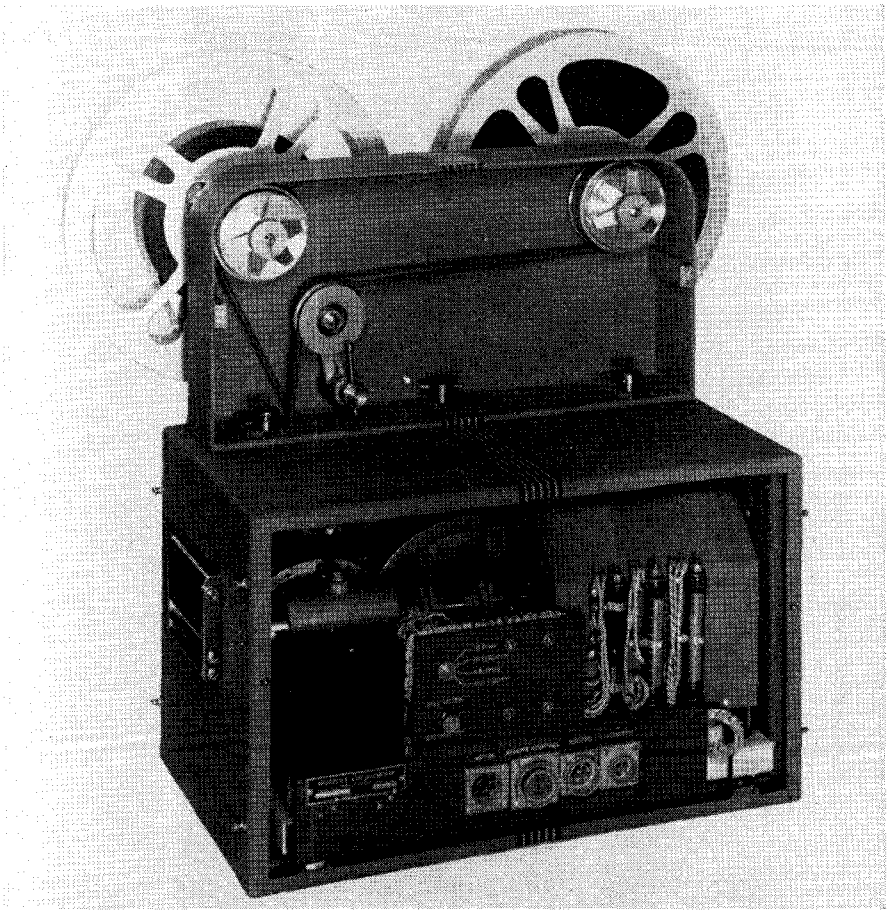

Fig. 13-4. Rear view of the RA-1467 recorder. (Courtesy Westrex Corp.)

the low-shrinkage characteristics of the new acetate-base film. The tooth clearance in the hole is still sufficient to permit satisfactory operation with moderately shrunk film as high as 0.6%, but the clearance is small enough to eliminate most of the so-called crossover effect caused by the changing film tensions on the two sides of the sprocket causing the sprocket to act alternately as a feed and holdback sprocket. Both sprockets have flanges as an aid to rapid threading and this has permitted the use of a simple film shoe instead of the usual sprocket pad-roller assembly. This shoe is adjusted so that it clears the film surface during normal operation. It serves only as a guard for such conditions as starting and stopping the equipment. Each sprocket also has a knob by which the machine may be turned over when the selector knob is in the "Neutral" position. Since the motor is disengaged, this feature is particularly useful in cases where the machine is used as a dubbing reproducer and a start mark must be registered without disturbing the position of the interlock motor.

The film passes in and out of the machine to reels located above, with a single, round belt driving both reel shafts, which may be seen in Fig. 13-4. Convertible overrunning-clutch assemblies are provided to permit either reel to rotate in either direction to meet the varying practices with regard to direc-

tions of rotation of feed and take-up reels now prevalent in the industry. The same belt may be used with alternate crossed paths to change the rotation.

Recorder Controls

The motor is controlled by a dc relay of the mechanical-latch type with push buttons for start and stop. This system has the double advantage of having no power in the relay during operation of the machine, thereby simplifying the magnetic shielding problem and providing a convenient method for controlling the recorder remotely with momentary-contact switches carrying only relay-coil current.

The machine functions are controlled by a single selector knob on the front, as shown in Fig. 13-3. It is mechanically linked to the gear box for speed selection. It operates a microswitch for speech and bias disconnect during playback and rewind, and also disables the antibuckle device during rewind. Erase facilities are controlled in a similar manner if used.

The shock roller which is used for indication of take-up failure occupies the same position at rest and at take-up failure; therefore, the operating circuit is not energized until 3 sec. after start. A time-delay relay across the motor circuit performs this function as well as operating the relay to transfer the recordist's monitor from direct to film monitor after 3 sec. from start. In addition, the delay relay has contacts closing after 1 sec. to short resistors in the motor line to reduce the high acceleration of certain types of synchronous motors. All relays are, of course, reset instantaneously when power is removed.

In the event of take-up failure, the motor is lifted from the line and the main transmission circuit is disabled which removes the signal from the mixer's volume indicator and the direct monitor line. Since the recorder is stopped, film monitoring is also terminated. The buckle condition is restored only by operation of the recorder power switch to "Off," but the motor is not reconnected to the line until the motor "Start" button is again operated.

To provide the proper correlation of the synchronous-motor starting resistors, the time-delay relay voltage requirements, and other circuit functions, a four-position switch with a screwdriver-slot control appears on the rear panel of the recorder. This switch is set to the indicated position for any one of the various types of motor systems, thereby making all of the necessary circuit changes.

Recorder Structure

The upper assembly of the recorder containing the two reel shafts is removable from the recorder case by three thumbscrews. The take-up belt is pushed back into the recorder and covered with a sliding cover. Space is provided in the control unit for containing the reel assembly when the system is to be transported. The recorder case has a removable rear cover for access to the motor-starting resistors and other components, and contains a recessed opening through which all of the cords may be inserted into the recorder receptacles. A front cover with a transparent window is used primarily for a dust cover during stand-by or for shipment. It is also useful in those cases where the recorder is to be operated near the action, thereby requiring further reduction of recorder noise and that caused by the film engagement on the sprockets. An accessory magazine is also available for completely enclosing the two film reels for further reduction of noise caused by film scuffing on reel flanges. This magazine is demountable and has transparent doors for visibility.

Mechanical Drive

As previously mentioned, various types of motors may be accommodated and the one selected is directly coupled through a torsionally rigid, flexible coupling to a gear box.

Between the gear-box output shaft and a cross shaft, interchangeable sets of 90° helical-change gears are used to accommodate all currently used motor

speeds from 1000 to 1800 rpm for either 35-mm or 16-mm film speeds. The cross shaft drives each of the two sprocket shafts through similar 90° helical gears. Each of these three sets of gears has a nylon plastic gear driven from a steel gear which gives quiet and smooth operation. Nylon was chosen as the nonmetallic material since it has unusual properties suitable to this application. It is capable of running with virtually no lubrication and performs very well over long periods of time with a minimum of lubrication provided by a drop or two of a special oil which clings to the tooth surfaces with high tenacity. The material is extremely tough and accepts considerable abuse in shock loading without damage.

The gear box accomplishes a 3:1 speed change by means of planetary gears and the ratio change is accomplished by a spring-loaded control rod protruding from the center of the driven shaft.

The take-up clutches associated with each reel shaft contain over-running clutches as well as a frictional drag to the frame of the machine, so that no attention need be given to the take-up performance regardless of the direction or speed of the recorder. The take-up clutch provides the proper film take-up tension on the reel which requires it, and a second small clutch places a light drag on the feed-reel shaft to insure stable operation.

The impedance drum, the two sprocket-shaft assemblies and the pad-roller assemblies have their ball bearings contained in tubular subassemblies so that their lateral position may be easily adjusted and locked by means of set screws. All rollers have their shafts arranged so that they may be likewise adjusted laterally. These facilities permit changes and alignment adjustments in film-path components to be readily made with a minimum of effort. Until track positions are more universally standardized and accepted, this feature may be useful.

The head assembly containing the two magnetic heads, or three in the case of the erase option, may be removed as a complete unit and replaced on dowel pins without disturbing any of the head adjustments relative to the impedance drum. The wiring between the magnetic heads and the recorder is terminated through a small symmetrical seven-pin plug arranged to permit a 180° turnover. This reverses record and monitor connections so that the monitor head may be used in the rare event of failure at the record-head position or the record head may be used for high-quality reproduction as in the case of transfer machines or high-quality playback. The record and monitor heads have mountings equipped with vernier-screw adjustments for setting azimuth quickly and accurately, and the solidly mounted record head has a vernier adjustment for its position relative to the impedance drum and the film. The head curvature lying within the film curvature determined by the impedance drum insures excellent contact with the magnetic coating and its position is such as to insure a long period of service without requiring any readjustment for wear compensations.

Transmission System

An over-all block schematic of the system is shown in Fig. 13-5. The three basic units are shown: the Recorder, the Mixer and the Control Unit. The control unit is normally associated closely with the recorder and connected to it by two 10-ft. interconnecting cables. The motor cable also connects directly between the recorder and control unit when a 115-v, 1-ϕ drive motor is used. Only one interconnecting cable is required between the mixer and the control unit. The separation between these units may be 50, 100 or 150 ft. with no special provisions required for normal variations in power-supply voltage and voltage drop in the interconnecting cable. An additional cable from recorder to studio facilities may be used to provide motor start-stop controls, speed signal and footage-counter control at remote points.

The transmission system is built up of combinations of three basic types of electronic subassembly components: an am-

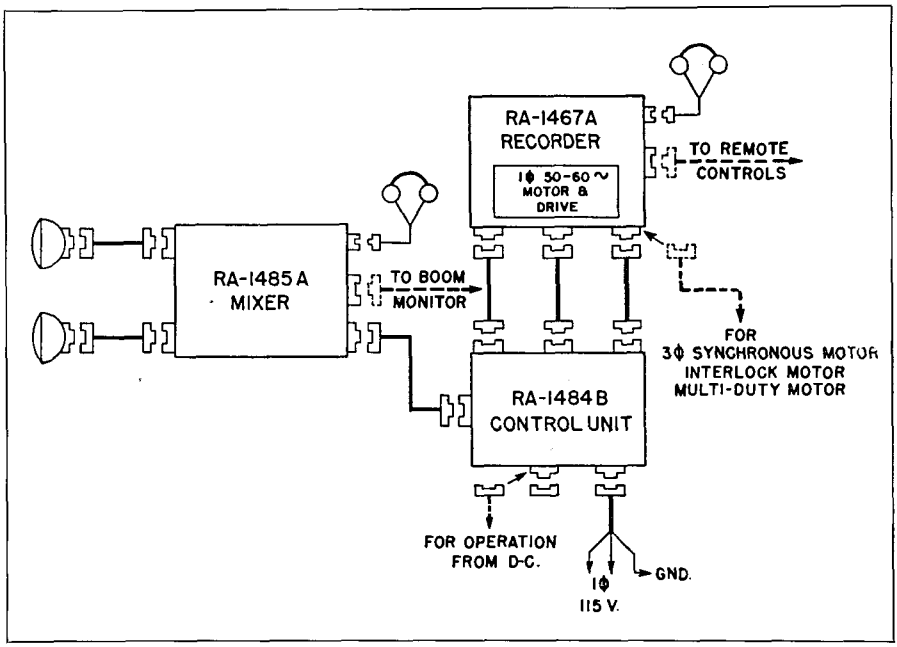

Fig. 13-5. Block diagram of the system.

plifier, an oscillator and a power supply. This method of building up the system from a minimum number of standardized types of subassemblies has several advantages, including economy of manufacture, simplicity of maintenance and a minimum investment in studio plant and location spares.

Amplifier

Only one type of amplifier is used throughout the recording system. A total of four are used in the system, one each for the two microphone preamplifiers, one for the main recording amplifier and one for film monitor. Only one type of vacuum tube is used in all the amplifier applications—the *G.E.* 12AY7 miniature twin triode. The special performance requirements for the particular amplifier applications are all accommodated by a series of plug-in units which make connections to internal circuits of the amplifier.

With suitably filtered power supply for plates and heaters and with a reasonable amount of selection of tubes for the input stage, a noise level of approximately —125 dbm., referred to the amplifier input, may be obtained. This permits a signal-to-noise ratio of approximately 55 db. for normal dialogue pickup from a *W.E.* RA-1142 Microphone.

The amplifier will carry an output power level of +22 dbm. for 1% distortion which provides a comfortable margin over that required for both recording and monitoring applications.

The power requirements are 10 ma (milliamperes) at 275 v dc and 0.3 amp at 12 v. A dc or rectified ac heater supply is recommended for all low-level applications.

Bias Oscillator

The oscillator is of the L-C tuned-grid type, operating at 60 kc and employing one 12AU7 twin triode operating in push-pull. The total distortion appearing at the oscillator output terminals is less than 1/10 of 1%. The oscillator will deliver at least 35 ma at 60 kc into the record head. The power requirements are 6 ma at 275 v dc and 0.15 amp at 12 v ac or dc.

Power Supply

The power supply provides line-and-load-regulated plate current and unregulated heater current for the entire system. It requires 1 amp from a 50- or 60-cycle 115-v power source.

The circuit includes a 3-stage dc amplifier and a series regulating tube. Regulation over a line-voltage range of ±10% and a load range of 0 to 55 ma is obtained with a maximum of not more than 0.5 v variation in output. The total power-supply ripple is approximately 0.5 mv or less over the complete load range. The ac impedance of the output is also held to a very low value, thus simplifying the decoupling requirements between stages of an individual amplifier as well as between high- and low-level amplifiers. The output voltage is adjustable over a range of 255 to 300 v but is normally intended to be set to 275 v.

A bridge-type selenium-cell rectifier is used to provide 12 v dc for vacuum-tube heater and relay control circuits. This supply is biased 20 v above ground which makes the vacuum tubes in low-level stages less sensitive to residual power-frequency ripple and simplifies the filtering requirements. This supply provides 1.8 amp at 12 v with a ripple less than 1 v. For a ±10% variation in power-supply voltage and for mixer cable lengths up to more than 100 ft. the voltage at the heaters is within safe operating limits without special regulating or current-limiting provisions.

Mixer

The mixer is a complete speech-input equipment having two microphone inputs and supplying signal directly to the recording head, direct-monitor lines and volume indicator. Fig. 13-6 is a view of the mixer.

Three of the basic amplifiers previously described are used in the mixer, two as microphone preamplifiers and one as the recording amplifier.

Fig. 13-6. Front view of the RA-1485-A mixer. (Courtesy Westrex Corp.)

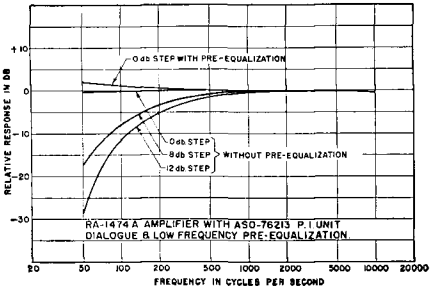

Fig. 13-7. Preamplifier gain-frequency characteristics.

For the preamplifier application, the plug-in unit inserts variable dialogue equalization and low-frequency pre-equalization. The dialogue-equalizer characteristic is selected by a control knob on the top of the plug-in unit. The response curves are shown in Fig. 13-7. One position provides the normal flat amplifier characteristic; the other two provide, respectively, 8- or 12-db. droop at 100 cps. These characteristics follow the conventional ones that have been used for many years in Hollywood studios. Below the useful dialogue range they maintain sufficient loss so that a high-pass filter is not normally required. This is particularly the case since the low-frequency difficulties in photographic recording attributable to noise-reduction and peak-limiting operations are inherently absent.

The low-frequency pre- and post-equalization used in the system takes advantage of the energy-distribution characteristic of speech and music[6] to increase the margin between signal and residual-hum components in the reproducing or monitor system. As shown in Fig. 13-7, the pre-equalization amounts to a 2½-db. rise at 50 cps.

The design of the equalizers is such that the gain in the region of 1000 cps is essentially unchanged for all settings of the dialogue equalizer and with the low-frequency pre-equalizer in or out of circuit.

The plug-in unit also contains resistive elements which introduce attenuation in the amplifier circuits terminating therein. The gain of each stage is thereby carefully established at the value giving the best possible balance between signal-to-noise and margin-from-overload, based on the sensitivity of the microphone and the range of input level to be accommodated. The midfrequency gain of the amplifier as established by the plug-in unit is 53 db.

The amplifiers are followed by separate microphone cutoff keys, mixer pots, a combining network and a gain switch having three 10-db. steps.

Following this is the recording amplifier with its input connected for unbalanced, 600-ohm, terminated operation. The plug-in unit in this application provides two steps of midrange equalization in addition to the flat characteristic, a choice of the three conditions being selected by the control knob in the top. As shown in Fig. 13-8, this equalization consists of a rather broad peak of either 4 or 7 db. centered near 5000 cps. This boost is used on dialogue only, supplementing the rise in this same region introduced by many of the regularly used microphones. Its result is to improve the "presence" quality of the reproduced speech at the listening levels encountered under theater reproducing conditions. The gain of this amplifier is established in the plug-in unit at 58 db., and for frequencies below 1000 cps it is main-

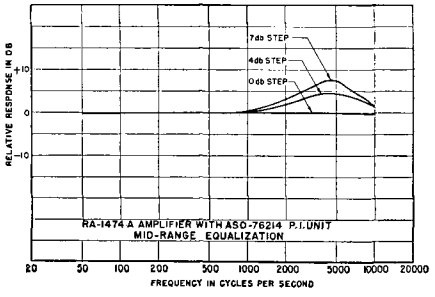

Fig. 13-8. Recording-amplifier gain-frequency characteristics.

[6] L. J. Sivian, H. K. Dunn and S. D. White, "Absolute amplitudes and spectra of certain musical instruments and orchestras," J. Acous. Soc. Amer., vol. 2, p. 330, Jan. 1931.

tained at this value for all positions of the mid-range-equalization control switch.

The 600-ohm output is partially loaded by a 1000-ohm resistor (located in the control unit) which feeds the recording head. The 1000 ohms is large compared with the impedance of the head and causes the current in the head to be substantially independent of the head impedance throughout the audible frequency range. The volume indicator is also across this 600-ohm output. The remainder of the amplifier loading is on the 50-ohm output supplying direct monitor for the mixer.

Direct and film monitor are available in the mixer. However, due to the fractional-second time delay in the film monitor, it is expected the mixer operator will normally listen on the direct line, with only occasional checking from the recorded film.

The volume indicator has a high-speed movement and new design providing increased sensitivity and less bridging loss than those previously used. Its maximum sensitivity is 0 dbm. for 0 db. meter deflection and its internal impedance is such that it may be used at this setting under operating conditions.

Control Unit

The control unit contains miscellaneous components including the bias oscillator, film-monitor amplifier, power supply and interconnecting circuits between the mixer and the recorder. It also provides storage space for the filmreel assembly which mounts on the recorder during operations. The output from the mixer is carried directly to the recorder for "recordist direct monitor" and through the 1000-ohm resistor and a 60 kc suppressor filter to the record head. The 60 kc filter prevents the bias signal from affecting the volume indicator. In the event of a film buckle or take-up failure, this direct-monitor line is shorted by the antibuckle relay described earlier. This also shorts the signal to the volume indicator and recordist direct monitor and thus serves as a warning to the mixer operator.

The plug-in unit for this application contains a continuously adjustable gain control, for balancing film and direct-monitor levels, and a reproducing equalizer. The latter has the conventional 6-db.-per-octave slope plus low-frequency postequalization complementary to the pre-equalizer and high-frequency equalization complementary to the magnetic losses inherent in the recording-reproducing process.

Space is available for substituting a bias-erase oscillator operating directly from the 115-v power source when the erasing facility at the recorder is required.

The size of the control unit was chosen to permit its use as a mounting support for the recorder during operations.

System Performance

The 100%-modulation recording level, as measured at the volume indicator in the mixer unit, is determined by making a series of measurements of output level and percent distortion at the reproducing-amplifier output for various values of recording level and bias current. A typical set of data for a particular recording head and film emulsion is

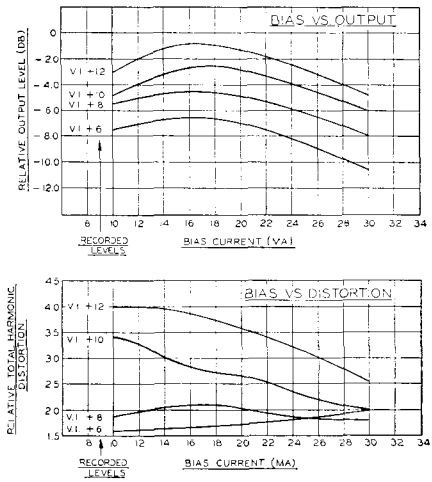

Fig. 13-9. Magnetic recording characteristics.

shown in Fig. 13-9. Based on an allowable total harmonic distortion of 3%, it can be deduced from the curves that a 100% modulation recording level of ±10 dbm., with a bias current of approximately 25 ma, is optimum. Lower recording levels give a lower reproducing level with corresponding decrease in signal-to-noise ratio. Higher recording levels require increased bias current for the permissible amount of distortion, with no appreciable increase in output level. For this optimum operating condition, a level of —4 dbm. is available at the recorder on either direct or film monitor.

By means of the mixer pots and main gain control, a 60-db. range of input level may be held to the 100% modulation level of the system. For any combination of mixer and gain settings, the carrying capacity will be limited by the film medium rather than by the transmission equipment.

The signal-to-noise ratio of the recording circuit as limited by the first stage of the preamplifier is approximately 55 db. for normal dialogue.

The over-all record-reproduce film characteristic for 35- or 17½-mm films, for flat input to the mixer and, excluding the dialogue and midrange equalization, is essentially flat from 50 to 7000 cps, which is more than ample for monitoring purposes. For high-quality recording, the flat response may be extended upward to 10,000 cps by using the film-loss equalizers, normally a part of existing photographic-magnetic re-recorders. A signal-to-noise ratio from the reproduced film of approximately 55 db. may be obtained. For special applications, this may be increased to 60 db. or more as has been done in earlier photographic magnetic equipment[2] by additional low- and high-frequency pre- and post-equalization.

Where high-frequency pre-equalization is to be utilized for this further increase in signal-to-noise ratio, an appreciable portion of it can be considered as precompensation for the magnetic and scanning losses inherent in the recording-reproducing process. These latter

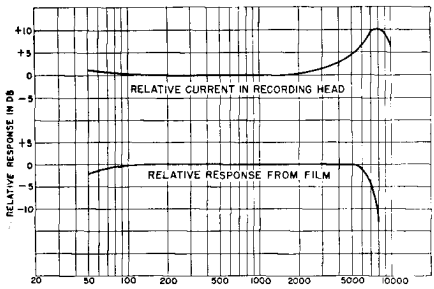

Fig. 13-10. 16-mm. frequency characteristics.

losses then introduce the compensating post-equalization to provide the flat over-all record-reproduce characteristic. Thus, if the high-frequency pre-equalization is held to that value required to precompensate for these losses, an electrical high-frequency post-equalizer is not required and flat response up to approximately 9000 cps may be obtained. For 35-mm or 17½-mm film, this pre-emphasis has been obtained by a condenser-resistance combination shunted across the 1000 ohm resistance in the recording-head circuit.

For 16-mm film, with its inherently lower cutoff frequency, a series-tuned circuit is bridged across the resistor in series with the head to provide a high-frequency pre-equalization characteristic as shown in Fig. 13-10. The response is substantially flat to approximately 6500 cps, except for the low end which contains reproducing post-equalization to compensate for the low-end pre-equalization generally used in *Western Electric* magnetic recording systems.[2]

Stancil-Hoffman Synchronous Film Recorder

The *Stancil-Hoffman* S4 series of full synchronous magnetic film recorders brings excellence of sound quality and operating convenience to the field of synchronized and recording playback for motion picture, television and Audio-Visual use.

The S4 series comprises the model S4-16 (16 mm. magnetic film recorder) the model S4-17.5 (17.5 mm. magnetic film recorder) and the model S4-35 (35 mm. magnetic film recorder). Machines for

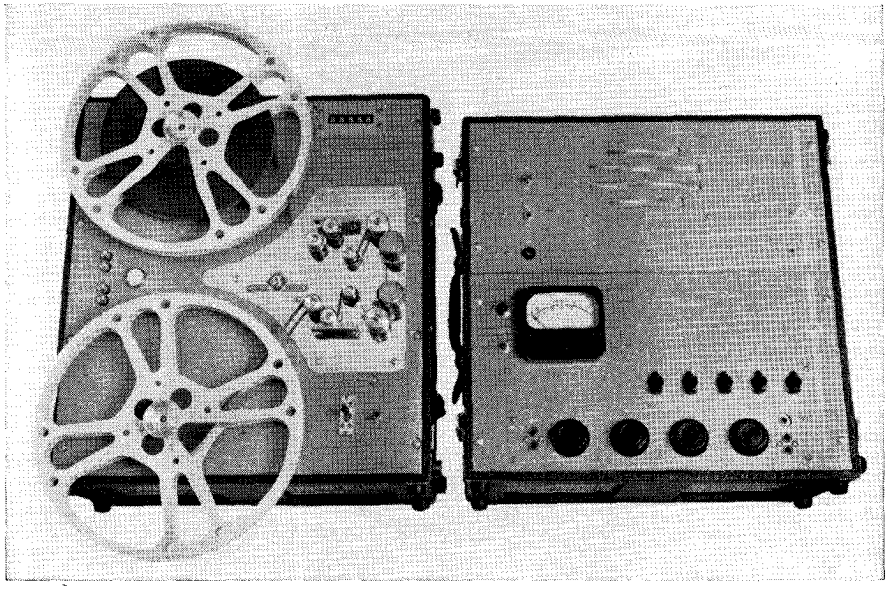

Fig. 13-11. The Stancil-Hoffman SR-Synchronous film recorder. (Courtesy Stancil-Hoffman)

all three film sizes (in 16 and 33 mm. film speeds) are also available as film playback units, designated as S4D.

These film channels feature new developments in the mechanical facilities for the operator. Each machine (Fig. 13-11) provides fast forward and rewind, normal forward, with full sprocket drive for synchronous recording or playback; and single switch reversing control which enables the machine to operate at synchronous speed in the reverse direction, without re-threading, for cueing purposes.

The drive system of the S4 series units is constructed around a new design utilizing a hysteresis synchronous motor. *No gears* are used eliminating the expense and maintenance problems inevitably encountered in gear drive devices. In addition, since gear losses are avoided, the drive system permits field operation of the units with minimum power consumption.

The mechanical filter system is the result of concentrated study of film motion problems by several well known technicians in the field. This positive, tight loop filter design eliminates 24 and 90 cycle sprocket hole flutter. It is rugged and simple, yet assures superior, low wow recordings.

By the use of an inexpensive new interlock motor, and a straight forward interlock system of new design, the S4 recorders and reproducers can be used fully interlocked, either with camera or projection equipment or with other S4 series units for multiple channel dubbing. These S4 recorders and reproducers offer the user all the facilities which have been developed for optical sound systems, with the added quality and greater economy of the magnetic process.

Electronically, the S4 series of equipment, maintains the same standards of frequency response, low noise, and minimum distortion of the *Stancil-Hoffman* transcription recorders. The same amplifiers for recording and playback, and the same magnetic heads are used. The same feature of instantaneous playback at the time of recording, long associated with the three-head non-synchronous recorders, is incorporated into the film recorder. With this convenience no producer need wait for processing to know

whether he has a good "take." Since both "record" and "playback" amplifiers have relay operated equalization change for 16 mm. and 35 mm. film, the recorder may be converted readily in the field.

The standard S4 is divided in two sections. The Electronic section contains two plug-in microphone preamplifiers and a double jack bridging input. It also contains the oscillators for bias and erase, a line amplifier furnishing from infinity to +8 VU out as well as a small power amplifier and self-contained speaker. There is mounted a 5 inch *Weston* VU meter that may be switched to indicate the correct bias setting and normal erase current. A two-position high pass filter is available to eliminate rumble, truck noises and bad acoustics. Complete switching and transfer is provided so that the operator may listen to the live material from the microphone and the material that is being reproduced from the tape. Both the line output and the monitor amplifier may be independently controlled for these A/B checks.

Included is a voltage-regulated power supply to insure proper performance regardless of fluctuating power source. The unit is designed to operate satisfactorily from a vibrator battery combination power source when required.

Model S3 Amplifiers

In many cases it is desired to rack mount the mechanical section and feed the electronic section from a 600 ohm source. The output of the electronic section feeds a 600 ohm line. In this case use is made of the S3 amplifiers (which are 5¼ inch rack chassis units) one for the recording and oscillator section, the other for the playback section. The S3 power supply is a voltage regulated unit occupying 10½ inches of rack space.

SPECIFICATIONS

Frequency Response	S4-16 (16 mm Speed) ±1 db., 45-7000 cycles per second	S4-17.5—35 (35 mm speed) ± 1 db., 45-15000 cycles per second
Playing Time	1 hour	24 minutes
Flutter	less than .2%	less than .1%
Minimum signal-to-noise and distortion through entire systems and recording	50 db. with recording level set to less than 2% total harmonic distortion.	
Input Impedance	600 ohms, balanced or unbalanced, or bridging 10,000 ohms.	
Output Impedance	600/150 oms, balanced or unbalanced, or 20,000 ohms.	
Input level	0 VU	
Output level	Adjustable from —30 to +6 dbm.	
Distortion	"0" recording level set to less than 2% total harmonic distortion.	
Control Facilities	High speed forward and rewind, normal synchronous forward or reverse (for cueing).	
Playback	Accomplished with a separate head, so that film may be monitored while recording.	
Erase	Erasure is accomplished while recording, and is at least 65 db. below "0" recording level.	

SPECIFICATIONS (Continued)

Power requirements	117 volts, ac, 60 cycles. 300 watts in *record* (maximum) condition. Drive motor leads terminated separately for field use; drive motor power consumption, 75 watts.
Installation	Mounts on standard rack dimensions with *Western Electric* mounting holes. Operates in a plane —horizontally or vertically.

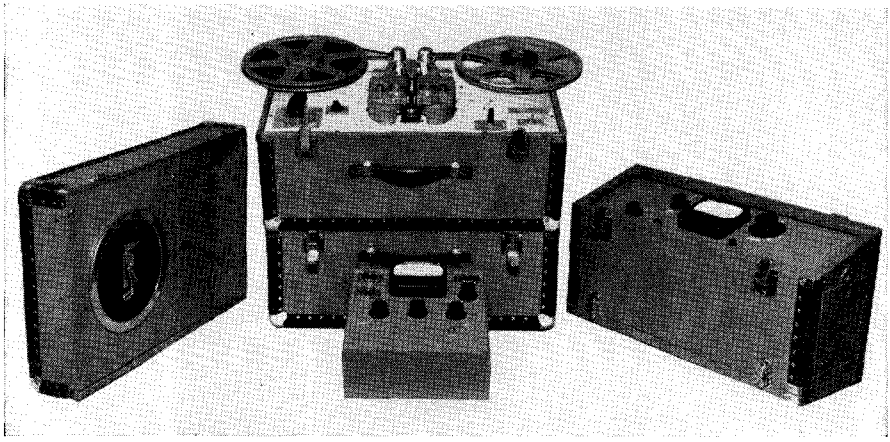

Fig. 13-12. Rangertone R-5PM synchronous tape recorder. (Courtesy Rangertone)

RANGERTONE R-5PM SYNCHRONOUS TAPE RECORDER

The previous recorders under discussion, employed conventional motion picture film, having standard sprocket holes for positive drive of the medium. The *Rangertone* portable tape recorder (Fig. 13-12) uses regular ¼″ tape, which affords an economical means for recording original sound information to be synchronized with a motion picture film. The application of ¼″ magnetic tape to sound for motion pictures has stimulated the production of accurately controlled tape movement. As a result, the constancy of tape movement makes possible piano recordings of outstanding wow free fidelity.

Editing is simplified, which in the past has been one of the chief time consuming problems in the production of sound motion picture film.

The *Rangertone* Model R-5PM has many features including variable speed, and forward and reverse rewind. The operator may move the tape forward very rapidly to the desired spot on the tape and then slow it down or move it back or forth as required. This, in conjunction with the synchronous reversible tape movement provides convenience for spotting. Tape may be moved forward at its correct speed and/or it may be instantly reversed at this same speed. A three position lever provides immediate control. In its center position, the tape is held stationary against the capstan of the synchronous motor. When the switch is moved to the right the tape moves forward instantly to the right at normal speed. If the switch is moved to the left, the tape moves backward at standard speed. A counter (equipped with a reset) registers in minutes and seconds. The counter may be fitted with a special dial to indicate corresponding film footage, either for 16- or 35 mm. film. The counter adds when the tape moves forward

and subtracts when the tape moves in a backward direction.

Dynamic or electric braking is used on the R-5PM recorder. Direct current is applied to the motor for braking, rather than by means of a mechanical clutch. It insures smooth action at all times, regardless of reel size, tape speed or the length of use.

Monitoring

Full instantaneous monitoring facilities are available for either (A) monitoring the input signals to be registered on the tape, or (B) the resulting recording on the tape as it is being recorded. Facilities are provided for either loudspeaker, headphone, or metal indication of the signals. Built-in attenuators permit adjusting incoming and outgoing signals over wide ranges. A large scale broadcast type VU meter provides instantaneous indication of recording or playback levels as well as bias and erase voltages.

Motion Picture Application

Since the effectiveness of ¼" magnetic tape for normal sound recording was evident to motion picture directors, they began to make use of the medium as a preliminary check on sound while on location. With the feature of absolute synchronism it rapidly became, not merely a standby or an intermediary, but a normal and effective way of recording sound for motion pictures. One of the features of magnetic tape is its ability to hug the magnetic heads without excessive pressure.

A unique feature introduced by *Rangertone* makes use of a separate recording of a very small portion of 60 cycle power at right angles to the normal sound recording in such a manner that one signal does not interfere with the other. A special 5-head assembly, Fig. 13-13, was developed. This right angle recording technique establishes the registry of the speed of movement of the tape with respect to the power which is simultaneously driving the motion picture equipment. The analogy is that this actually

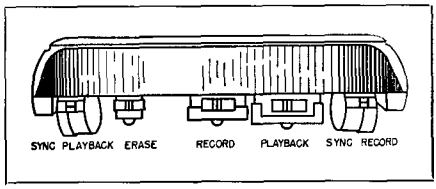

Fig. 13-13. Details of the Rangertone 5 head assembly. (Courtesy Rangertone)

constitutes "magnetic sprocket holes" for this thin magnetic tape.

Standard ¼" magnetic tape provides an economical means for recording sound to be later dubbed on motion picture film. The dynamic range of the recording assures an excellent clean cut signal. The technique employed by this method utilizes an additional synchronizing record head that records these 60 cycle synchronizing pulses whenever the operator deems them necessary. This is done while the motion picture cameras are rolling. If the sound and picture are recorded simultaneously, then the synchronizing pulses follow with the sound. It is sometimes advisable to photograph the action at one time and to make the sound recording at another. The equipment herein described is unique in its ability to permit separate recording of the sound and the synchronizing pulses.

Dubbing

Magnetic tape is a natural medium where the picture is made first and the sound recorded when the picture is projected while the actors read their lines in step with the projected picture. The technique is as follows: A short loop of the picture is made, comprising a particular scene of a length of approximately ½ minute. The actors observe the scene and read their lines against it. The tape runs continuously forward while the loop repeats over and over, as the voices of the actors are recorded on the tape. When a series of such takes are finished, the director and the cutting editor play the continuous tape back against the loop and select the best one or portions of two or more takes to determine that which is superior. It is

then re-recorded to film for the final editing. As many as forty loops in a single day, using this process, have been made.

Post Synchronizing

A reverse technique is often undertaken in which the sound is made first and then played back later for the action. In this case no synchronizing pulses are put on the first tape recording. Instead they are placed on the tape during the actual taking of the picture when the take is being played back and the actors are accompanying the sound for the filming. If for any reason the action is not perfectly synchronous, any portion of the scene may be reshot photographically and again taken for the new action. It is then possible for the cutting editor to splice various tape sections together to produce a matched film.

Synchronous Playback

For establishing true synchronism on playback of this synchronous tape recording, the 60 cycle pulses are taken from the tape, amplified and compared with the 60 cycles then being used to drive the motion picture equipment, with a film re-recorder or a projector. This automatically adjusts the magnetic tape to synchronize in step with the 60 cycles. Because the film equipment is also in step with the 60 cycles, it insures that the tape and film are moving together. Perfect lip synchronization is thus established. If for any reason, a good processing job is not first accomplished, it is a simple matter to make a rerun from the tape.

Since the synchronizing reference signal is recorded on the tape as separate track, entirely apart from the normal sound, the synchronizing signal can, at the operator's option be recorded during or after the sound track is made. This is a valuable feature for prescoring and post-recording film operations. Furthermore this synchronizing signal can be erased without effecting the sound recording, so that, if an actor "miscues" or "fluffs," a new reference signal to erase the original can be added the second time around.

Flutter

One of the most essential characteristics of any good recording is that the speed of the medium be held constant. In the case of magnetic tape, this means that the movement across the heads must be constant. In most tape driving systems, a rubber idler holds the tape against a steel capstan, driven by a synchronous motor. Flywheels act to smooth out any variation. In this recorder the makers have placed a flywheel in a most advantageous position—immediately between the record and playback heads. In addition a second flywheel is placed slightly back as a further means of stabilization. Finally, the tape is brought into the active loop and out, by using the two sides of the driving capstan, in conjunction with two rubber idlers. The resulting effect is that the tape is completely insulated from disturbances coming from the supply or take-up reels. The 120 cycle flutter, associated with any 60 cycle motor drive is completely filtered out by the double flywheel action and the tape travels over the record and playback heads at a constant rate.

ADDITIONAL CHARACTERISTICS

Footage Counter—Time in Minutes and Seconds for reel of 16 or 35 mm film. Indicates both forward and rewind footage.

Complete Monitoring and Mixing Facilities—VU Meter, Signal Indicator and 8″ Loudspeaker.

Editing Controls—Continuously variable (0 to 250″/sec.). Fast forward and rewind speed.

Dynamic Braking—No mechanical parts to wear, or get out of adjustment.

NARTB Performance—Meets all NAR TB adopted standards.

Long Playing — Approximately five hours at 3¼″/Sec.

Two Tape Speeds—Choice of 3¾″, 7½″, 15″ or 30″/Sec. Tape Speeds.

Lip-Sync Recording—Optional feature at slight additional cost.

Adjustable Bias Control—May be set for high or low coercive force tapes.

Built-In Demagnetizer—Electric demagnetizer for demagnetizing magnetic heads.

Rugged Construction—Portability but not at the sacrifice of dependabiilty.

Minimum Weight with Maximum Utility

Tape drive unit	65 lbs.
Playback amplifier (includes monitor speaker and preamplifier)	52 lbs.
Record Amplifier	37 lbs.

SPECIFICATIONS

Frequency Response:	15″/Sec.; 45 to 15,000 cps ±2 db. 7½″/Sec.; 50 to 8,000 cps ±2 db.
Distortion at Maximum Signal:	Less than 2% Total Harmonic
Maximum Signal to Tape Noise:	55 db.
Maximum Signal to Hum:	60 db.
Playing Time:	One Hour @ 15″/Sec.
Flutter (Peak to Peak):	Less than 0.1% @ 15″/Sec. Less than 0.2% @ 7½″/Sec.
Tape Tension:	6 oz. inches (Constant During Play)
Absolute Playback Accuracy:	Without Synchronization; 0.1% With Synchronization; within ±2 millisecond of reference signal
Rewind Speed:	0 to 250″/Sec. in Fast Forward or Rewind Positions
Input Level:	Into Recorder; 0 dbm. @ 600 ohms Into Pre-Amp; —50 dbm. @ 50 ohms
Output Level:	Playback Amplifier; 10 dbm. @ 600 ohms.

CHAPTER 14

Microphones

A discussion of representative microphones widely used in Broadcast, PA, Television and Recording.

● There are three fundamental types of microphones (Transducers). These are the carbon, crystal, and dynamic. Each type employs a specific fundamental principle of operation. While there are many variations on the above three types, we shall confine most of our discussion to the construction and application of those enjoying the greatest popularity.

Carbon Microphones

A *carbon* microphone functions as follows: Direct current flows through the carbon granules. As the pressures and rarefactions of the sound waves occur at the diaphragm, the diaphragm is caused to move and to press and release the carbon granules. The action is decreasing and increasing resistance within the microphone. Characteristic of the carbon microphone is its high output level and its ruggedness. It is practically unaffected by heat and humidity.

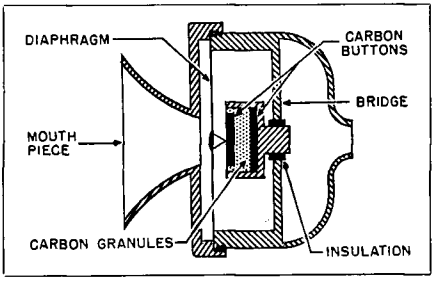

Fig. 14-1. Single button carbon microphone.

Wherever space and weight are a factor, its high output is advantageous, due to the fact that one or two preamplifier stages may be eliminated. During the war this type of microphone was widely used by the military services. It is used presently by airline and railroad companies, police, etc. The construction of the single button carbon microphone is illustrated in Fig. 14-1.

In the early days of broadcasting the most commonly used microphone for high quality pickup was the *double button carbon.* This is illustrated in Fig. 14-4A. For many years this was standard equipment with all the broadcasters and, although it had its limitations, it proved very successful until replaced by the more popular velocity, dynamic, and other types. Carbon microphones, being of the pressure type, are largely used in mobile communications. They possess extremely good response at voice frequencies. The harmonic content of a single button microphone, due largely to the non-linearity of the carbon itself, is a source of at least 10% harmonic distortion even in the more advanced types. This, however, is no handicap when we limit the over-all response to voice frequencies. Generally speaking, carbon microphones, are usually of 100 ohms impedance and are fed direct to a transformer or to a resistor input to the preamplifier.

Fig. 14-2. Shure Model 100 Diaphragm type carbon microphone. (Courtesy Shure Bros.)

Carbon Communications Hand Microphones

The *Shure* Model "100" series Communications type Microphones (Fig. 14-2) are pressure-actuated diaphragm type carbon microphones designed especially for efficient reproduction of speech. The microphones fit naturally and comfortably in the palm of the hand. They are light and compact, take minimum space in portable equipment. The microphones are equipped with a heavy duty push-to-talk switch and are available in a variety of switching circuits. The switch may be used to control the cartridge circuit and/or a remote relay circuit. The microphones are provided with a "Coiled-Cord" cable. These microphones are especially designed for military, police, mobile equipment, and other uses where ruggedness and dependability are vital factors. The frequency response is designed to produce clear, crisp, voice response.

Operation

A typical operating circuit is shown in Fig. 14-3. Also shown is a table of voltages and corresponding resistances to limit the operating current through the carbon button to 50 milliamperes. The resistance value shown in the table includes the dc resistance of the transformer primary and other wiring components. The microphone will operate satisfactorily with currents up to 50 milliamperes. However, no damage will result if currents rise to 100 milliamperes. The resistance of the carbon button is 70-80 ohms with 50 milliamperes flowing through the button. The microphone will operate satisfactorily in all ordinary conditions of temperature and humidity.

Specifications

Voltage sensitivity 5 db. below 1 volt for 100 bar signal at microphone grill. Voltage measured across 100 ohm load.

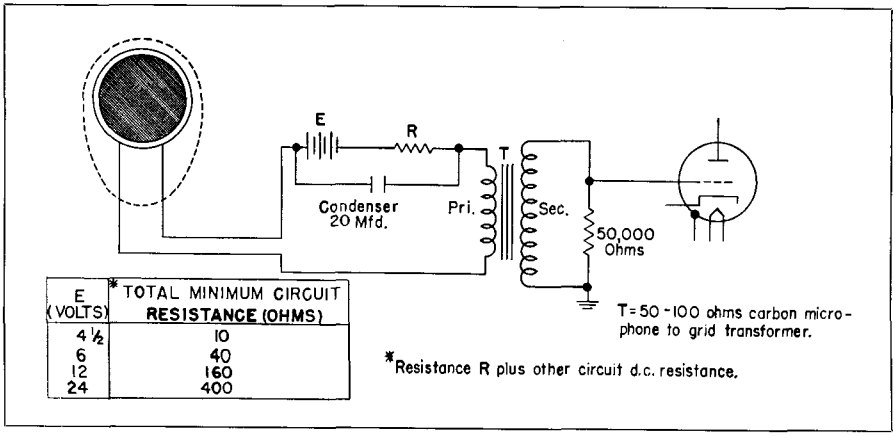

E (VOLTS)	*TOTAL MINIMUM CIRCUIT RESISTANCE (OHMS)
4½	10
6	40
12	160
24	400

Fig. 14-3. Typical input circuit for carbon microphones of low impedance.

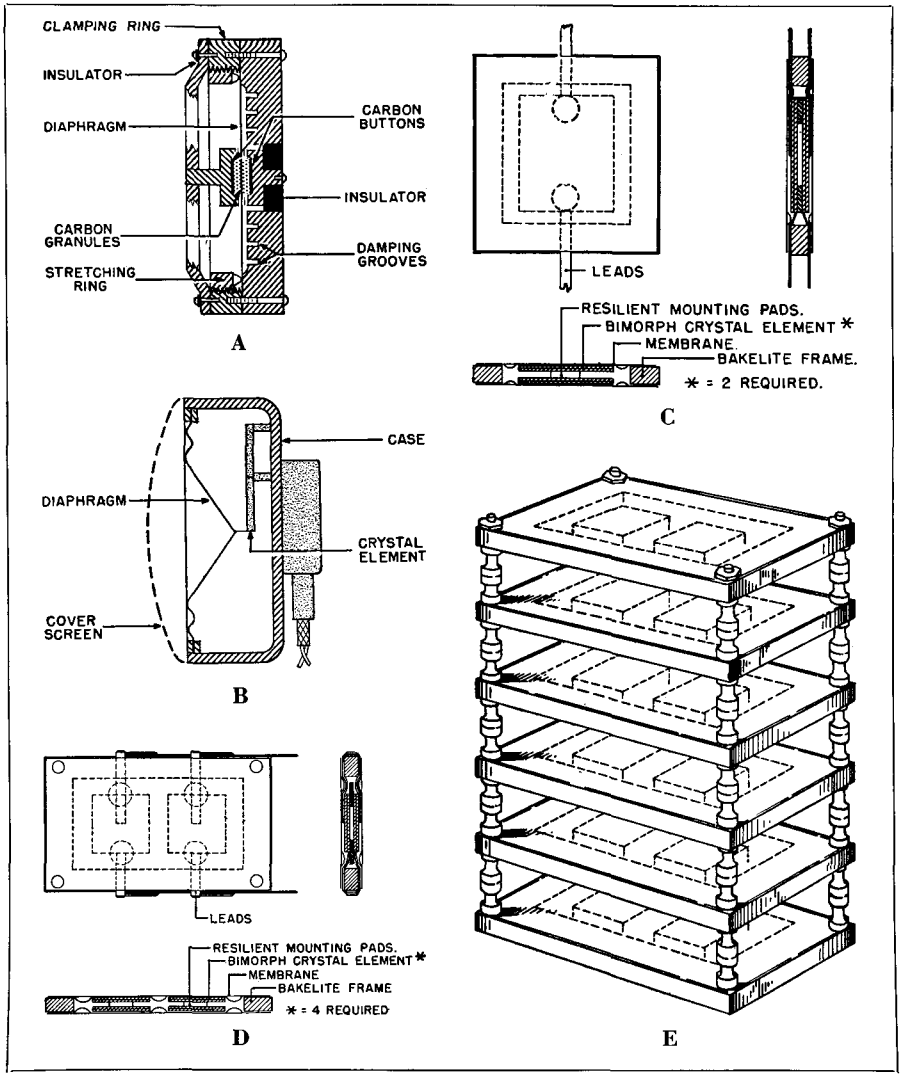

Fig. 14-4. (A) Double button carban, (B) crystal diaphragm, (C) single crystal element, (D) multiple crystal element and (E) six element sound cell construction.

Crystal Microphones

The *crystal* microphones, of which there are several types, employ bimorph Rochelle salt crystals. The crystal element itself consists of two Rochelle salt slabs which are assembled in such a manner that they respond to a bending stress. The two slabs are provided with three foil electrodes so that the assembly is capable of generating a potential between the inner and outer foils whenever subjected to a strain or bending. Fig. 14-4B illustrates the construction of a diaphragm acuated crystal with the other end of the drive pin attached to a diaphragm. The movement of the diaphragm and drive pin bends the crystal in accordance with the pressure of the sound waves. This creates an alternating potential of substantially the same wave pattern as the sound wave. A crystal microphone does not

Shure Model No. 707A Crystal Microphone. (Courtesy Shure Bros.)

require a separate voltage or current source, as is the case with the carbon microphones. The output of the microphone, accordingly, can be connected directly to the grid of an amplifier tube. The chief disadvantage of the crystal is that its operation is confined to temperatures of less than 130 degrees F. Temperatures over 130 degrees F. cause the crystal elements to soften due to excessive heat and the microphone is rendered inoperative.

The construction of the crystal microphone illustrated in Fig. 14-4B is the simplest form of crystal microphone. They are widely used as communications microphones and for the tiny hearing aid devices. A general-purpose (*Shure* Model 707A) crystal microphone is illustrated on this page.

The Model 707A Crystal Microphone is pressure-operated with smooth response characteristic from 30 to 6,000 cycles per second. Typical semidirectional pickup. Moisture proofed Grafoil Bimorph crystal. For voice and music reproduction. Suitable for low cost P.A. systems, call systems, amateur 'phone transmitters and similar applications. ⅝"-27 thread for standard desk and floor stand mounting. Furnished complete with 7 ft. single-conductor shielded cable. The inner conductor is connected to grid side of input circuit, "shield" to ground. Cable length may be extended if desired.

Specifications

Dimensions: Diameter of case, 2⅜". Length overall, 2⅞".

Finish: Iridescent gray.

Weight: Net weight, ¾ lb., less cable. Shpg. wt., 1¼ lb.

Output Level: Average level, 49.7 db. below 1 volt per bar at end of 7 ft. cable.

Recommended Load Impedance: ½ to 5 megohms. Low frequency response is best with high terminal resistance. For communications and call system, a load of ½ megohm is suggested for crisp, high-intelligibility speech reproduction.

Sound Cell Microphones

A *sound cell* microphone consists of two bimorph crystal elements as illustrated in Fig. 14-4C. These elements are assembled back to back and are enclosed within a rectangular bakelite frame, sealed by two flexible membranes. The crystal elements are held together by two resilient mounting pads located in such a manner as to provide proper damping characteristics and to separate the elements, permitting them to deflect under application of sound pressures. No diaphragms are required in a sound cell microphone since sound pressures contact the crystal elements directly.

After assembly, the completed sound cell is impregnated with wax to render it airtight and moisture-proof. The result is a small, flat, hollow box, the two major sides of which generate a voltage in proportion to the applied pressure. For sound pressures, the voltage gener-

ated by one side will be in phase with that generated by the other and for this reason are additive. In the case of mechanical shock or vibration, the voltages will be out of phase and will tend to cancel each other. Due to the linear relationship between sound pressure and voltage, amplitude distortion does not arise as is the case with practically all other types of microphones. Crystal elements used in sound cells have been designed so that their mechanical resonances are usually above the highest frequency to be reproduced. In higher quality sound cell microphones, very small and very thin crystal elements are used, in which case the mechanical resonance is just above 10,000 c.p.s. at the upper frequency range. This increased output may be found useful in compensating for the high frequency loss in associated equipment, or it may easily be compensated for true equalization.

In some microphones single "sound cells" are used as illustrated in Fig. 14-4C. In others, double "sound cells" are used as illustrated in Fig. 14-4D. Usually a number of these are stacked together to provide proper operating characteristics. Sound cell microphones have been developed for various applications. They are ideally suited to high quality broadcasting, recording, audition, and sound reinforcement applications. Generally, these are designed for connection to high impedance circuits but with special coupling transformers may be fed to low impedance lines. Each of these microphones has a substantially uniform response up to 10,000 c.p.s. Each contains six double sound cells stacked as shown in Fig. 14-4E. The connections to the cells, however, differ from some models.

Sound cells have also been used in other devices such as laboratory microphones, artificial ears, etc., where very accurate measurements are required. For these applications the response is uniform up to 15,000 c.p.s. This is accomplished by using extremely small sized crystal elements (7/32 in. sq. x .015 in. thick) in which the mechanical resonance is well above 40,000 c.p.s.

Each sound cell microphone is terminated in a three point plug-in socket. Two of the contacts are connected to the output terminals of the sound cell assembly. The third contact is connected to the case of the microphone. This permits connection to single tube or push-pull grid inputs as shown in Fig. 14-5. Since the crystal elements of the microphone are capacitive over practically their entire frequency range, it is very important that each microphone be operated into the load impedance (R) as recommended by the manufacturer. The capacity of the crystal elements will vary somewhat with temperature. However, this will have no effect on performance if recommended load impedances are used. Sound cell microphones should never be subjected to temperatures exceeding 125 degrees

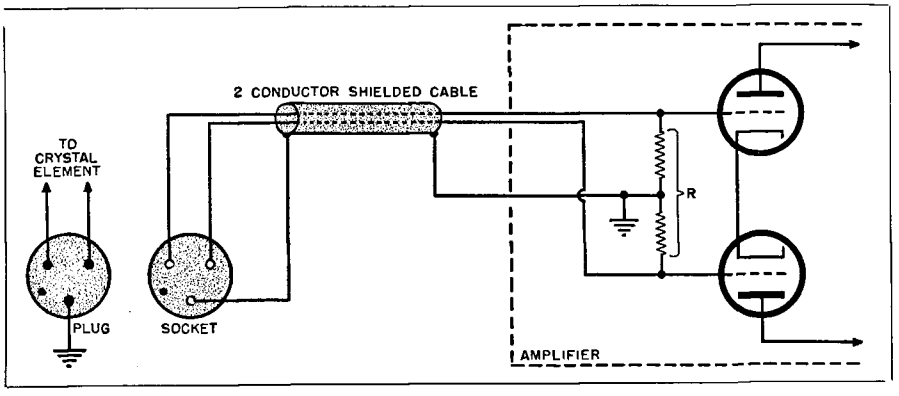

Fig. 14-5. Input connections for sound cell microphones.

F. since the piezoelectric properties of the crystal elements may be damaged permanently.

Non-Directional Microphones

Pressure microphones respond to variations in sound pressure. They include dynamic, carbon, crystal, condenser, and ribbon microphones with closed backs. These are substantially non-directional although they tend to become directional at the higher frequencies. For a microphone of 2½" diameter, directivity starts at about 2000 cps and increases with frequency. Often baffles are used to lower the frequency at which directivity begins. But, as these add some frequency distortion, the design of the microphone must be coordinated with them.

The frequency response is uniform with respect to distance from the sound source excepting, of course, the frequency distortion caused by reverberation within the room in which the microphone is used. In a hard, untreated room this effect can be serious when working more than a foot or so from the instrument. Pressure microphones usually have comparatively stiff diaphragms and are therefore not as susceptible to wind and breath.

Carbon microphones of the pressure type are largely used for mobile communications service as mentioned previously. Pressure microphones in the dynamic type are available in high impedance (25,000 ohms) for feeding dierct into grid, or 50, 250 or 500 ohms for matching a line.

Pressure microphones are excellent all-purpose instruments for conditions where room reverberation, acoustic feedback, and ambient noise are not too severe. The better quality type are desirable for broadcast announcing and remote, public address, amateur communications, and recording. They are recommended for outdoor as well as for indoor work.

Differential Microphones

This type of microphone was used by nearly all branches of the U. S. Armed

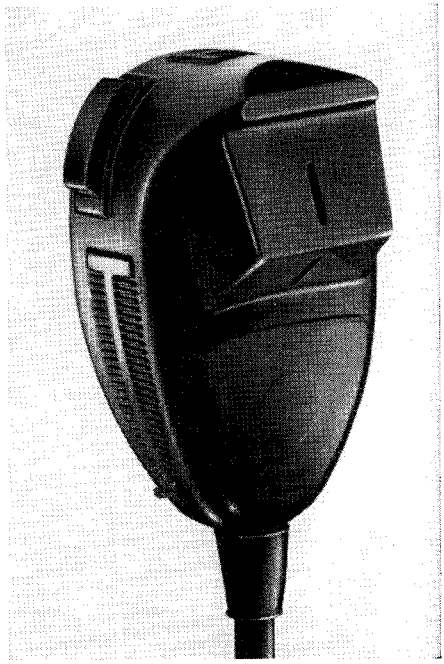

Fig. 14-6. Electro-Voice differential carbon microphone. (Courtesy Electro-Voice)

Forces in reproducing speech through high surrounding noise. The same basic principle of operation makes it highly desirable for all applications where ambient noise is 115 db. or more. The *Differential* discriminates against the distance of origin and not sound pressure alone. For example, if background noise originating from a foot or more away is the same sound level at the microphone as speech which originates one quarter inch away, the reproduced speech is from 17 to 20 db. higher than the noise, despite the fact that these two sound pressures arrive at the microphone at the same intensity. The *Differential* (see Fig. 14-6) is of the carbon type and provides high articulation and good quality reproduction. For public address applications, the *Differential* shows remarkable freedom from acoustic feedback. It is essential, however, that they be used closely, to within ¼ inch to ⅜ inch, or speech itself will be attenuated. Basically, the *Differential* is

a close talking microphone and is highly effective in reproducing speech under high ambient noise. It is ideally suited for use by railroads in their communications work. As a carbon hand-held microphone, it is used by many airlines and air transportation companies. It is also used by broadcasters for sporting events, such as boat races, where the background noise is high. The Model 205-S "Differential" is a development of the *Electro-Voice* Corporation.

Specifications

Power: 27 db. below 6 milliwatts for 10 dynes/cm² pressure.
Voltage: 10 db. above .001 volt/dyne/cm², open circuit.
Voltage developed by normal speech (100 dynes/cm²) : .32 volt.
Frequency response: Substantially flat from 100-4000 cps.
97% articulation under quiet conditions; 88% under 115 db. of ambient noise.
Weighs less than eight ounces.
Standard single button input is required.
10-50 milliamperes button current.
Molded, high impact phenolic housing. Minimum wall thickness, 5/32". Vinylite carbon retainer.
Temperature range is from —40 to 185 degrees F.
Standard circuit provides closing of button curcuit and relay simultaneously.
Thermal noise is less than 1 millivolt with 50 milliamperes through button.
Capable of withstanding impact of more than 10,000 6-inch drops to hard surface.
Frequency response does not vary more than 5 db. in any position.
5 ft. of two conductor and shielded cable, overall synthetic rubber jacketed.
Background noise is reduced 20 db. or more, depending on distances from noise sources.

Broadcast Microphones

The following paragraphs will deal with several representative types of high quality microphones designed especially for broadcast applications or for use in professional sound recording studios.

Many stations prefer velocity or "ribbon" microphones for studio work, because of their wide-angle pickup and adaptability to various applications, while dynamic or moving-coil microphones are used in outdoor or remote broadcasts where ruggedness plays a major part. Cardioids, of course, are suitable for all applications and receive a good deal of use.

The Dynamic Microphone (Moving Coil)

A good example of the moving-coil type of microphone is the *Western Electric* 618-A (Figs. 14-7 and 14-8). This microphone has long been used where ruggedness, good frequency response, and ease of handling are requisites, and is especially suited for use in the broadcasting (or public address) of outdoor events. It holds an advantage over the ribbon type in such events in that it is not so easily damaged by reasonably rough handling, is not as sensitive to "blasts" or instantaneous peaks of excessive level, is not adversely affected by wind, and, by virtue of its unidirectional characteristics, aids considerably in the reduction of background noise usually present in outdoor applications.

Fig. 14-7. Moving coil (dynamic) microphone.

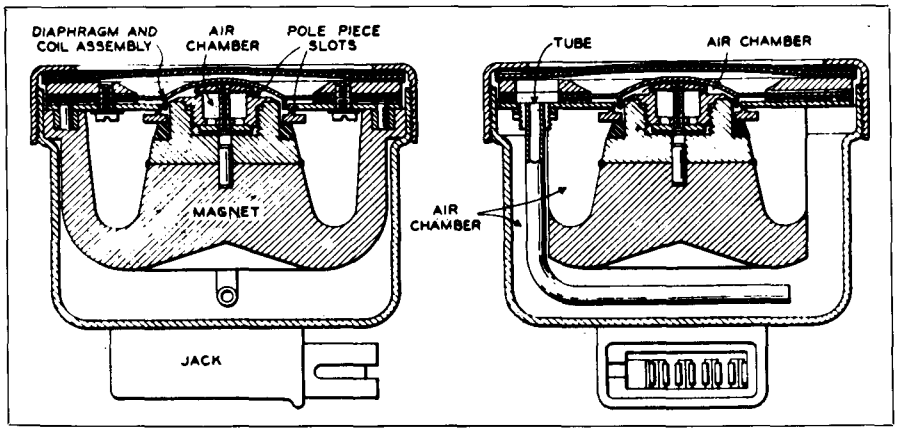

Fig. 14-8. Cross-section view of moving coil microphone.

The high-frequency response above 1000 cycles can be altered considerably by changing the degree of angle of incidence, that is, by rotating the frontal surface of the microphone in a horizontal plane so that impinging sound waves strike the diaphragm at an angle other than that of the usual zero degrees as formed by the arrival of sound waves from a point directly in front of the microphone. (See Fig. 14-9.) Low frequency response is not appreciably affected by such angular changes.

By studying the cross-sectional cutaway shown in Fig. 14-8 one gains an insight into the extreme simplicity of construction. The microphone elements are housed in a metal shell and covered with a metal grill and silk cloth to prevent damage from foreign particles and to minimize dust collection. A metal ring which screws over the housing holds the diaphragm in place. The microphone itself consists of a circular duraluminum diaphragm to which is attached a coil of aluminum ribbon, wound in an edgewise manner and suspended in the radial field of a cobalt steel permanent magnet. Movement of the diaphragm and its associated coil cuts the magnetic lines of force surrounding the magnet and generates an alternating output voltage which is proportional to the magnitude of the original sound waves.

An explanation of the improvement in frequency response of this microphone over that of previous types lies in

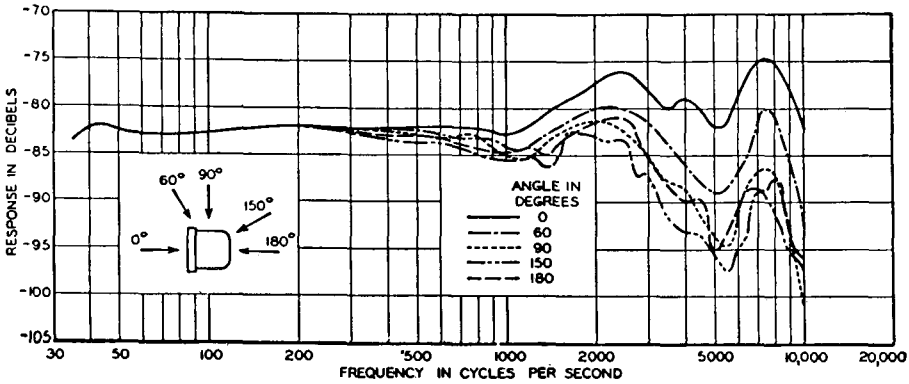

Fig. 14-9. Angular response of moving coil microphone.

the inclusion of an acoustic compensating circuit which consists mainly of a properly designed air chamber between the housing and microphone elements and an air vent tube, the length and diameter of which control the compensating action of the air chamber. These constants have been critically adjusted at the factory and should not be altered in any manner.

The output of the 618-A is approximately —84 db., and its output impedance, like that of most dynamic or pressure operated microphones, is 30 ohms.

The Non-Directional Dynamic

An improvement over the 618-A is the *Western Electric* 630-A, familiarly known as the "Eight-Ball" because of its sphere-shaped housing (Fig. 14-10).

It is well-known that any object placed in the field of either primary or reflected sound waves will cause a diffraction of those waves. When the object is a microphone, such diffraction results not only in angular distortion but, more important, causes a change of pressure of the sound waves reaching the diaphragm. The amount of pressure change is dependent not only on the angle of incidence and frequency of the approaching sound waves, but also on the physical size and shape of the microphone.

Because of a tendency to discriminate between various angles of wave frequencies above 1000 cycles, the microphone assumes a directional characteristic whose factor does not maintain a fixed value, but rather varies in accordance with changes in both the frequency and in the angle of incidence of the impinging sound waves. This action gives rise to phase distortion in the output of the microphone. Since the overall size of the microphone is one of the basic factors involved, it is assumed that this problem could be solved by decreasing the physical dimensions of the housing and microphone elements. However, theoretically, a microphone so constructed as to present no angular discrimination over the normal audio frequency range would be impractical because of its extremely small size, delicate construction, and inherent loss in output. Such a unit indicates that an additional preamplifier be used. It, therefore, holds that the shape of the housing, which is another basic factor, is the solution to this particular problem.

Tests made by engineers of the *Bell Telephone Laboratories* on the effects of various shaped objects on sound wave diffraction, produced conclusive data which resulted in the selection of the spherical-shaped housing as the best suited in reducing directional distortion.

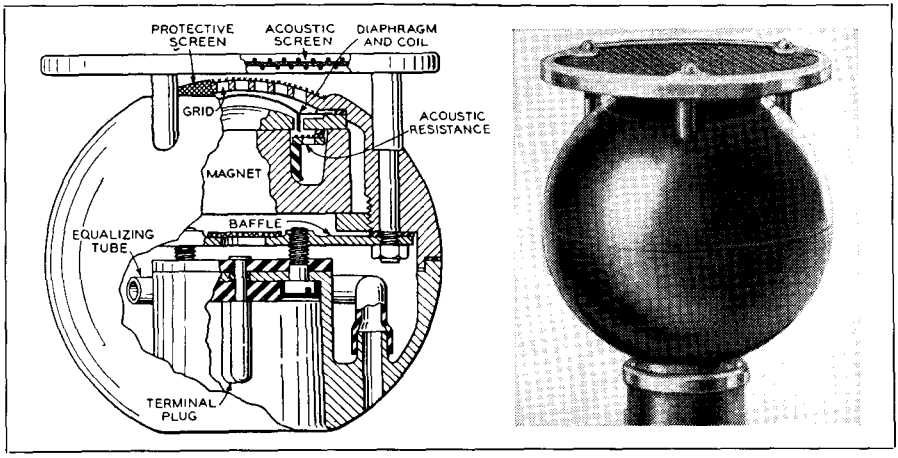

Fig. 14-10. The familiar Western Electric "Eightball" microphone.

Referring to the cross-sectional diagram in Fig. 14-10, it can be seen that the microphone is divided into two parts, with the microphone itself, comprised of diaphragm, coil, magnet, and acoustic resistance, in the top of the shell. The lower half, whose bottom section is recessed to hold the connecting terminal plug, contains an air chamber and equalizing tube. This rubber tube, cut to its proper length at the factory, is used to increase the low frequency response and to compensate for differences in air pressures inside and outside the shell. A small resistance baffle which essentially is a flat metal plate perforated by six one-half inch holes provides acoustic continuity between both sections of the housing. This baffle is used to prevent the occurrence of cavity resonance within the housing itself.

Ordinarily a microphone having its diaphragm mounted in a horizontal plane and normally facing upwards, exerts a marked tendency toward giving better frequency response to high-frequency waves reaching the diaphragm from various angles above the horizontal plane than for corresponding waves reaching it from below. This condition was overcome by the employment of an acoustic screen. This screen, two and one-half inches in diameter and surrounded by a protective metal ring, is composed of a wire mesh screening on either side of several layers of treated silk cloth, and mounted horizontally about one-eighth inch above the front of the diaphragm. By virtue of its resistance to sound waves, the screen tends to reflect waves coming from below the horizontal plane back into the diaphragm, thereby lending valuable sound reinforcement, and also acts to retard sound waves striking the screen from the front. The microphone response to varying degrees of angular sound approach is thereby made uniform.

The diaphragm is mounted as close to the front of the shell as is possible, a feature which is desirable in that the total angle of diffraction formed by the spacing between housing and diaphragm is reduced to a negligible degree, and at the same time a larger area is permitted in the air chamber behind the diaphragm. The useful amount of back-pressure thus formed is an important factor in the reduction of diaphragm vibration impedance. Protection of the diaphragm is afforded by a grid which is so designed as to offer added improvement in high-frequency response. Covering this grid is a screen of silk cloth which protects the diaphragm from possible damage from iron filings, dust particles, and other foreign matter.

Frequency response of this microphone is essentially flat from 40 to 10,000 cycles, without regard to angle of incidence.

Output of the 630-A is approximately —87 db., or 3 db. below that of the 618-A, but this slight disadvantage is more than offset by its improved frequency, response, lighter weight, compactness, and adaptability to a wider variety of uses.

The Velocity Microphone

The "velocity" type of microphone is so called because its action depends on the velocity of air particles rather than sound wave pressure. It is also known as a "pressure-gradient" unit, and more familiarly as a "ribbon."

The design of velocity or "pressure-gradient" units is represented in the development of the *RCA* 44-BX. With a uniform frequency response from 40 to over 10,000 cycles and an output level of —55 db., at a reference level of .001 watt, the 44-BX approaches the criterion in the combination of efficiency, sensitivity, shock resistance and streamlined ruggedness.

Construction of the 44-BX lies along conventional lines and is shown in Fig. 14-11. A thin corrugated aluminum ribbon, so designed and constructed that its natural resonant point falls below the lower limits of the audio frequency range, is suspended between the poles of two paralleled sections of a cobalt permanent magnet. As the length of

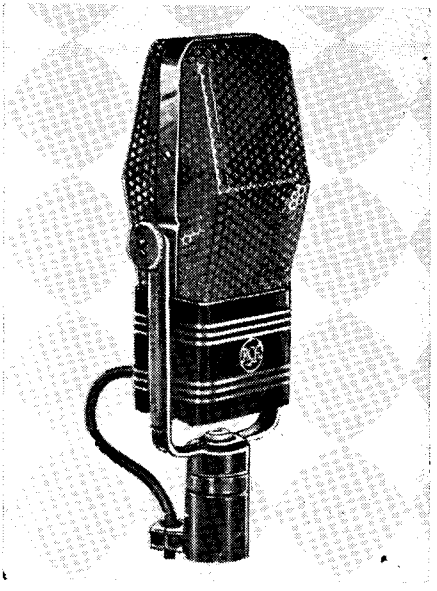

Fig. 14-11. The velocity microphone which is also known as a "ribbon type."

the ribbon is perpendicular with respect to the plane of the magnetic lines of force and its width coincident with that plane, it follows that any movement of the ribbon in response to the pressure-gradient of impinging sound waves will cause the magnetic lines of force to be cut in a transverse manner. By virtue of its extreme lightness and sub-audible resonant period, the ribbon allows uniform response over the entire audio frequency range without undue frequency discrimination or tendency toward cavity resonance effects. (See Fig. 14-12.) As a result, a properly designed ribbon displays excellent frequency response characteristics, with a relatively high voltage output.

Maximum sensitivity is evidenced toward sound waves approaching the microphone at an angle of 90 degrees to the plane of the ribbon (Fig. 14-13), with a corresponding loss of sensitivity to waves approaching at an angle of lesser degree. Since sound waves traveling in a plane identical to, or parallel to, the plane of the ribbon exert little or no pressure upon it, the resultant response pattern of the microphone becomes sharply bidirectional. Specific applications in which this characteristic may be used to best advantage will be discovered by experimenting with individual setups.

The *RCA* Type 44-BX Velocity Microphone is a Bi-directional microphone in which the moving element is a thin, rather narrow, corrugated metallic ribbon supported at the ends and placed between the pole pieces of a magnetic circuit. Because of its light weight, the motion of the ribbon corresponds very closely to the velocity of the air particles and the voltage generated in it is, therefore, a reproduction of the sound waves which traverse it. An impedance matching transformer and compensating reactor are located in the base of the microphone and the upper perforated portion provides a windscreen of distinctive shape.

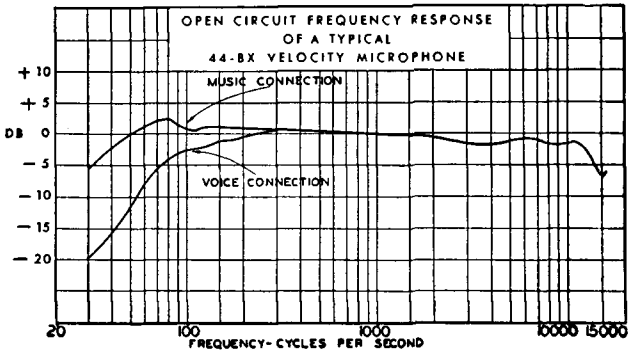

Fig. 14-12. Open circuit frequency response of RCA 44-BX velocity microphone.

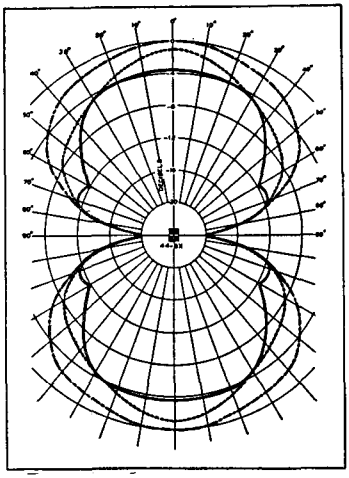

Directional characteristics of a typical 44-BX Velocity Microphone

——— 10,000 cps
- - - - - 6,000 cps
—·—·— 1,000 cps

Fig. 14-13. Directional characteristics of a typical 44-BX velocity microphone.

The 44-BX is attractively finished in satin chrome and a neutral umber gray to harmonize with modern studio interiors. The yoke mounting permits a wide range of tilting angles and the shock mounting reduces undesirable pickup from the floor vibrations.

The 44-BX is intended primarily for AM, FM and TV studio use where a microphone of the highest quality of reproduction is desired. It has the following general uses.

A. Broadcast Studio

(1) General Program and Announce.

(2) Plays where the players may be grouped around the microphone.

(3) Conference Pickup where the participants are seated on opposite sides of a table.

(4) Programs where studio acoustics are more live than optimum.

(5) Programs where the microphones may be suspended overhead and angled to reduce audience noise.

(6) Programs where the direction pattern permits orientation to eliminate undesirable reflections from walls.

B. Broadcast Remote

(1) General Program and Announce.

(2) Plays and other stage presentations where the microphone may be suspended overhead and angled to reduce audience noise.

(3) Programs where the directional properties reduce the effect of an overly reverberant location.

The 44-BX microphone is not recommended for outdoor use because of the relative sensitivity of the microphone to wind.

Specifications

Directional Characteristics: Bi-directional.

Output Impedances: 30/150/250 ohms.

Effective Output Level: —55 dbm.*

Hum Pickup Level: 112 dbm.**

Frequency Response: 50-15,000 cycles.

Finish: Umber gray and satin chrome.

Mounting: ½″ pipe thread.

Dimensions, overall: Height (including cushion mounting) 12″; Width, 4¾″; Depth, 3⅜″.

Weight (unpacked, including mountings): 8½ lbs.

Cable (MI-43A) 3 conductor shielded: 30 feet (no plug).

Stock Identification: MI-4027-G.

The Unidirectional Velocity Microphone

In the *RCA* 77-A, unidirectional microphone (Fig. 14-14) the principle of operation, by virtue of the unique manner in which the ribbon is constructed, is much the same as that of the cardioid microphone. The corrugated ribbon is suspended vertically between the two halves of a permanent magnet, the field of which is cut in the usual transverse manner. The ribbon, however, is divided into two equal sections which operate independently of each other, the upper half being responsive to the pressure of sound waves and the lower half

*Referred to 0.001 watt and a sound pressure of 10 dynes/cm^2 (94 db. level).

**Referred to 0.001 watt and a 60 cycle hum field of 0.001 gauss.

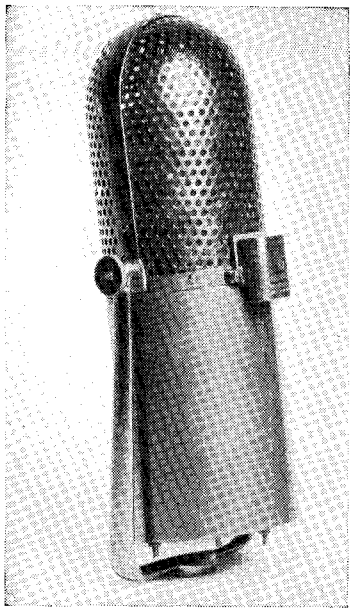

Fig. 14-14. The RCA Model 77-A

actuated by air particle velocity and acting as a conventional ribbon unit.

The upper section is made to operate as a pressure unit by allowing the ribbon to vibrate freely as usual, but with the back section enclosed in a metal housing terminated in an infinite impedance in order to prevent a rising response characteristic at the higher frequencies. A practical means of attaining such an impedance is by the use of a number of metal plates approximately ¾ inch thick and 4 inches in diameter, placed one upon the other to form a cylinder. The inside portion of each plate is spiral-shaped, with a small opening at the beginning and end of each spiral which corresponds with a like aperture in each succeeding layer of plates to form a continuous labyrinth, each layer being loosely packed with absorbent material to aid in reflection damping.

THE POLYDIRECTIONAL MICROPHONE

The *RCA* 77-D high-fidelity microphone provides a choice of directional pattern in its use in AM, FM and TV broadcast studios. As a bi-directional microphone, the 77-D can be used in place of the 44-BX with some loss in high frequency response. As a *uni-directional microphone*, the 77-D may be used to advantage in the following applications:

(1) General Programs and Announce in Studios.

(2) Television Booms—The required amount of microphone movement is reduced. The pickup of unwanted sound back of the microphone is reduced. The working distance to the microphone is increased.

(3) Programs where it is desirable to cover a large area with a single microphone.

(4) Programs where studio acoustics are more live than optimum.

(5) Programs where it is desirable to eliminate audience noise originating behind the microphone.

(6) Programs where the directional pattern permits orientation to eliminate undesirable reflections.

(7) Programs where the announcer must work close to the microphone.

(8) General Programs and Announce in Remote Locations.

(9) Plays, stage presentations, banquets, news events where it is desirable to reduce the pickup of sound behind the microphone.

(10) Programs where the directional properties will help to reduce the effect of an overly reverberant location.

As a NON-DIRECTIONAL MICROPHONE the following applications are suggested:

(1) Announce in studios and remotes where the announcer must work very close to the microphone.

(2) Out-of-door programs and announce where the microphone need only be protected against rain.

The 77-D is extremely versatile and experience has shown that its characteristics may be adjusted to cover almost any pickup condition. Its physical appearance is similar to Fig. 14-14.

The moving element of the 77-D is a thin corrugated metallic ribbon clamped at the ends and suspended in the air gap

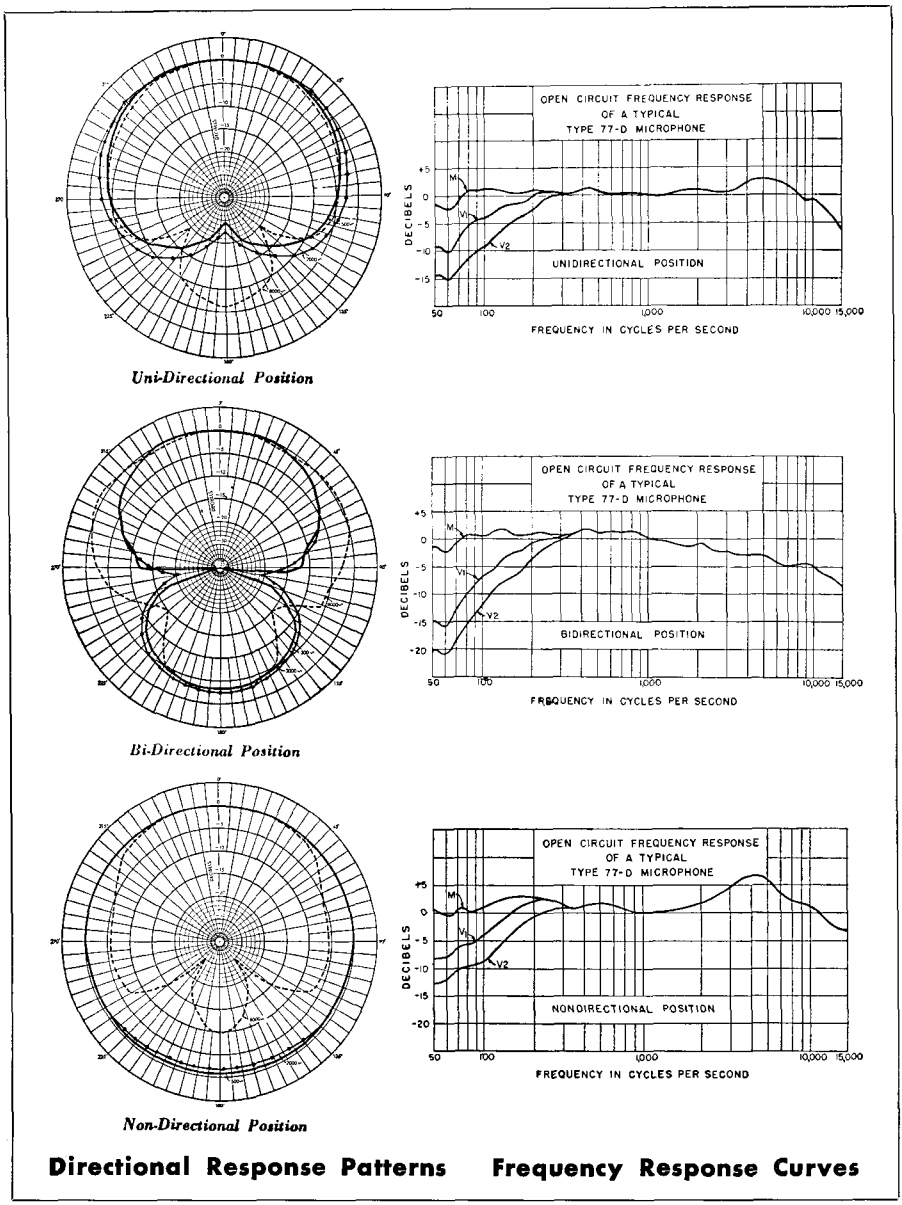

Fig. 14-15. Directional response patterns and frequency response curves of RCA 77-D polydirectional microphone.

of a magnetic circuit consisting of a permanent magnet and pole pieces. One side of the ribbon is open and the other is connected by means of a tube to a folded acoustically damped pipe contained in the center section of the microphone. Directly behind the ribbon there is an aperture in the connecting tube, the size of which may be varied by means of a rotating shutter. The position of the shutter determines the directional properties of the microphone. When the aperture is completely open, the microphone has a bi-directional pattern; when the aper-

ture is completely closed, the microphone is non-directional; and with a critical size of opening the microphone becomes uni-directional. Other positions of the shutter results in patterns intermediate between the above three.

The position of the shutter may be selected by turning a slotted shaft which is brought out flush with the rear of the windscreen. The directional pattern corresponding to the shutter position is indicated on a plate mounted on the screen and marked "U," "N" and "B." If desired the microphone may be locked in the uni-directional position by means of a cover plate marked "U" which fastens over the indexed plate. The bottom portion of the microphone contains an impedance matching transformer and switch for selecting response characteristics for Voice or Music. The switch shaft is slotted and accessible through a hole in the bottom of the lower shell. The transformer is exceptionally well shielded against stray magnetic fields.

Specifications

Directional Characteristics (adjustable, see Fig. 14-15) (Bi-directional, Uni-directional, Non-directional).

Output Impedance: 30/150/250 ohms.

Effective Output Level (Uni-directional): —57 dbm.*

Hum Pickup Level: —125 dbm.**

Frequency Response: 50-15,000 cycles.

Finish: Satin chrome and umber gray.

Mounting: ½″ pipe thread.

Dimensions, Overall: Height 11½″; Width 3¾″; Depth 2½″.

Weight (unpacked, including mountings): 3 lbs.

Cable (MI-43-A, 3 conductor shielded): 30′ (no plug).

Stock Identification: MI-4045-B.

ACCESSORIES

Protective Cloth Bag: MI-4087.

*Referred to 0.001 watt and a sound pressure of 10 dynes/1cm². This is equivalent to the proposed RTMA rating at a sound pressure level of 94 db.

**Level referred to a hum field of 0.001 gauss.

The Cardioid Microphone

An explanation of cardioid directivity is best given through a detailed examination of the characteristics of a typical cardioid microphone. Such a microphone is the *Western Electric* 639-A (Fig. 14-16) whose directive pattern resembles the heart-shaped or "cardioid" plot of the mathematical term $(1 + \cos \theta)$, hence its name. This pattern makes possible a wide-angle pickup of 120 degrees, and is the result of the utilization of the combined outputs of a nondirectional dynamic unit similar to that of the 630-A and mounted vertically as a semidirectional unit, and a specially constructed bidirectional ribbon unit, both being housed in the same case. See Fig. 14-16.

It is well known that sound will flow around corners or curved surfaces and since the case holding the dynamic unit is so designed, sound waves approaching from the back of the microphone follow the rounded contour of the case to the front of the diaphragm, thereby causing it to move in the same direction in response to sound waves arriving from the back and sides as to those arriving from the front. Thus the diaphragm always moves in one direction only, and the output of the microphone maintains a constant phase relation. For this reason its output may be represented mathematically by a whole number, such as 1, or unity. The bidirectional velocity unit, however, responds to sound waves approaching from two opposite directions, and as a result the ribbon reverses in phase each time the direction of sound is reversed. This phase reversal is proportional to the cosine of the angle of the approaching sound, and a combination of the two outputs $(1 + \cos \theta)$ approximates the true cardioid.

The unique structure of the ribbon allows a practically uniform response over the low and high frequencies as well as the middle frequency range. Normally, a conventional ribbon unit, when used in conjunction with a dynamic unit, tends to discriminate to some degree all frequencies above and

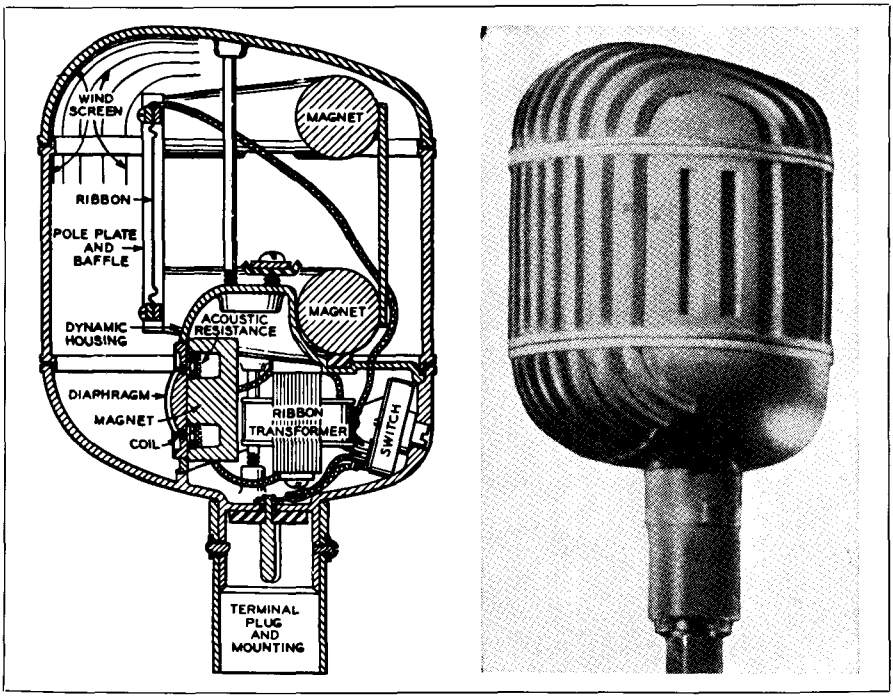

Fig. 14-16. The Western Electric 639-A cardioid directional microphone.

below a certain medium range, resulting in an unbalanced condition of pickup with accompanying frequency distortion.

Physically, the ribbon designed for the 639-A is less than half the length of an average ribbon, is decidedly narrower, and is corrugated at either end, with its center section straight in relation to the front of the microphone. Since this portion is concave to the back of the microphone, it presents slightly more acoustical resistance to sound waves traveling in this direction than to those arriving from the front, thus aiding in equalizing the pickup from both directions, and presenting a closer approach to a true bidirectional pattern. This form of ribbon construction also affords less resistance to wind, prevents possible twisting of the ribbon, and contributes to its over-all ruggedness.

General construction of the 639-A is shown in the cross-sectional diagram of Fig. 14-16. The three-position switch in back of the housing is slotted for screw-driver operation, and allows selection of three directional patterns—*C* for cardioid, in which both units are combined; *D* for dynamic, in which the pressure unit alone is connected; and *R* for ribbon. In the 639-B six positions are available, the extra three being used to give varying degrees of directivity to the cardioid pattern. See Fig. 14-17.

Output impedance of the 639-A is 30 ohms, and its output level is —85 db. with reference to 1 volt/bar or .006 watt.

The Cardioid Crystal Microphone

The *Astatic* Model DR-10 is a unidirectional cardioid crystal microphone.

The unidirectional characteristics are especially helpful on difficult installations, where acoustic feedback, background noise and reverberations are troublesome. It is recommended for broadcast studios, paging systems, recording studios, public address, amateur radio and other applications where quality performance is required.

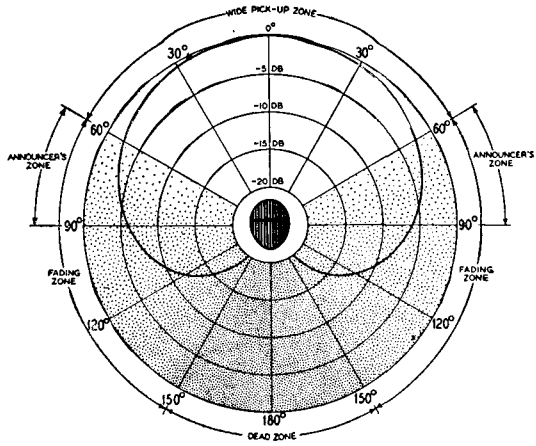

Fig. 14-17. Reference chart for interpreting the performance of the 639A microphone.

Fig. 14-18. Astatic model DR-10 Cardioid crystal microphone. (Courtesy Astatic)

The Model DR-10 (Fig. 14-18) provides a true cardioid pickup pattern, essentially uniform over the entire range. This is accomplished by a new principle, using sintered bronze in an internal acoustical network to obtain approximately 15 db. differential in front to back response. For practical purposes, the "Synabar" is dead to sound from the rear. Polar pattern is shown in Fig. 14-19.

A response selector switch is located in the back of the microphone for easy adjustment of response to suit individual needs. This switch is operated with a pencil point or small screwdriver. The lower position marked "Normal," flat, wide range frequency response is obtained when using the standard 15′ to 20′ of cable, and feeding into a 5 megohm load. Moving the switch to the upper position marked "Crisp," provides rising characteristic in the 1000 to 5000 cycle range for clearness and crispness of speech. This may be especially useful for overriding a high general noise level in paging and similar applications. Amplifier gain controls should be adjusted to properly handle the higher level when switching from "Normal" to "Crisp." See Fig. 14-20 for frequency response curve.

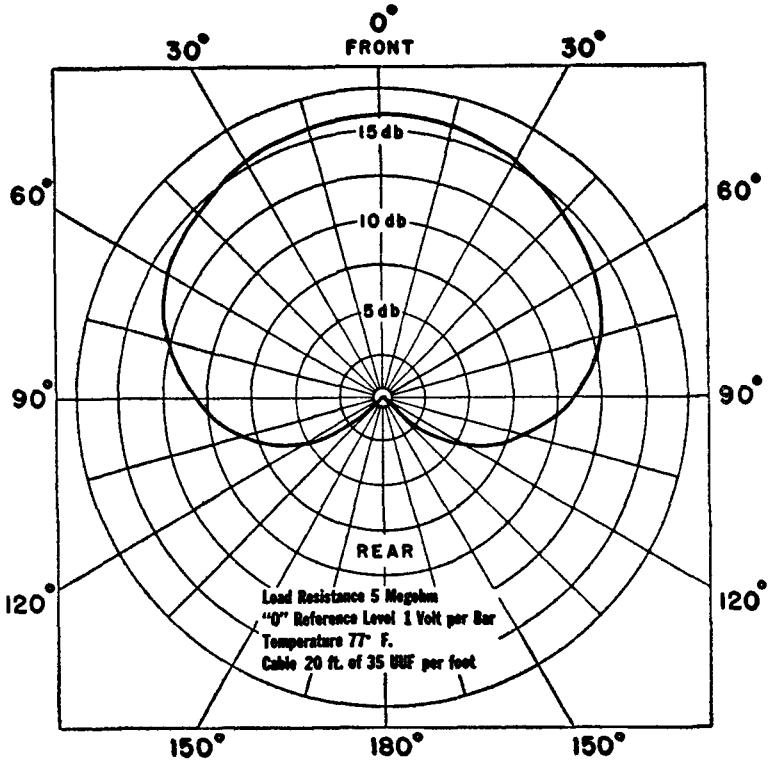

Fig. 14-19. Polar pattern of the model DR-10 Cardioid crystal microphone.

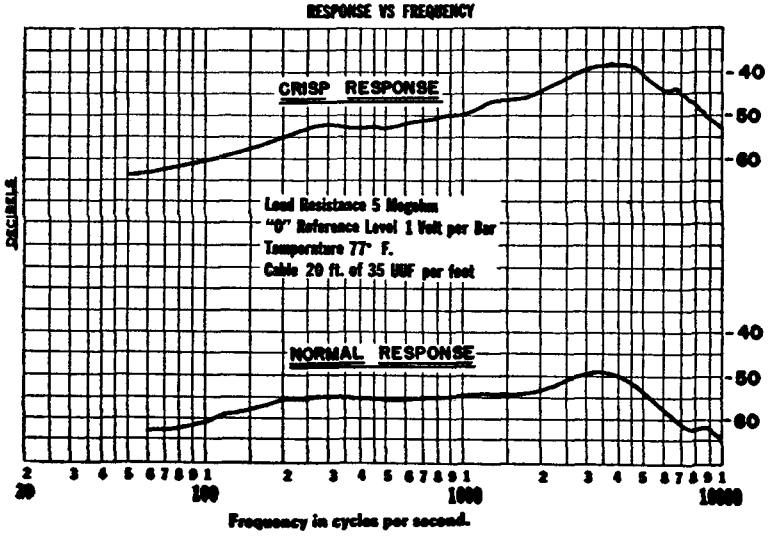

Fig. 14-20. Frequency response curves of the Astatic DR-10.

Installation

The Model DR-10 is a high impedance crystal microphone; and should be connected direct to grid and ground of the amplifier input tube. When so connected, it is important that a parallel resistance or grid leak of not less than 5 megohms be used. A lower value may be used when it is desired to reduce the low frequency response.

THE CONDENSER MICROPHONE

The *Western Electric* 640AA Condenser Microphone (Fig. 14-21) offers advantages both to the acoustic technicians and to the broadcast studio engineer.

As a laboratory instrument this microphone provides precision measurement of sound intensity over a wide range of temperature and humidity conditions. Accurate, scientific production tests of other sound instruments such as receivers, loudspeakers and microphones may also be obtained through its use.

In the broadcasting field, when associated with its companion RA-1095 Amplifier, the 640AA Microphone provides a means for faithful program pick-up especially in auditoriums or in large studios which have proper acoustical characteristics for use of the remote single microphone pick-up technique. This application is particularly effective where orchestras or similar large groups are involved. The combination can readily be used with standard studio equipment since, for a sound field pressure of 1 dyne/cm^2 (sound level of +74 db.), a net supplementary gain of approximately 60 db. is adequate to raise its output to a line level of +8 vu.

In most applications the small size of the microphone is a pronounced advantage in that "point pick-up" performance is approached and field disturbances resulting from the presence of the microphone is minimized. Phase distortion is negligible because of the high resonant frequency of the stretched diaphragm.

The microphone is provided with a removable grid over the face of the diaphragm to afford mechanical protection under normal program pick-up conditions. For measuring applications it is usually desirable to remove this grid (Fig. 14-22) since all calibrations are made with the grid removed. In the event it should be necessary to leave the grid on in this type of application, suitable correction factors can be determined at the point of use by making the required

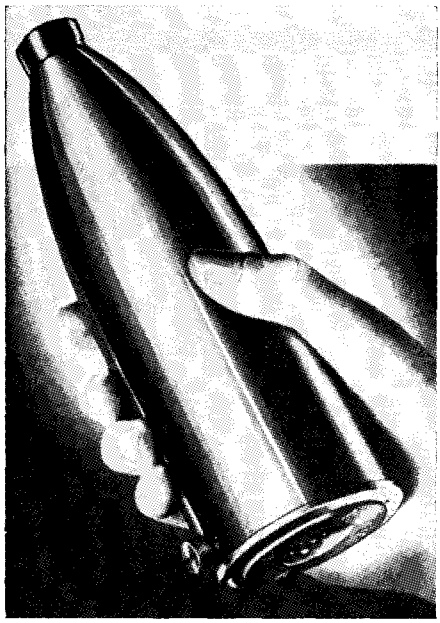

Fig. 14-21. Western Electric 640AA condenser microphone with RA-1095 amplifier. (Courtesy Western Electric)

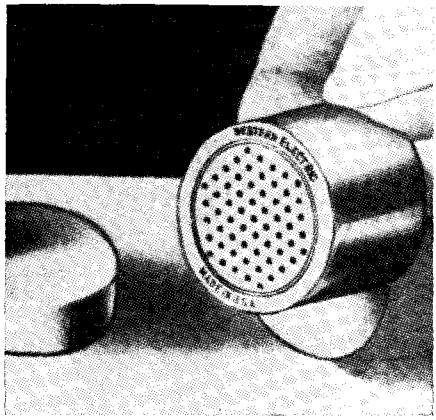

Fig. 14-22. The WE 640AA microphone cartridge and grid. (Courtesy Western Electric)

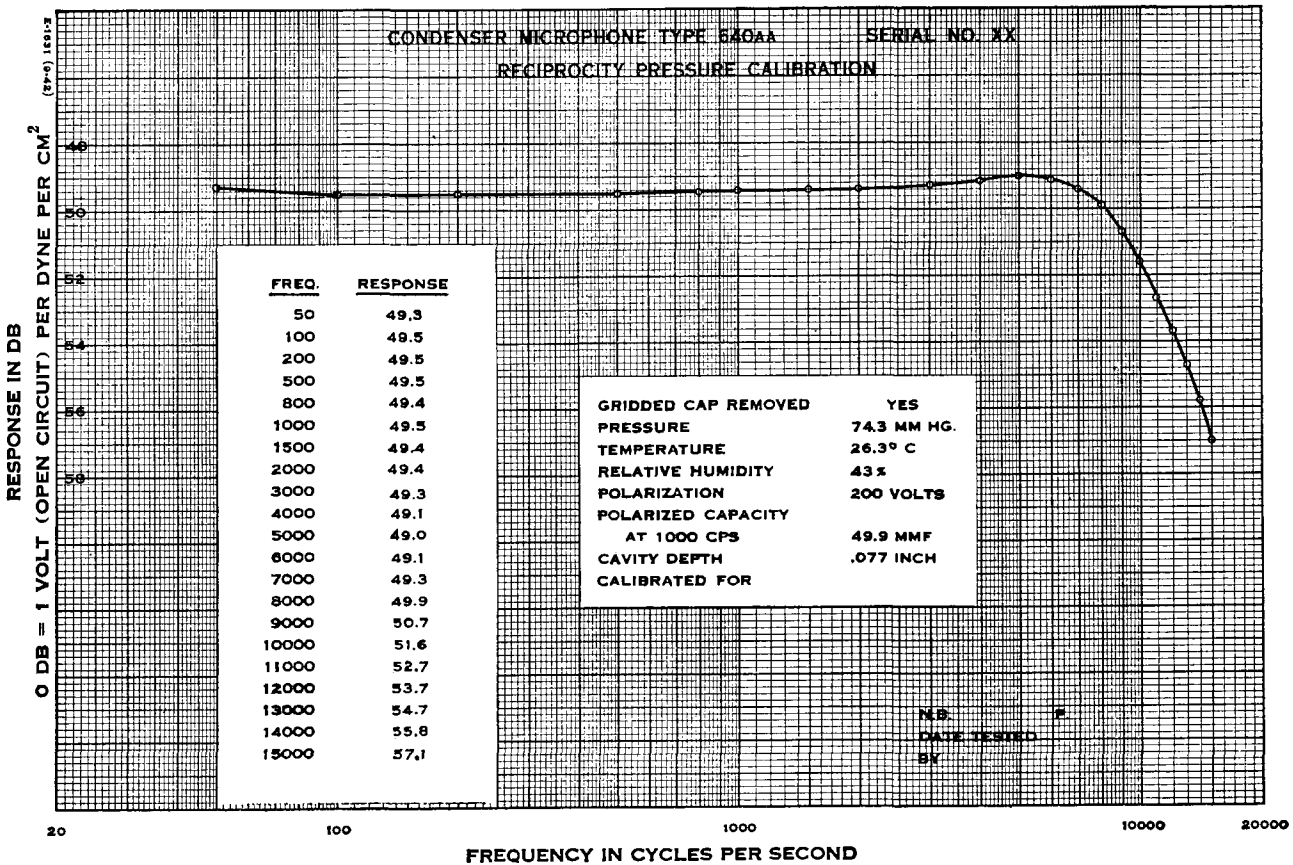

FREQ.	RESPONSE
50	49.3
100	49.5
200	49.5
500	49.5
800	49.4
1000	49.5
1500	49.4
2000	49.4
3000	49.3
4000	49.1
5000	49.0
6000	49.1
7000	49.3
8000	49.9
9000	50.7
10000	51.6
11000	52.7
12000	53.7
13000	54.7
14000	55.8
15000	57.1

Fig. 14-23. Pressure response characteristics of condenser microphone type 640AA.

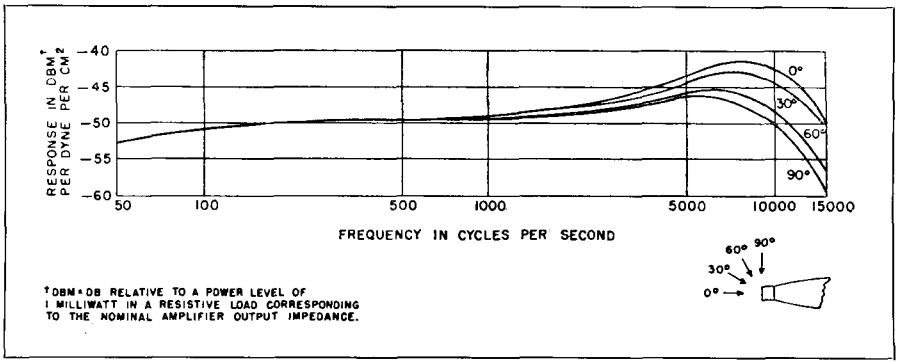

Fig. 14-24. Typical free-field response of 640AA condenser microphone in combination with RA 1095 amplifier.

frequency runs with and without the grid.

The 640AA Condenser Microphone is available calibrated by the "Reciprocity Pressure Response Calibration Method" on special order.

A chart (see Fig. 14-23) is supplied with calibrated microphones, which, in addition to the pressure response curve and the points of calibration on which it is based, shows the conditions under which the calibration was obtained and gives the polarizing capacity at 1000 cps. Also, a free-field correction curve (Fig. 14-24) is supplied, which, when applied to the pressure calibration gives the free-field calibration for 0° sound incidence. In order for the calibration to apply exactly, the instrument should be used under conditions identical to those under which it was calibrated. Suitable correction factors can, of course, be determined at the point of use if these conditions must be altered.

The pressure response characteristic shown in Fig. 14-23, which is applicable only to measurements in small chambers is approximately constant to 6000 cycles per second and then falls off uniformly to the extent of 10 db. at 15,000 cps.

The pressure response level in the 50 to 6000 cycle range with 200 volts polarizing potential is approximately 49.5 db. below 1 volt (open circuit per dyne/cm²).

Frequency Response: The free-field response characteristics of the 640AA Microphone in combination with the RA-1095 Amplifier are shown in Fig. 14-24. The difference in shape above 1000 cycles per second between the zero degree free-field curve, and the pressure calibration shown in Fig. 14-23, is due almost entirely to diffraction effects which result when the microphone (640AA mounted on an RA-1095 Amplifier) is placed in a free sound field, and not to the amplifier which has parctically no effect on the shape of the response characteristics. The range covered, it will be noted, is admirably suited to the highest quality AM or FM program transmission requirements. With the line of sound approach, or perpendicular to the plane of the diaphragm, (0 degrees), the response is approximately constant for sounds in the frequency range between 50 and 1000 cycles per second. Above 1000 cps the response rises gradually to a maximum of about 8 db. at 8000 cps, then drops uniformly to a level which at 15,000 cps is roughly equal to that at 1000 cps.

As illustrated in Fig. 14-24, the response of the 640AA Microphone varies somewhat in the higher frequencies depending on the direction from which the sound wave approaches the diaphragm. For sound 30 degrees off normal incidence, the 8000 cycle maximum is reduced about 1 db. For sound 60 degrees off normal this level is reduced about 3½ db. and for sound 90 degrees off normal about 7 db. The steepness of slope for frequencies around 10,000 cycles in-

creases slightly with the degree of variation from normal incidence.

Specifications

Frequency Characteristic: Pressure Response: see Fig. 14-23. Free-field Response: see Fig. 14-24.

Output Level: Approximately 49.5 db. below 1 volt (open circuit) per dyne/cm^2 with 200 volts dc polarizing potential.

Output Impedance: Essentially that due to its capacitance which is approximately 50 mmf. to 60 mmf.

Operates Into: Grid circuit of closely associated vacuum tube amplifier (such as *Western Electric* RA-1095 Amplifier).

Polarizing Voltage: 220 volts dc maximum from well regulated quiet supply. Caution: Polarizing voltage exceeding 220 volts should not be applied as higher voltages may damage the instrument.

Dimensions: Cylindrical shape approximately 1″ diameter and 1″ long.

Weight: Approximately 1½ ounces.

Mounting: For optimum signal-to-noise the microphone should be closely associated with the first stage of amplification and preferably mounted in the structure containing this amplifier.

External Connection: The 640AA Microphone is especially designed to mount on the RA-1095 Amplifier. It has a spring mounted plunger and male base threads for providing connection to the amplifier. When associated with another type of amplifier, the microphone should be connected to the grid of the vacuum tube by means of a short, well-shielded, low capacitance lead to the center contact a rear of instrument. The cylindrical shell of the microphone should be connected to the grounded side of the grid circuit thereby serving as a shield for the inner components.

RA-1095 AMPLIFIER

The *Western Electric* RA-1095 Amplifier (Fig. 14-25) is a small, single stage amplifying unit developed especially for use with the 640 type Condenser Microphone. Shaped like a long range military projectile, this amplifier is approximately 7¾″ long by 2½″ in diameter and weighs only 1¾ lbs.

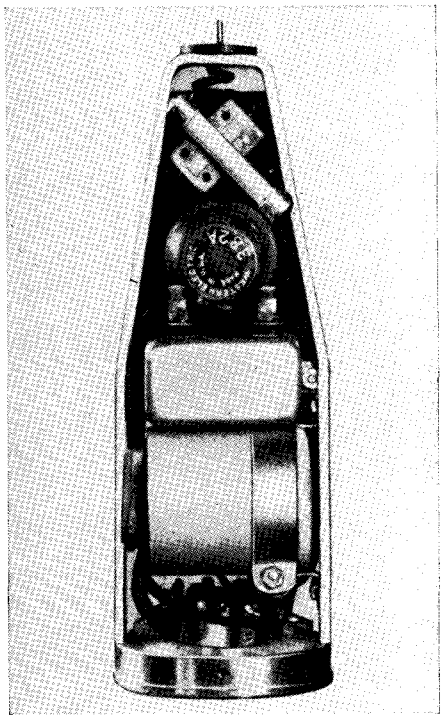

Fig. 14-25. The Western Electric RA-1095 amplifier. (Courtesy Western Electric)

The output level of this combination for a given sound field is about 28 db. higher than that of a standard high quality studio microphone, and the signal-to-noise ratio compares favorably. The free-field frequency response characteristics for the combination are shown in Fig. 14-24.

The amplifier is furnished complete with a selected 382A vacuum tube of the familiar "door knob" type which has no base; the terminals are pins anchored in the glass envelope. The tube is supported in a hole in the main chassis frame with its leads soldered so that the glass shoulders rest firmly against the mounting detail.

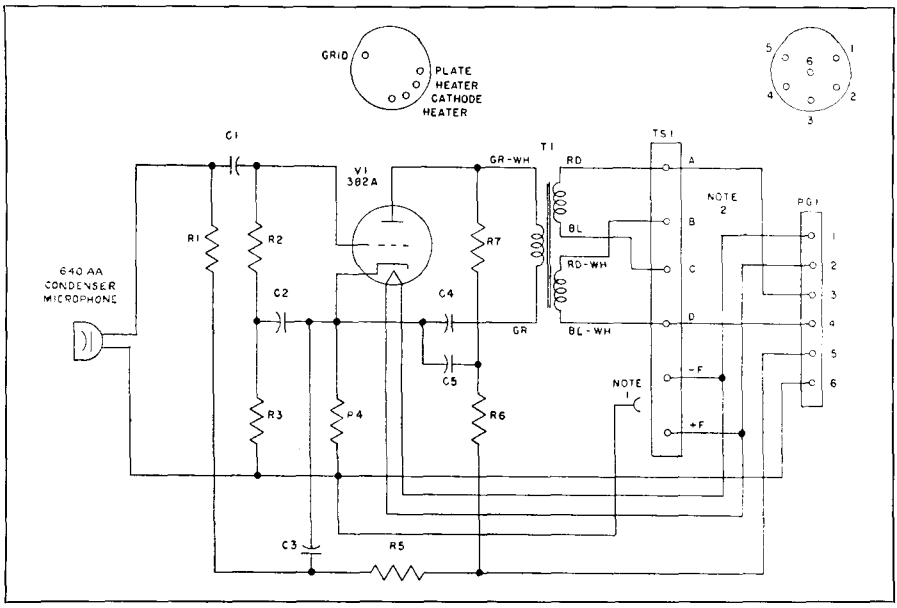

Fig. 14-26. Schematic diagram of the single stage RA-1095 amplifier for use with the 640AA condenser microphone.

To operate the RA-1095 Amplifier, 150 milliamperes at 6.3 volts dc are required for the heater or filament circuit (Fig. 14-26) and approximately 3 milliamperes at 220 volts dc are required for the plate and microphone polarization supply. For maximum noise-free operation both sources of power should be extremely quiet.

Plate and polarizing supply voltages of less than 20 volts may be used but at a sacrifice in the microphone response level. The loss in the microphone sensitivity will be directly proportional to the decrease in polarizing potential from 220 volts.

Specifications

Frequency Characteristic: See Curve Fig. 14-24 (microphone and amplifier in combination).

Output Level: Approximately —29.5 dbm. with the 640AA Microphone in a sound field of 10 dynes/cm² or —49.5 dbm. in a 1 dyne/cm² sound field.

Signal-to-Noise Ratio: Approximately 40 db. at an output level of —49.5 dbm. (0-15,000 cycle band).

Distortion: Less than one percent at —3 dbm. output level.

Operates from: 640AA Condenser Microphone.

Output Impedance: Designed to be used with equipment having rated source impedance of 25-50 or 150-250 ohms.

Power Supply: (Quiet sources required for both filament and plate power).

Filament: 6.3 volts, 150 milliamperes, direct current.

Plate: 220 volts maximum, 3 milliamperes, direct current.

Dimensions: Approx. 7¾″ long, 2½″ diameter.

Weight: Approx. 1¾ pounds.

External Connections: Through 6 prong socket in base of amplifier.

Mounting: Suspend from socket cord or use shock mounting hanger to fit user's microphone boom or other suspension mounting.

THE CONTROLLED RELUCTANCE MICROPHONE

The new *Shure* Controlled Reluctance Microphone (Fig. 14-27) is the fulfillment of continued engineering develop-

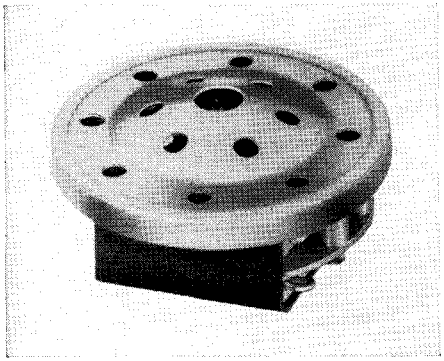

Fig. 14-27. Shure Bros. controlled reluctance cartridge. (Courtesy Shure Bros.)

ment of a magnetic unit originally used in battle announce microphones and headsets made for our Armed Forces. The new development features: High Sensitivity, Excellent Response, Light Weight, Impedance Flexibility without costly transformers, Stability, and Dual Operation as microphone and soft speaker. This newly developed assembly is an acoustically controlled balanced-armature transducer ideal for both microphone and soft speaker applications. Stability is assured by a unique control of the reluctance of the magnetic system. High sensitivity and good fidelity are achieved in part by the extremely light and compliant structure of the electromagnetic microphone. See response curve Fig. 14-28. The Controlled Reluctance Microphone is available as a cartridge only, for embodiment in the user's housing, and also in a variety of *Shure* microphone cases.

Specifications

1000 cps Response: 52 db. below one volt per microbar.

Frequency Response: 100 to 9000 cycles per second.

Ruggedness: Practically immune to high temperatures and humidity.

Impedance: Available in production lots in low or high impedance.

Standard Impedance: 16,000 ohms at 1000 cps.

MINIATURE BROADCAST-TELEVISION MICROPHONES

The physical microphone placement problem presented by television programming has given impetus to the development of ultra-compact designs of several basic types of microphones. Special streamline housings and a reduction in physical dimensions are the main features of transducers, designed especially for new program techniques. These microphones have proven themselves in service and have become very popular. They have also been used successfully in applications of public address, recording and especially for "pass-around" programming. Representative designs

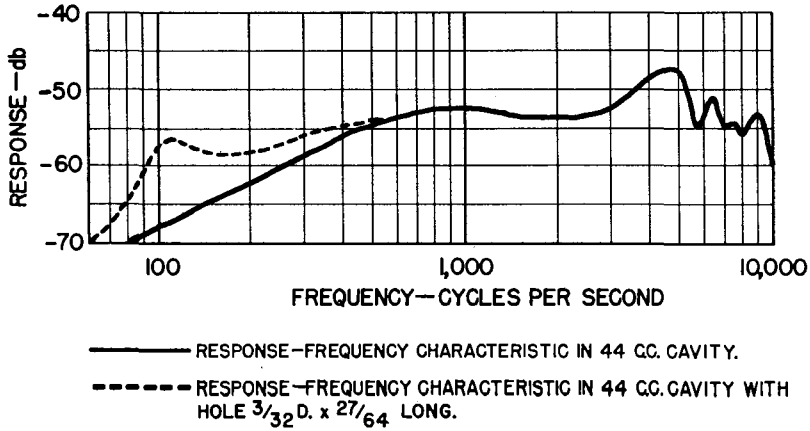

Fig. 14-28. Frequency response characteristics of the controlled reluctance microphone.

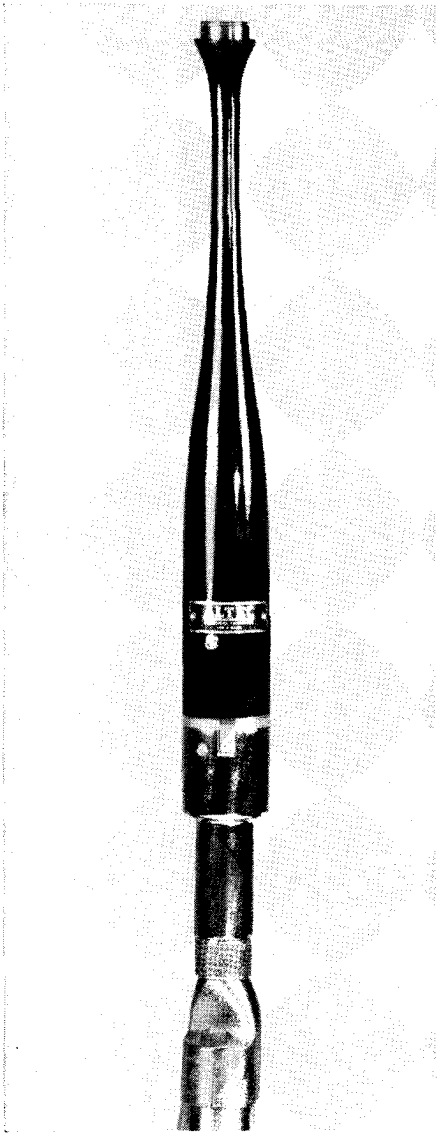

Fig. 14-29. Altec model 21B omnidirectional capacitor microphone. (Courtesy Altec-Lansing)

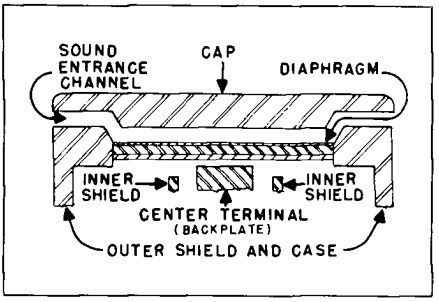

Fig. 14-30. Cross section showing the backplate structure of the 21B microphone.

and circuitry are discussed in the following paragraphs.

Altec 21B Capacitor Miniature Microphone

The Model 21B *Altec Lansing* Omnidirectional Capacitor Microphone, Fig. 14-29, comprises the microphone assembly with base, which is essentially the housing for the associated vacuum tube and its circuits. In this design a glass-bonded mica, having a leakage resistance of more than 10^7 megohm is used as the insulator. The backplate structure, Fig. 14-30, consists of three stainless steel inserts: the backplate, the inner electrostatic shield and an outer threaded ring. The assembly is completely bonded under extreme pressure into one unit. The diaphragm is fabricated from a lamination of silicone and silica elements, held to thickness tolerances of 0.0002 in. The laminate structure upon completion is given a molecular coating of pure gold on one surface to form the necessary conductor. The diaphragm is pressure-held against a seating ring by a corrugated washer.

A sound-entrance channel, of 0.020 in. width, lies in a plane parallel to the diaphragm. This narrow slot aids in maintaining an omnidirectional pickup characteristic and provides complete mechanical protection for the diaphragm without creating any cavity resonances. The capacity of the microphone varies with sound pressures which actuate the diaphragm. This causes a corresponding change in voltage between the diaphragm and the backplate. The signal resulting is applied to the grid of the miniature 6AU6 at a termination of 10,000 megohms. The 6AU6 is used as an impedance matching tube in conjunction with a power supply as shown in Fig. 14-31. The backplate of the microphone gets its polarization through the eleva-

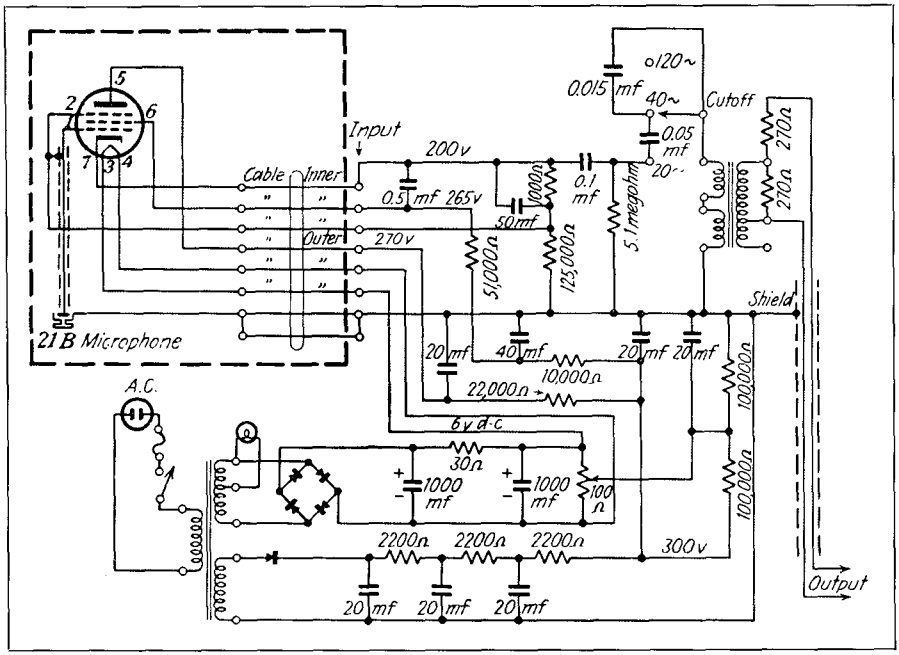

Fig. 14-31. Schematic of the impedance matching amplifier with power supply for the Altec 21B microphone.

tion of the cathode voltage ground potential.

Selenium rectifiers provide necessary plate and screen voltages and the heater current for the 6AU6 cathode-follower tube. A matching transformer with a primary of 70,000 ohms is used to match the output of the 6AU6 to conventional loads of broadcast type preamplifiers. The sensitivity of the microphone extends well into the very low frequencies. As a matter of fact, it is only down approximately 3 db. at 10 cycles. A switch mounted on the power supply reduces the low frequency response at the rate of 60 db. per octave. The steps are 6 db. at 20, 40 or 120 cycles. The sensitivity of the microphone is rated at —48 db. below 1 milliwatt for a sound field of 10 dynes/sq cm at the transformer output. The open circuit voltage of the microphone is —50 db. below a reference of 1 volt/dyne/sq cm, and the electrical capacitance is approximately 6 mmf.

One of the features of this small microphone is that the quality or frequency response remains unchanged at any distance from the sound source. The 21B microphone is ideally suited for one mike pickups and because of its compactness and shape is an outstanding type for television application.

STEVENS C-2S MICROPHONE SYSTEM

The *Stevens* Tru-Sonic Microphone (Fig. 14-32) eliminates conventional preamplifiers. The high efficiency necessitates no other amplification than the one-tube amplifier circuit incorporated in the Oscillator/Demodulator Unit to achieve an output of —15 dbm. when operated in the usual sound field of 10 dynes/cm^2. This level is equivalent to a ribbon microphone with a 40 db. preamplifier.

Tru-Sonic Microphone systems operate on a principle which eliminates many of the disadvantages found in other types. It is set apart by the *manner* in which minute capacity changes in the diaphragm are utilized to control electri-

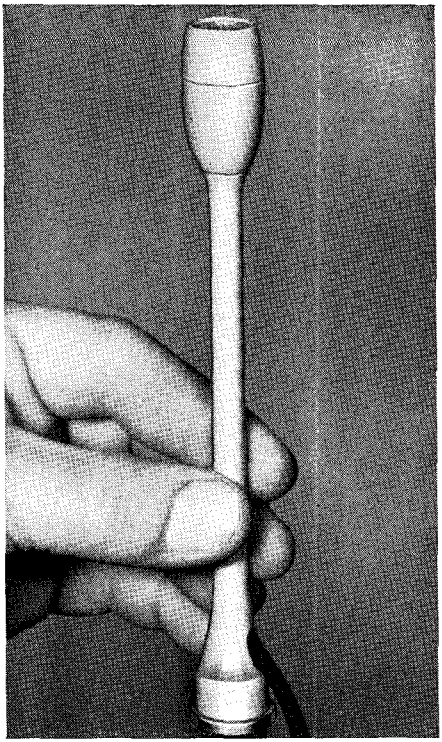

Fig. 14-32. The Stephens C-2S Tru-Sonic microphone. (Courtesy Stephens Manufacturing Corp.)

cal energy. Because no polarizing voltages are employed, diaphragm spacing can be many times closer than that used in conventional condenser type transducers. This allows maximum capacitive change with the very minimum of diaphragm movement, vastly increasing the pressure sensitivity. Pressure variations on the diaphragm produce minute changes in head tuning. These changes result in amplitude modulation of oscillator energy fed to an infinite impedance demodulator. This demodulator converts these signal changes to audio frequency voltages. The circuit employed for converting these capacity changes to audio voltage is simple, using a minimum of components, see Fig. 14-33. The microphone head contains a tiny coil which is tuned by the diaphragm capacity to the approximate frequency of a crystal-controlled oscillator located in the Oscillator/Demodulator Unit. See Fig. 14-34.

The linearity of response and absence of peaks allows a correspondingly higher level to be employed in PA installations before regenerative howl or feedback becomes apparent.

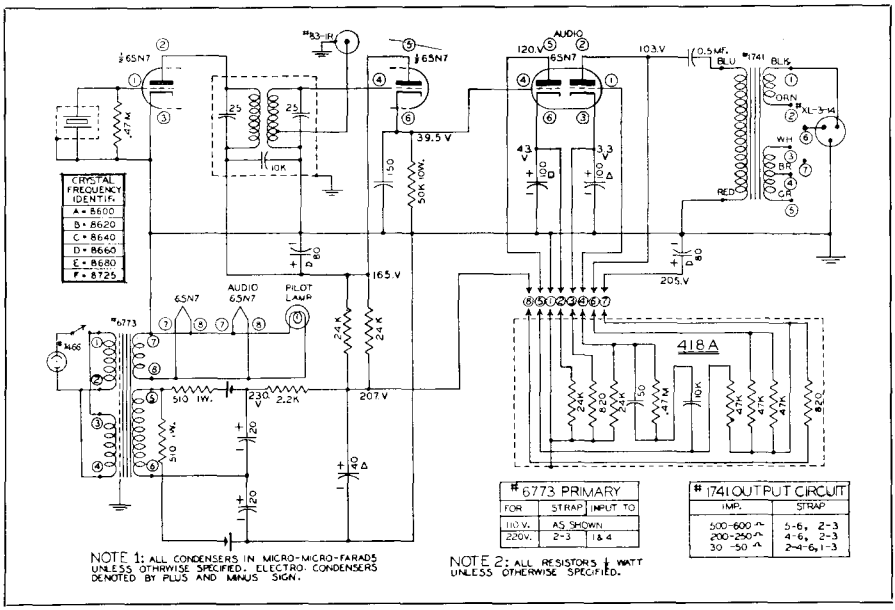

Fig. 14-33. Amplifier schematic of the OD-4C oscillator-demodulator for use with the Stephens C-2S microphone.

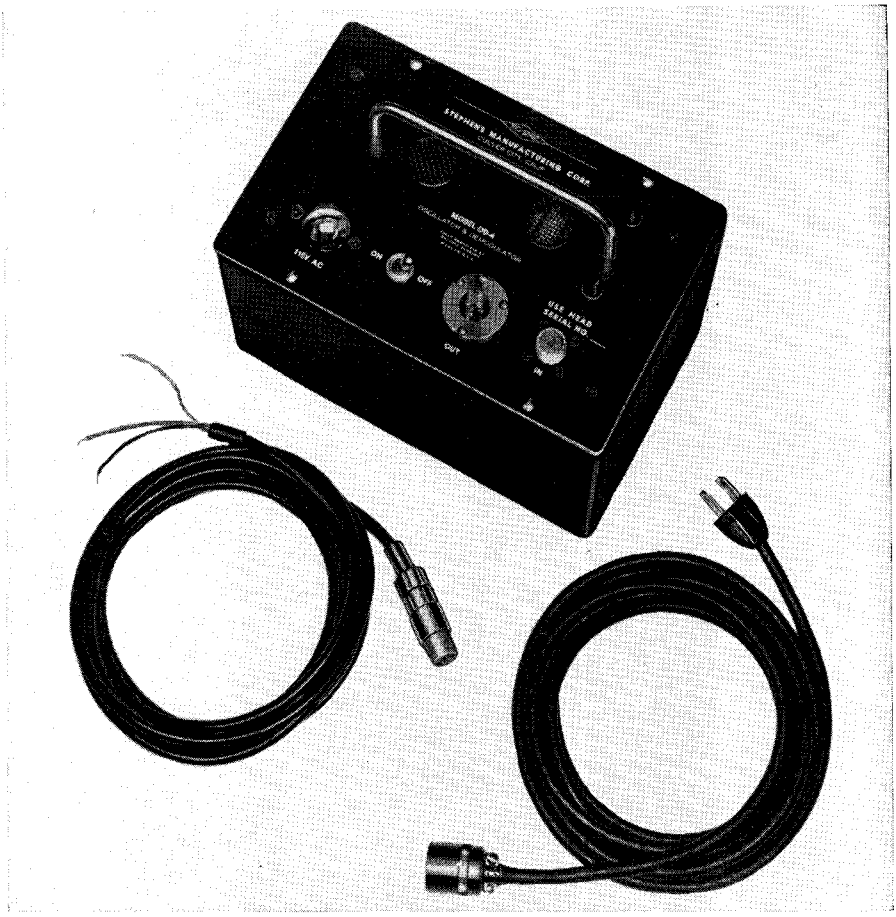

Fig. 14-34. Stephens oscillator-demodulator unit type Model OD-4. (Courtesy Stephens Manufacturing Corp.)

All cable connectors are of the positive looking type, minimizing noise possibilities from this source. Tru-Sonic Microphone systems require no maintenance other than that accorded any other high quality electronic equipment. Unlike many other microphones of high sensitivity, a severe shock will not place the unit out of service. This is due to its rugged construction and the stability of its design.

Specifications

Model OD-4 Oscillator/Demodulator

Power Requirements: 115-230 volts, 50-60 cps, 15 watts.

Tube Complement: Two 6SN7GT.

Output Impedance: 50, 250 or 600 ohms (supplied connected for 600 ohms).

Output Level: —15 dbm. maximum (T-pad is factory-installed for any desired level or impedance).

Signal-to-noise ratio: 60 db. or better.

Output Connector: Cannon Type XL 14 No. 3 pin ground. Furnished with 8′ shielded output cable with matching connector and 10′ power cable.

Dimensions: 5⅞″ deep x 9″ wide x 7½″ high, including handle.

Weight: 6¾ lbs.

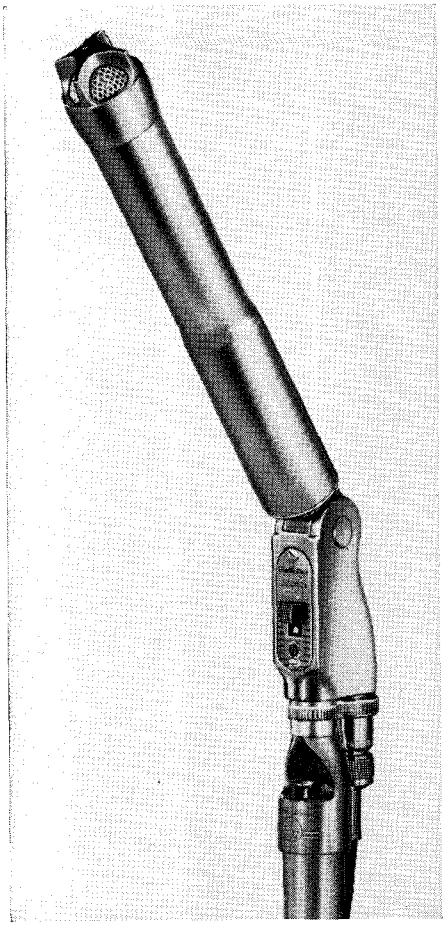

Fig. 14-35. The Electro-Voice Model 636 dynamic microphone. (Courtesy Electro-Voice)

ELECTRO-VOICE OMNIDIRECTIONAL DYNAMIC MICROPHONE

The Electro-Voice Model 636, Fig. 14-35, is a dynamic type, omnidirectional mirophone designed specifically to bring the advantages of slim, trim styling to the sound pick-up field. Because the microphone measures only 1 1/16″ in diameter it does not obscure the performers, thus greatly reducing the problems of PA staging. The moving coil generating element provides relatively high output level and complete freedom from the necessity for closely associated auxiliary equipment. The output level of the Model 636 is said to be equal to that of microphones four times as large. The baton design of the 636 makes it handy for "pass around" use in audience participation shows. The microphone has wide angle pick-up. On-Off switch in microphone stud is positive acting and gives instant control of microphone output.

The microphone case is sturdy, extruded brass, finished in satin chrome. The 636 is supplied with a built-in blast filter of acoustically treated wire mesh grille which stops wind and breath blasts.

The case may be swiveled 90° on the microphone stud which is provided with standard ⅝″-27 thread for mounting on an upright stand. The stud is easily removed from the stand when the microphone is to be carried by hand.

Bass response of dynamic microphones depends upon the cubic capacity of the acoustic cavity behind the diaphragm. In the 636, the dimensions of this cavity are held to limits that will permit excellent low frequency response without loss of level.

The Model 636 microphone is omnidirectional at low frequencies, becoming directional at high frequencies. This characteristic is a function of the microphone case and does not classify the 636 as a directional microphone.

The microphone diaphragm is E-V's exclusive Acoustalloy, modified for optimum modulus of elasticity in small diameter. Because case cavity size is directly proportional to diaphragm area, the reduced case dimensions are possible with no loss of efficiency. Acoustalloy permits smoother response over a wider frequency range and is practically indestructible under normal use, resisting high humidity, temperature extremes,

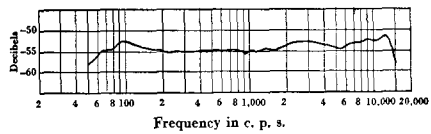

Fig. 14-36. Frequency response characteristics of the Electro-Voice model 636 microphone.

corrosive effects of salt air and severe mechanical shocks.

The built-in blast filter of the 636 effectively prevents wind and breath blasts from actuating microphone diaphragm, but does not impede passage of audio frequencies.

Frequency response (Fig. 14-36) is substantially flat from 60 to 13,000 cps. Smooth, peak-free response reduces feedback problems and increases effective microphone listening level.

Power rating: Hi—Z (0 db. = 1 volt/dyne/cm^2) is —55 db., providing excellent signal-to-thermal-noise ratio. Alnico V and Armco magnetic iron are combined in a non-welded magnetic circuit to develop 15,000 gauss, comparable to that available in microphone heads four times the sizes of that of the 636. The moving coil type generating element is free from proximity effect and requires no closely associated auxiliary equipment.

The Model 636 is specifically designed for high fidelity public address pick-ups. Its small size makes it inconspicuous, easy to disguise in PA staging. Wide-range frequency response, high fidelity characteristics and wide pick-up range make it particularly useful in audience participation and group work. It is recommended for all around public address work, indoors or outdoors, orchestra pick-up, auditorium and church installations and high fidelity recording.

SPECIFICATIONS

Impedance Selection:	Selection made at plug. Either Hi-Z or low impedance (150 ohms) selected by proper connection of cable leads. No. 1 terminal and plug shell are ground. For Hi-Z output, connect lead to No. 2 terminal. For low impedance, connect leads to No. 3 and No. 4 terminals. Low impedance is balanced to ground.
Stand Coupler:	Standard ⅝"-27 thread.
Cable Connector:	MC-4, built into the microphone stud, permits tilting microphone without strain on connector or cable.
Cable:	20 feet of two-conductor shielded, synthetic rubber-jacketed cable.
Case:	Sturdy, extruded brass. Finished in gleaming satin chromium.
Net Weight:	Including Stud, 15 oz.
Output Level:	Power Rating: Hi-Z (0 db. = 1 volt/dyne/cm^2) —55 db. RTMA Sensitivity Rating —151 db. voltage developed by normal speech, .018 volt.
Frequency Response:	60 to 13,000 cps. Substantially flat. See Fig. 14-36.
Polar Pattern:	Omnidirectional, becoming directional at high frequencies.
Diaphragm:	Exclusive Acoustalloy, modified for optimum modulus of elasticity. Diaphragm diameter, ⅞".
Element:	Moving coil dynamic. Uses Alnico V in magnetic circuit. All parts precision ground to close tolerances.

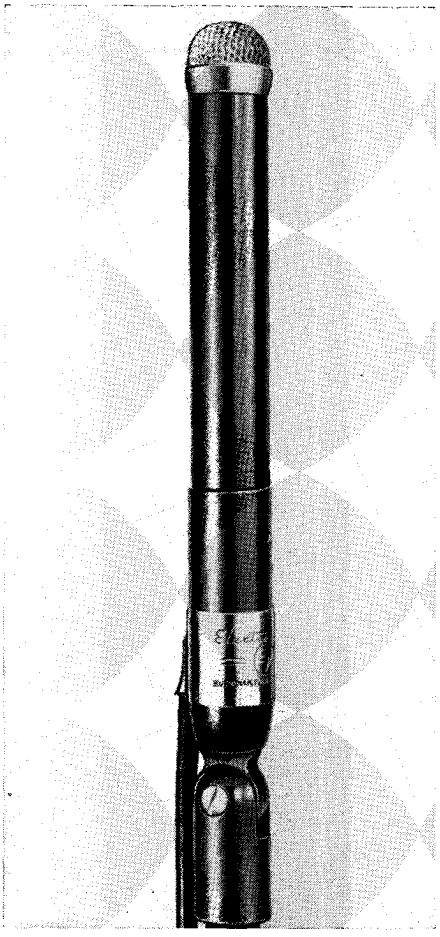

Fig. 14-37. The Electro-Voice model 655 dynamic microphone. (Courtesy Electro-Voice)

ELECTRO-VOICE MODEL 655 DYNAMIC

The Model 655 (Fig. 14-37) is specifically designed for high fidelity FM, AM and TV pickups. Its small size makes it inconspicuous; easy to disguise in TV program staging. Wide frequency response, high fidelity characteristics, wide pickup range and light weight make it particularly useful in audience participation shows and group work. In addition, it is recommended for all types of better quality public address, recording, paging and dispatching systems and radio communication.

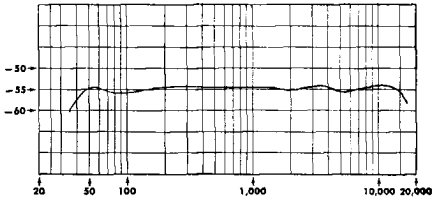

Fig. 14-38. Frequency response characteristics of the Electro-Voice model 655 dynamic microphone.

SPECIFICATIONS

Output Level:	Power rating: (0 db. = 6 mw/10 dynes/cm^2) —53 db.
Frequency Response:	40 to 15,000 cps ± 2.5 db. Hole in lower section of case permits easy control of bass response. See Fig. 14-38.
Polar Pattern:	Non-directional, becoming slightly directional at extremely high frequencies.
Grille:	Choice of smart, aluminum fluted grille (on 655) or "pop-proof" wire mesh grille (on 655-A).
Diaphragm:	Exclusive Acoustalloy, modified for optimum modulus of elasticity. Diaphragm diameter, ⅞".
Element:	Moving coil dynamic. Uses Alnico V in magnetic circuit. All parts precision ground to very close tolerances.

CHAPTER 15

Loudspeakers and Enclosures

A discussion of factors influencing behavior of reproducers at audio frequencies.

● It is unfortunate that so many personal prejudices and economic considerations enter into current discussions of high fidelity. If a group of people are asked to express their preference, the comparison should be presented to them in terms of "live" music (which true high fidelity would simulate indistinguishably) as opposed to low fidelity reproduction. Music appreciation is largely a matter of conditioned reflexes. There is a distinct danger in current trends to dull the senses and limit measurably the scope of tonal appreciation in future generations. Furthermore, the willingness of the public to pay for high quality reproduction is underestimated. The term "high fidelity" has been so misused as to almost destroy its value.

Modern designing knowledge makes it possible to produce vacuum tube devices with almost any desired frequency response. With suitable filter networks, it is not difficult to compensate electrically for the response curve of the ear at different intensity levels, as well as for frequency range limitations in broadcast and recording practice. But the variation with frequency in sound pressure from a loudspeaker is too violent to be disposed of practically in this manner. The point is that the selection and design of loudspeakers and associated enclosures probably deserve more contemporary engineering attention than any other field of associated development. The difference in the quality of the end result when a really good loudspeaker system is substituted for the reproducer in an average home radio is greater than even most technicians in the industry realize.

We are now in a new era of sound reproduction and radio transmission as a result of intensive research toward the development of better audio equipment. This trend has necessitated the development of improved loudspeaker systems capable of faithfully reproducing the bandwidth that has been made available by microphones and electrical equipment of advanced design.

Design Requirements

Laboratory tests have shown that a band from 40 to 15,000 cycles will transmit the full frequency range of music with good fidelity. The higher frequencies are necessary to bring out the fine overtone structure of musical instruments. Response curves themselves are by no means a complete measure of the performance of a loudspeaker. These curves are a guide in the development of loudspeaker systems when interpreted by trained acoustical engineers. Among many factors which are not apparent on axial sound pressure response curves are; spatial distribution, transient response, and harmonic and intermodulation distortion.

These factors, in conjunction with the frequency response, affect the subjective performance. Even though loud-

speakers have similar response curves, it is a matter of common experience that they do not sound alike. Considerable differences in sound quality can be attributed to the other factors mentioned. To a large degree, these considerations determine choice of crossover frequencies in multichannel systems.

Spatial distribution, sometimes called polar behavior, must be uniform at various angles from the axis of the speaker. If the polar pattern is irregular, the response balance will change as the listener moves off axis. A more desirable condition exists if the over-all pressure drops off axis while uniform response is maintained. Polar behavior of a conventional cone type loudspeaker is poor at high frequencies, while non-directional at low frequencies where the wavelength is large compared to the diameter of the cone. It has been shown that for a 12-inch loudspeaker in which the cone is assumed to act as a rigid piston over the entire range, axial sound pressure response must be raised 18 db. at 5000 cycles in order to maintain constant total radiation. If the speaker is designed this way, it becomes overly bright on the axis. If, on the other hand, a flat response on the axis is desired, the total radiation characteristic falls off by approximately 18 decibels at 5000 cycles. This gives an indication of the polar sharpening that may be expected with a single cone. The use of elements such as directors, fins or other masses mounted upon the cone do not compensate for the definite limitations in performance of a single cone. Such elements, which actually add no true radiating area when fastened to the cone, can only add mass to the motor system which will only reduce efficiency and high frequency response. The polar behavior can be altered to some extent by proper processing of the cone, with corrugations to vary the radial stiffness, but generally not to the degree necessary for highly critical applications. The best practice involves use of compression type driver units operating into properly designed horns for wide angle radiation at high frequencies.

Another major problem in high quality systems is distortion of both harmonic and intermodulation types. Intermodulation distortion is especially serious, since it results in sum and difference frequencies which are not harmonically related to the fundamental tone, and therefore can be especially displeasing to the ear. There are several sources of distortion in cone speakers. One cause is cone breakup at higher frequencies due to use of light cones without sufficient rigidity to suppress spurious modes of vibration. In this case, the whole cone does not move as a piston, and objectionable subharmonic modes are generated. Proper cone processing and sufficient cone mass are used to reduce flexing during operation. While this helps to decrease breakup difficulties, a better method in high quality systems is to restrict the operating range of the loudspeaker. In a woofer unit, the choice of a low crossover frequency is indicated.

Other forms of distortion can be caused by movement of the voice coil into regions of non-uniform flux density. The remedy here is proper design of the magnetic structure and voice coil so that the product of flux density and voice coil conductor length is a constant even at large operating amplitudes, as has been done, for example, in the Jensen G-610 low frequency channel.

The suspension system must be correctly designed in order to avoid non-linear stiffness effects which give rise to harmonic distortion. At the resonant frequency of the moving system, mechanical impedance reaches a minimum and the cone attains its maximum movement. Greatest distortion accordingly occurs at this frequency, because around this region the suspension system is the controlling factor. Over-all effect on the performance of the speaker can be minimized by placing the resonance of the loudspeaker at as low a frequency as possible, consistent with axial constraint necessary for stability. Use of a compliant cone annulus and a large spider help to lower the resonant frequency. Some loudspeakers are designed with non-linear suspension systems for the

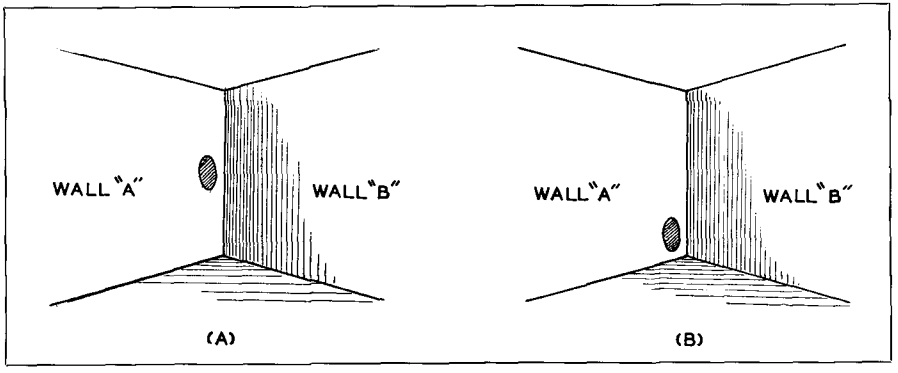

Fig. 15-1. (A) Speaker mounted adjacent to one side wall. Radiation into a solid angle increases low frequency efficiency. (B) Radiation into two solid angles doubles the effect obtained in (A).

very purpose of giving rise to high distortion which may give greater apparent loudness. Yet on critical listening over a period of time, it can be seen that this type of loudness boost is not desirable, as the sound is characterized by "muddiness."

It is also possible by use of magnetic fields of low energy levels, and more so in the case of speakers coupled to amplifiers of high internal impedance, to produce a false bass response due to undamped vibrations of the cone. The resulting "hangover" effect prevents clean bass response. In some cases, damping is attained by use of solutions giving soft, absorbent coatings at the cone annulus. The better method is through use of magnetic damping of the vibrating system. This method, while costly, gives better damping characteristics over the whole frequency range, in contrast to selective damping effects from coatings. High magnetic energy required for good magnetic damping, in addition to minimizing spurious modes over the entire operating band, and improving transient performance, results in higher loudspeaker efficiency as well.

Speaker Placement

Innumerable texts and common knowledge dictate the intelligent placement of loudspeakers in most large installations. Strangely, although the experimental facts have been widely published, optimum placement of speakers in homes and small rooms is rare. This ideal position is in a corner, preferably at the floor or ceiling junction with the walls. Fig. 15-1. This location has been shown to produce three or four times as much radiation of low frequency energy as mid-wall placement. Where semi-permanent special enclosures may be constructed, a triangular cabinet or close fitting flat baffle fitting the corner from floor to ceiling is desirable. However, simply moving a standard console radio to form a hypotenuse across the corner of a room results immediately in a noticeable improvement in low frequency radiation.

Completely enclosed cabinets eliminate cancellation of low frequencies from the interaction of front and backside radiation. However, the natural frequency of the speaker will be effectively dependent on the compliance of the enclosed volume of air, thus varying with the cabinet size. The use of absorptive material aids in lowering the resonant frequency of the system. The installation of a speaker in the wall between two rooms represents the extreme (and ideal) condition for complete enclosure. Fig. 15-2.

Loudspeaker Resonance

Loudspeakers reproduce sound as a result of being driven into forced vibrations by an electrical signal. In order to

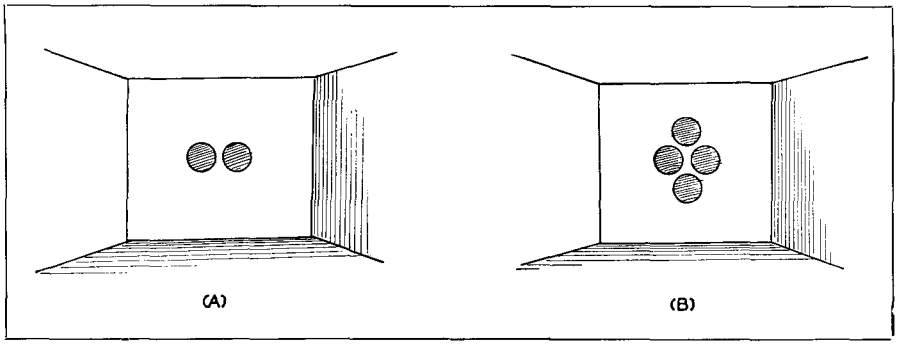

Fig. 15-2. Mounting speakers adjacent to each other increases low frequency response.

follow the pattern of the signal waveform perfectly, a loudspeaker system should theoretically have no resonant period within the audio spectrum. As a practical matter it is very difficult indeed to construct a loudspeaker system that will be satisfactory in all other respects and still have no natural period in this frequency range. Most loudspeaker systems will resonate at some low frequency between 50 and 200 cycles per second. These characteristics are principally dependent on the mass (m), the stiffness (s) and the resistance (r). The frequency of the natural period will be directly proportional to the stiffness and inversely proportional to the mass. *Hooke's* law states that the restoring force is proportional to the displacement, and on this basis it may be mathematically established that

$$f = \frac{1}{2\pi}\sqrt{\frac{s}{m}}$$

assuming the resistance to be negligible. When resistance is introduced into the analysis, the resonant frequency is lowered somewhat and the amplitude of the free oscillations in the system after a given displacement will decay exponentially to zero. The time constant of such a system will be the reciprocal of the damping factor $r/2m$.

When the resistance is increased to the point where it is equal to twice the square root of the product of the mass and the stiffness, the system will be critically damped and there will be no free oscillations. When the damping is less than critical there will be an "on" effect resulting from oscillation of the system at its resonant period whenever it is set into vibration and before it settles into a steady state condition, and a corresponding "off" effect when the driving force is removed. This is increasingly evident as the driving frequency approaches the resonant period of the system.

Resonance versus Damping

In discussions of audio problems it is frequently said that it is undesirable for a loudspeaker to be critically damped, and it is intended here to clarify the factors involved and the relative desirability of approaching or attaining critical damping. In designing an analyzer such as the mechanism of the ear, a compromise must be effected in terms of various desirable characteristics. For a very great selectivity it would be desirable that the individual sensing elements, or the elements that feed them, be highly resonant and very sharply tuned so that there would be a strong response to a single frequency to the exclusion of all others. Conditions of sharply peaked resonance, however, are inevitably associated with poor damping factors, and a system with perfect selectivity gained in this manner would suffer from confused patterns of on and off transient disturbances, long oscillation after the signal was removed, and total inability to follow the rapidly changing frequency pattern of speech and music. The ear is

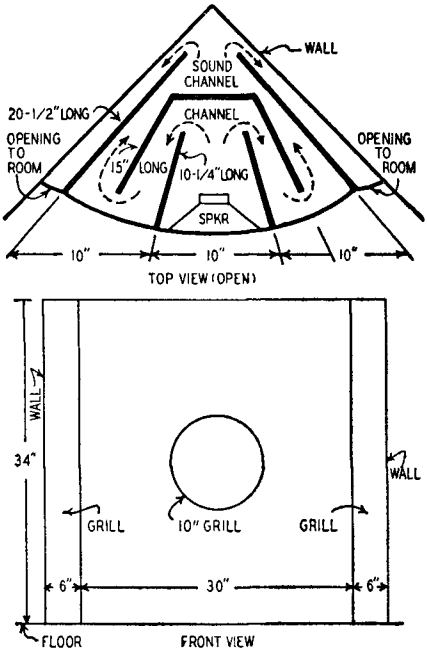

Fig. 15-3. Construction of a corner type enclosure for use with a folded exponential speaker.

heavily but not critically damped, and although there is no obvious hangover effect apparent in the persistence of audio sensation, it is capable of differentiating with remarkable accuracy between closely adjacent frequencies. The compromise is undoubtedly close to perfection.

If it were practical to set up, say 10,000 units in a loudspeaker system, each resonated at a single frequency, it would undoubtedly be possible to attain great efficiency but the damping factor would be very low indeed. The resulting sound would be a confused jumble when the system was required to follow the dynamic waveforms of speech and music. At the other extreme is a loudspeaker system so thoroughly damped that there is no resonant period of consequence in the entire audio range. A compromise between these two has often been attempted by running a response curve on the loudspeaker and then building an enclosure housing resonators designed to fill in the valleys of the curve. There are many reasons why such methods have not been notably successful but the principal one is the hangover effect from each resonator. The resulting sound gives music the effect of a selective reverberation time with respect to frequency. With certain types of popular music it is not displeasing but the general result is extremely unsatisfactory.[1]

[1]Goodell and Fritze: Radio & Television News, Radio-Electronic Engineering section. Vol. 13, No. 2, pp. 11-25.

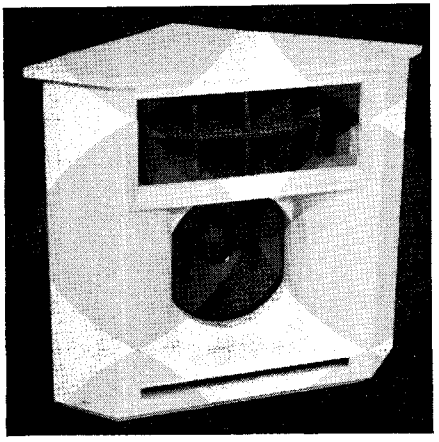

Fig. 15-4. Corner enclosure for a dual channel system with moderate dimensions.

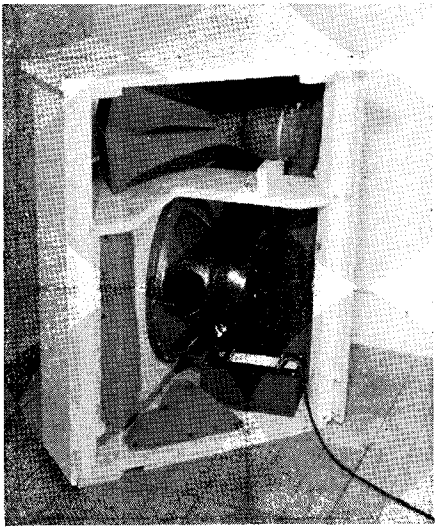

Fig. 15-5. Rear view of the enclosure shown in Fig. 15-4.

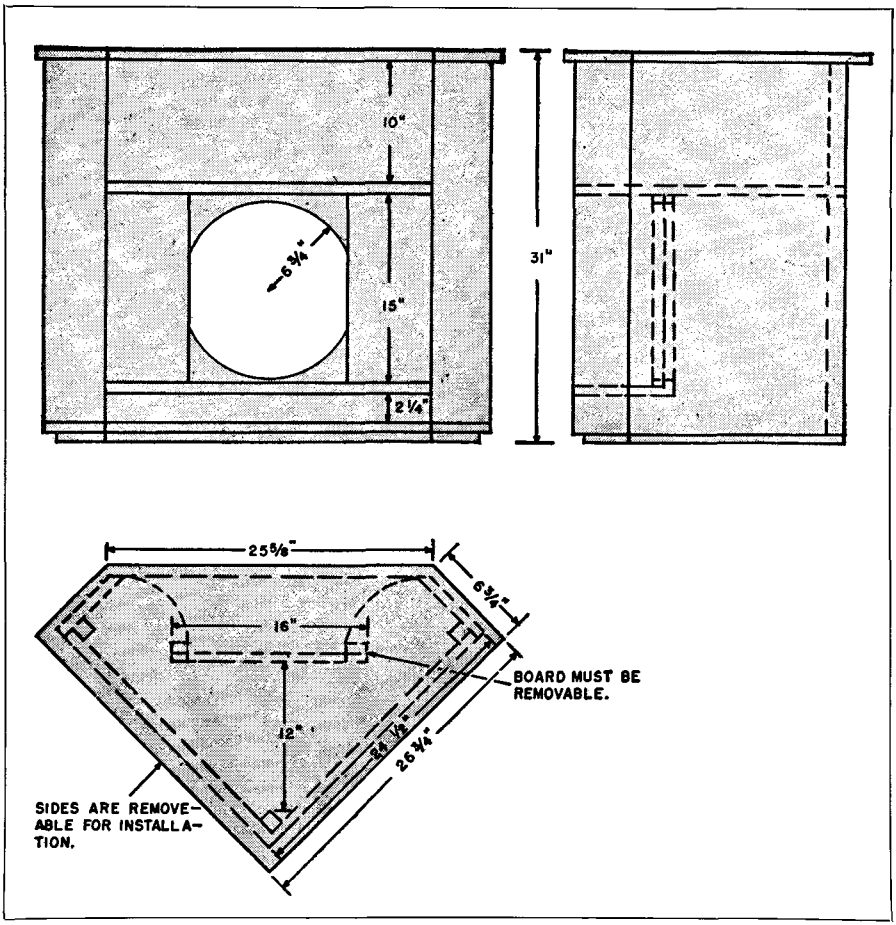

Fig. 15-6. Structural details of a corner cabinet for a single 15″ loudspeaker.

In the current state of the art the problem of generating very low frequencies efficiently with structures of reasonable dimensions has not been completely solved. A satisfactory well known method is to use a folded exponential speaker. Enclosures designed for use in corners, Fig. 15-3, may contain such a speaker or speakers and use the walls of the room as extensions and reenforcing surfaces. Another method takes advantage of the mutual radiation impedance characteristics of large numbers of relatively small cones in multiple clusters. A corner enclosure for a dual channel system that gives very good results with moderate dimensions is shown in Figs. 15-4 and 15-5. Structural details are shown in Fig. 15-6.

The most common method of obtaining satisfactory low frequency response is with completely enclosed cabinets using a port near the loudspeaker cone. These enclosures are designed to effect an acoustic phase shift within the cabinet so that the radiation from the port will be in phase with the speaker in a selected low frequency range. If a system of this kind is properly designed it does not necessarily produce serious resonant hangover effects, but neither does it conform to a condition of critical damping.

It is true that when a loudspeaker system is critically damped, response at ex-

tremely low frequencies is difficult to obtain with efficiency. The corollary to this, however, is that when critical damping is not at least approached, the waveform traced by the loudspeaker cone and impressed on the air does not conform with the electrical pattern of the driving signal and does introduce both on and off transients. From the standpoint of subjective listening this may be a desirable compromise for many observers. There are very few loudspeaker systems capable of smooth reproduction down to 30 or even 50 cycles. For those who have had the opportunity of enjoying such systems for a reasonable period of time with familiar signal sources, the unsatisfactory aspects of any of the compromise methods become very evident.

It would appear more desirable, where it is practical, to allow an adequate margin in the driving power for the deliberate introduction of a rising characteristic in the signal at very low frequencies to compensate for poor acoustic coupling and other factors rather than deliberately to introduce, or leave, resonances in the system to produce a peak that inevitably introduces spurious transients.

Almost all loudspeaker cones have a characteristic resonant period within the audio range. It is a not uncommon oversight to assume this as the resonant period of the system, including the enclosure, although this is clearly not the case. In most instances the loading effect of the enclosure will appreciably lower the resonant period, but it may sometimes have the opposite effect.

Electrical Damping

The effective impedance of the driving source is a consideration of prime importance in connection with the damping of loudspeaker systems. This is not to be confused with the proper matching of the loudspeaker considered as a load in terms of the required turns ratio for the output transformer. This problem has to do with the impedance seen by the loudspeaker looking back into the entire complex circuit of the amplifier output stages. With beam power tetrodes the plate impedance of the tubes is very high, and where degenerative feedback is not used, in sufficient quantities, the effective internal generator impedance of the output circuit will also be very high. Under these conditions there will be practically no electrical damping of the loudspeaker and its characteristic resonant period will be very pronounced with all the associated undesirable transient effects. With triodes, where the plate impedance is relatively low, the loudspeaker will "see" an effective impedance approximating half its rated impedance when it is connected to the corresponding output transformer tap. With either beam power tetrodes or triodes degenerative feedback may be applied to reduce this impedance still further, and with beam power tetrodes it is entirely practical to reduce it by a factor of four. Except for those conditions where resonance is needed to increase the low frequency response, it would appear desirable to come as close to critical damping by this method as possible.

Feedback and Phase Shift

The most basic characteristic of degenerative feedback in any system is to make the system independent of dynamic variations in the load. There are many factors that affect the impedance of a

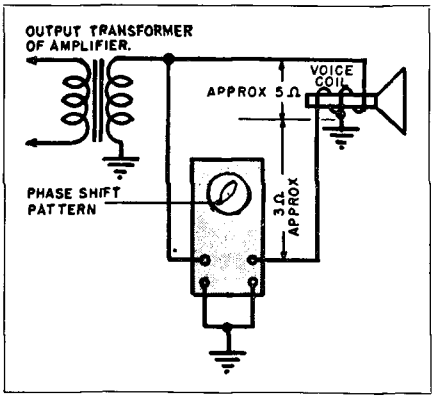

Fig. 15-7. Connection of voice coil circuit, using portion of winding as pickup coil for observation of characteristics.

loudspeaker under dynamic conditions, and it presents a load to the amplifier output circuits that is changing continually and abruptly in terms of the frequency characteristics of the signal. Applying feedback all the way from the output of the loudspeaker back into the amplifier is an intriguing possibility, but the difficulties of holding the phase shift characteristics within the required limits are enormous and no practical system has been developed. In connection with an investigation of such possibilities, the voice coil of a loudspeaker was tapped in accordance with the diagram in Fig. 15-7. The loudspeaker is shown opened up with a loop of wire indicating the manner in which the connection was made in Fig. 15-8. Slightly more than half of the voice coil was used to drive the loudspeaker cone. The remaining turns were connected as an exploring coil to observe the motion of the cone in terms of the voltage generated. The first observation was made with the cone mechanically blocked in order to determine whether voltage generated by transformer action between the driving section and pickup section of the voice coil might introduce an anomalous factor. The signal was swept through the audio range slowly at power levels appreciably higher than normal for this unit with no observable signal appearing in the pickup coil. The voltage appearing across the driving section of the voice coil was then applied to the X axis of an oscilloscope and the voltage of the pickup coil to the Y axis so that the relative phase relationship might be observed at various frequencies in terms of *Lissajous* patterns. Measurements of this kind made with various speakers indicate not only the great difficulties involved in designing a satisfactory system of feedback with a loop containing the mechanical motion, but also reveal a number of interesting phenomena. Undoubtedly careful design of the loudspeaker specifically for feedback operation might bring about a workable condition within a limited range so that a multiple channel system could be devised. A point that is well known but often overlooked is the fact that the relative phase shift across the mechanical system in most loudspeakers is very large. If there is real validity in recent investigations indicating that phase shift has importance in music reproduction, this condition should be considered as an important aspect of the problem. On the other hand, it may indicate strongly that relative phase shift in other portions of the over-all reproducing system can be of little consequence so long as it is neglected in the loudspeaker. There may also be some additional argument here for dual or triple channel systems where the phase shift in individual units may be minimized. In any event, it is undoubtedly true that this problem is not of sufficient importance to merit great attention until some of the more serious difficulties are corrected.

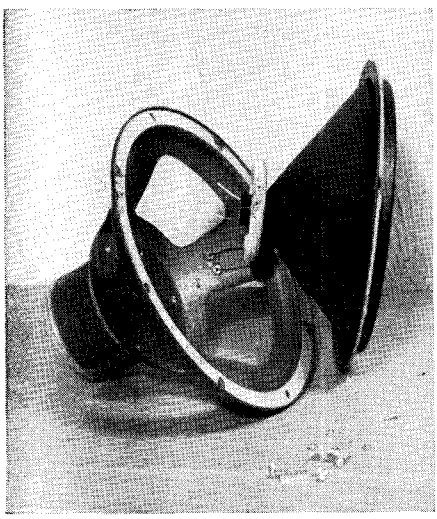

Fig. 15-8. Showing the manner in which the tap is made to the loudspeaker voice coil.

With one loudspeaker design in this investigation the feedback circuit from the sectionalized voice coil was connected back into the amplifier before the phase shift condition was observed. There was an immediate and obvious improvement in high frequency response, and for a brief period it was believed that with this unit such an arrangement might be practical. However,

it was discovered that the high frequency improvement was a result of mild regeneration and that the condition was not stable for all intensity levels.

LOUDSPEAKER ENCLOSURES

Flat Baffles

This is the simplest mounting for a cone type, direct radiator loudspeaker. The baffle functions to separate the front and back waveforms and to prevent cancellation effects between them. The success with which this is accomplished depends largely upon the size of the baffle, which, ideally, would be infinite. This is approximated where the loudspeaker is mounted in a wall between two relatively large rooms as in Fig. 15-1. The advantages of a flat baffle are that, it is a simple structure physically, it does not tend to introduce undesirable cavity resonances, such as are obtained with many cabinet designs, and where it consists of a wall, no floor space is taken up by the loudspeaker.

The principal disadvantages are that there is poor loading of the loudspeaker cone at low frequencies, and the low-frequency energy is transmitted to the air with poor efficiency. Another disadvantage is that the directional effects of the very-high frequencies are not compensated for by a flat baffle, and the high frequency distribution is unsatisfactory. With flat baffles, as with all loudspeaker housings, it is important that the material used be sufficiently heavy and well damped to prevent vibration of the baffle. This means that plywood baffles must be at least ¾″ thick and, if large, should be braced by heavy cross pieces or deadened with pads of acoustic material. The characteristics of flat baffles are desirable only when it is unnecessary or unimportant to reproduce the extremes of the audio spectrum. However, it is undoubtedly better to use a flat baffle, particularly a wall, than to mount the loudspeaker in the cabinet with other components, where the acoustic design is often unsatisfactory and tends to introduce hang-over effects and peaks in the response curve.

When the loudspeaker is mounted in a wall with a relatively large room on each side, it is practical to consider the structure in terms of a flat baffle. When the room at the rear is small, approaching the dimensions of a standard type of cabinet, other problems are involved. The effects begin to have importance when the speaker is mounted in the door of a relatively small closet.

At any frequency where the maximum dimension of the enclosure is less than a quarter-wavelength, there will be an undesirable effect on performance. In general, this appears as an increase in the resonant frequency and faulty reproduction of low frequencies. If this approach is the only practical method for a particular installation, it is worthwhile to line the enclosure with absorptive material. In general, such installations should be avoided, and if a closet is used, the spaces should be modified in accordance with the design of furniture-type cabinets. In other words, a suitable cabinet may be built into a closet, but simple mounting of the speaker in the door of a closet is far from ideal.

Vented Cabinets

The "bass reflex" type of cabinet is probably the most popular and widely-used basic design. Although this structure has many advantages when properly designed, it is not as simple in principle as is generally believed. It is quite easy for the amateur to produce very undesirable results with a bass reflex enclosure that is not coordinated properly with the characteristics of the loudspeaker unit used. Within certain limits, it is possible to obtain better low-frequency response from a bass reflex cabinet of minimum dimensions than from any other type. This is used to advantage where cabinets must be built with very small cubic content, but the size has often been carried to extremes that are misleading to the average observer. Many people have condemned this type of design on the basis of observing the results obtained with a very small cabinet. It must be recognized that there is no known method of generating satis-

it was discovered that the high frequency improvement was a result of mild regeneration and that the condition was not stable for all intensity levels.

LOUDSPEAKER ENCLOSURES

Flat Baffles

This is the simplest mounting for a cone type, direct radiator loudspeaker. The baffle functions to separate the front and back waveforms and to prevent cancellation effects between them. The success with which this is accomplished depends largely upon the size of the baffle, which, ideally, would be infinite. This is approximated where the loudspeaker is mounted in a wall between two relatively large rooms as in Fig. 15-1. The advantages of a flat baffle are that, it is a simple structure physically, it does not tend to introduce undesirable cavity resonances, such as are obtained with many cabinet designs, and where it consists of a wall, no floor space is taken up by the loudspeaker.

The principal disadvantages are that there is poor loading of the loudspeaker cone at low frequencies, and the low-frequency energy is transmitted to the air with poor efficiency. Another disadvantage is that the directional effects of the very-high frequencies are not compensated for by a flat baffle, and the high frequency distribution is unsatisfactory. With flat baffles, as with all loudspeaker housings, it is important that the material used be sufficiently heavy and well damped to prevent vibration of the baffle. This means that plywood baffles must be at least ¾″ thick and, if large, should be braced by heavy cross pieces or deadened with pads of acoustic material. The characteristics of flat baffles are desirable only when it is unnecessary or unimportant to reproduce the extremes of the audio spectrum. However, it is undoubtedly better to use a flat baffle, particularly a wall, than to mount the loudspeaker in the cabinet with other components, where the acoustic design is often unsatisfactory and tends to introduce hang-over effects and peaks in the response curve.

When the loudspeaker is mounted in a wall with a relatively large room on each side, it is practical to consider the structure in terms of a flat baffle. When the room at the rear is small, approaching the dimensions of a standard type of cabinet, other problems are involved. The effects begin to have importance when the speaker is mounted in the door of a relatively small closet.

At any frequency where the maximum dimension of the enclosure is less than a quarter-wavelength, there will be an undesirable effect on performance. In general, this appears as an increase in the resonant frequency and faulty reproduction of low frequencies. If this approach is the only practical method for a particular installation, it is worthwhile to line the enclosure with absorptive material. In general, such installations should be avoided, and if a closet is used, the spaces should be modified in accordance with the design of furniture-type cabinets. In other words, a suitable cabinet may be built into a closet, but simple mounting of the speaker in the door of a closet is far from ideal.

Vented Cabinets

The "bass reflex" type of cabinet is probably the most popular and widely-used basic design. Although this structure has many advantages when properly designed, it is not as simple in principle as is generally believed. It is quite easy for the amateur to produce very undesirable results with a bass reflex enclosure that is not coordinated properly with the characteristics of the loudspeaker unit used. Within certain limits, it is possible to obtain better low-frequency response from a bass reflex cabinet of minimum dimensions than from any other type. This is used to advantage where cabinets must be built with very small cubic content, but the size has often been carried to extremes that are misleading to the average observer. Many people have condemned this type of design on the basis of observing the results obtained with a very small cabinet. It must be recognized that there is no known method of generating satis-

factory low frequencies from very small cabinets and that a bass reflex design may help but can never compensate completely for such limitations.

Well-designed bass reflex cabinets are capable of excellent results. Many manufacturers provide such cabinets to accommodate their loudspeakers, and others make drawings available. It is usually more desirable to use the dimensions given by the loudspeaker manufacturer rather than to attempt to design such a cabinet without adequate facilities for measurement of the results. However, it should be mentioned that the manufacturer also sometimes makes compromises between optimum performance and space requirements because he knows that the average customer will not tolerate a cabinet as large as is necessary for the best possible results. Bass reflex cabinets, when properly designed, are capable of increasing the low-frequency response with a given cabinet dimension, decreasing the cone excursion required for a given low-frequency intensity, and thus lowering the distortion from excessive cone motion. They rarely provide satisfactory radiation as low as 50 cycles, and designs that are improper have a tendency toward resonant hangover effects at low frequencies. It is almost never satisfactory to place a loudspeaker made by one manufacturer in a cabinet designed by another. Specific design data, prepared by leading manufactures, is contained elsewhere in this chapter.

For the experimenter who wishes to investigate such cabinets on a cut-and-try basis, the following suggestions are given. It is well to start with a design that at least approximates the recommendations of the manufacturer. It is possible to adjust the characteristics considerably by changing the placement and size of the damping pads used inside the enclosure. The basic purpose of the damping pads is to absorb the middle and higher frequencies where destructive interference will result from radiation through the port. The port should be placed close to the loudspeaker opening, Fig. 15-9, so as to take advantage of the

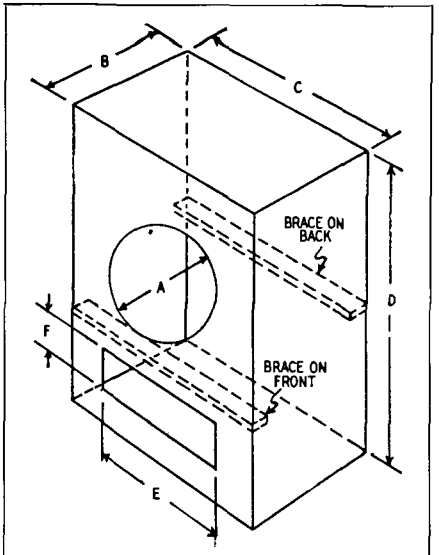

Spkr. diam. (in.)	Volume (in³)	Port area (in²)	A	B	C	D	E	F
18	12,600	87	15¾	14¾	26	33	15¾	5½
15	9,080	85	13½	12	23¾	31⅞	13½	4 13/16
12	6,990	60	10⅞	11	22	28⅞	10½	5¾
10	5,440	37	8⅞	10½	19¾	26¼	8⅞	4¼
8	3,210	25	6⅞	9½	16	22⅛	6⅞	3⅝
6	2,100	19	5½	7¾	14	19⅞	5½	3 7/16

Fig. 15-9. Construction of a typical bass reflex speaker enclosure.

mutual radiation impedance (in- phase simultaneous compression of the air between the two openings tends to reinforce the transfer of energy to the air). The characteristics may also be changed by adjusting the size of the port. The port should initially be made larger than the expected optimum and then tuned with sliding panels. This means that the initial size of the port should be greater in area than the area of the cone used.

One method of adjusting the size of the port is to apply a signal from a dry-cell flashlight battery to the speaker terminals periodically. When the signal is applied, there will be a distinct click as the dc impulse displaces the speaker cone. When the signal is removed, the speaker cone will return to its normal

position and will generate another sound. If the sound generated when the speaker returns to its rest position is also a relatively sharp click, the enclosure may be considered as providing satisfactory damping of the cone, and low-frequency hang-over effects will be minimized. If the damping is poor, the speaker cone will oscillate before returning to rest and generate a sound that hangs on slightly, ringing with a "rain barrel" effect. Adjusting the port will aid in obtaining the desirable double click.

Another method of adjusting the port is to apply a signal from an oscillator and adjust the port for maximum output at the lowest frequency it is possible to generate with reasonable intensity. One danger in this system is that it is often difficult to differentiate, when listening, between the true fundamental and the second harmonic, although with practice this can be learned.

Since the characteristics of the room greatly affect the low-frequency response, it is often worthwhile to make adjustments of this kind even in cabinets that are assumed to be properly designed by the manufacturer. Surprisingly, it is sometimes desirable simply to remove the back from such a cabinet and close up the port; success of the experiment will depend on the specific room in which the cabinet is used and the location of the cabinet therein. This does happen often enough to make it worthwhile trying in most locations. In any event, it is an interesting opportunity to observe the characteristics of the bass reflex enclosure as opposed to the simple, open-back cabinet in various room locations.

The only method for obtaining optimum results is to listen to a wide variety of signals with the cabinet in various positions and with all possible adjustments varied periodically. However, it takes a great deal of listening to a great many different types of signals on various systems to develop the ability to make such judgments with accuracy. It is very, very easy to be fooled by the signal source, the characteristics of your own hearing at any given time, and dozens of other variables. The same observations should be made while listening in various parts of the room. A system may be adjusted for excellent reproduction from one listening position and yet turn out to be most unsatisfactory for other locations. Hours may be spent in making adjustments while listening in one location, and how disappointing it is to find that the results are far from optimum for the general spaces in the room.

Corner Cabinets

A distinct line cannot be drawn between wall mounting of loudspeakers

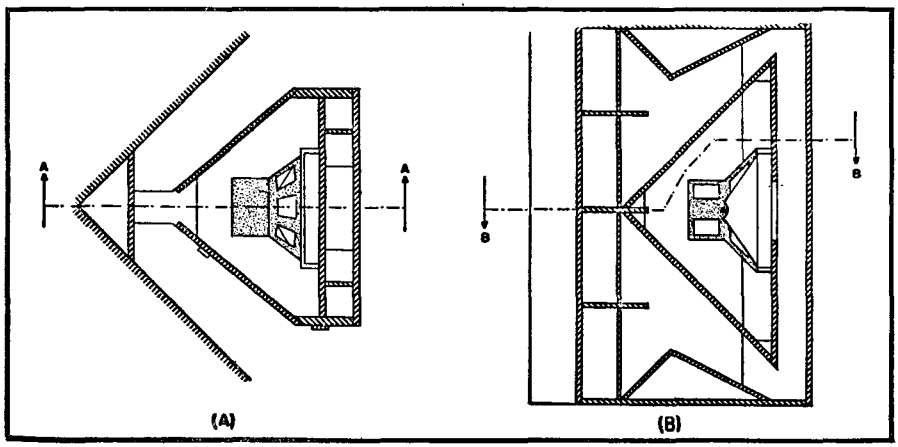

Fig. 15-10. The Klipschorn cabinet with 15″ reproducer. Handles frequencies down to 30 cps, yet occupies only 15 cubic feet. Comparable theatre systems require 60 cubic feet or more.

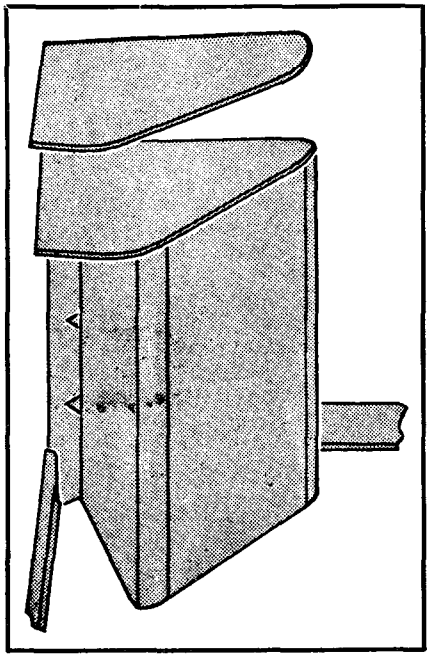

Fig. 15-11. Corner type cabinet, occupying only 15 cubic feet. Space above the cabinet is a mounting area for high-frequency horn.

that should be considered strictly flat baffle arrangements and those that partake of horn characteristics. In general, it is desirable to mount a loudspeaker, whether it be in a cabinet or in a wall, as close as possible to 2 or more wall junctions. The simplest explanation for this is that the walls then function roughly as the sides of a horn and aid in projecting the energy into the room. Obviously a corner placement is ideal from this standpoint. The principal reinforcement obtained with corner locations is at the low frequency end of the spectrum. However, since the high frequencies tend to beam, it is clearly desirable to locate the loudspeaker in a position where the angle between the center beam of the loudspeaker and the listener is minimized. In a corner location the maximum angle that will appear in any listening position between the focus line of the loudspeaker and the listener is 45 degrees. This same principle dictates the placement of a cabinet at the end of a rectangular room rather than along the side wall.

In many corner cabinets the rear radiation is guided back along the walls of the room to reinforce the low-frequency response from the loudspeaker. The corner cabinet designed by Paul Klipsch, Fig. 15-10 and Fig. 15-11, constitutes a folded horn that radiates frequencies as low as 30 cycles with remarkable efficiency. In this design the radiation from only one side of the loudspeaker is used. The walls of such an enclosure absorb the majority of the energy above approximately 1500 cycles, and it is necessary to use a separate unit for high-frequency reproduction.

It is entirely possible to combine the bass reflex principle with corner cabinet design. However, with corner cabinets it is usually practical to achieve equal or superior results with the rear radiation guided along the walls, and there is less danger of cabinet resonance. On the other hand, the bass reflex design is attractive because of its ability to minimize cone excursions for a given low-frequency radiation. Where adequate space is available it is probably better not to combine the two designs, but where maximum low-frequency radiation is desired with a maximum of space, the bass reflex corner cabinet is definitely indicated.

One other feature of the corner arrangement that is now becoming important is the fact that combining a television screen with a corner speaker cabinet results in the most efficient use of the room area for visual observations at minimum angles.[2]

Auditory Perspective

In motion picture theater installations, one of the important considerations is the matter of preserving the illusion that the sound comes from the performer on the screen. See Fig. 15-12. In working with these problems, it has been determined that the ratio of sound coming directly from the loudspeaker

[2]Goodell, John D.: Radio & Television News, Vol. 42, No. 5, pp. 35-118.

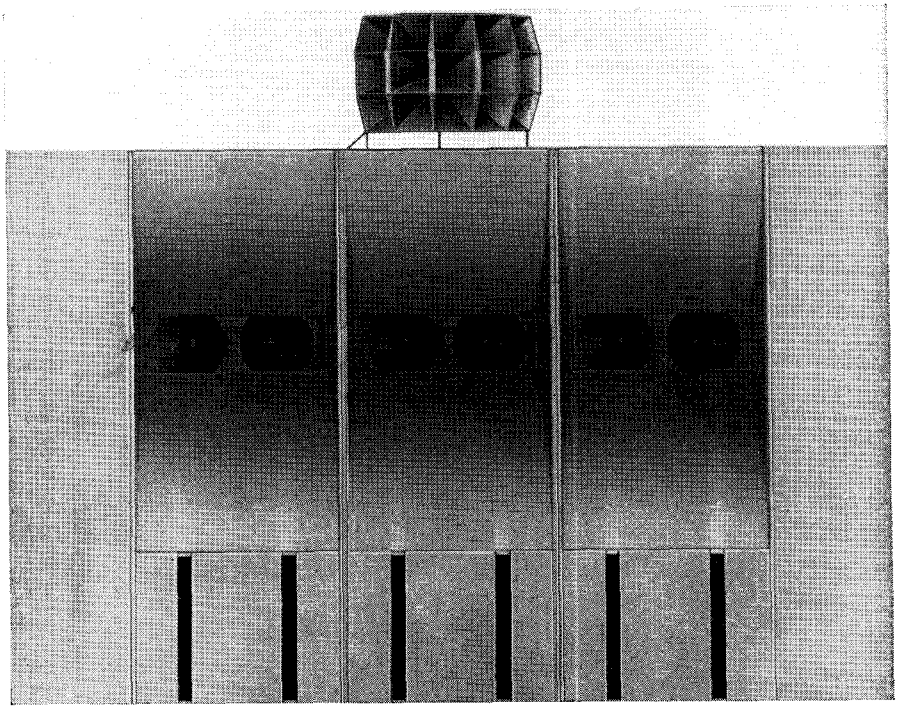

Fig. 15-12. The Altec Lansing A-1 and A1-X theatre speaker system. (Courtesy Altec Lansing)

system and the sound coming from the reflecting surfaces is extremely important. In these installations the engineer strives to keep the ratio high, with the majority of the sound reaching the listener directly from the loudspeaker units. In music reproducing installations, particularly in the home, the opposite effect is often desired. Live music rarely emanates from a point source as restricted in size as a loudspeaker cabinet.

Auditory perspective is an important part of the illusion, and it may be approximated by deliberately introducing a condition where a large portion of the sound reaches the observer from reflecting surfaces rather than directly from the loudspeaker. It is partially because of the important contribution to realism made by this effect that many people have found it desirable to place loudspeakers in rooms adjacent to the listening location. Other experimenters have found that placing loudspeaker units so that they face the wall away from the listening location at angles to produce reflections via the side walls increases the illusion of auditory perspective. In most installations it is worthwhile to experiment with effects of this kind, and often the results obtained will be startlingly successful.

There is one disadvantage in using the reflecting walls exclusively to distribute the sound energy. This is the fact that the very high frequencies tend to become absorbed under these conditions, and brilliance is sacrificed. The extent to which this will be observed depends partly on the reflecting characteristics of the walls. Obviously, very hard plaster walls will tend to reflect a large percentage of the energy. Draperies, wood, and absorptive materials of all kinds will reduce the high-frequency response observed from such a system. It is well to bear in mind that almost all materials tend to absorb high frequencies to a greater degree than they do the middle and low frequencies.

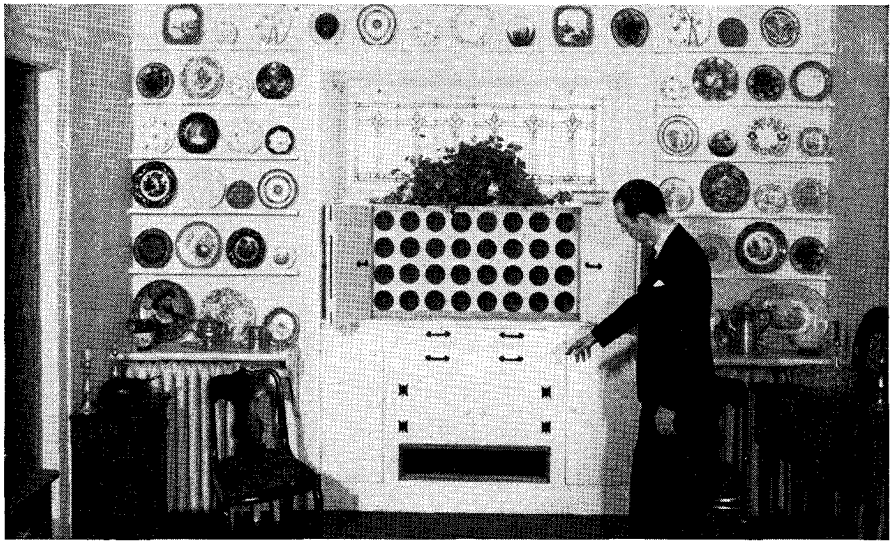

Fig. 15-13. A bank of thirty-two 6" loudspeakers, provides wide angle high quality sound distribution.

In spite of this consideration, there is often sufficient contribution to the realism of reproduction to compensate for some loss of brilliance. The audio engineer has a tendency to lose sight of the over-all effectiveness of a music reproduction system in the effort to retain the widest possible frequency response. With many commercial signal sources, some losses at the extreme high end are not only tolerable but desirable since the majority of the content is noise rather than music.

Multiple Speakers

Another method of achieving a "spread" source of sound, together with other desirable results, is to use a large number of small coned speakers. Thirty or more properly designed five- or six-inch loudspeakers mounted in a bank at one end of a long living room, Fig. 15-13, are capable of remarkably realistic reproduction. In such installations each speaker unit is required to handle so small a portion of the energy that distortion is reduced to a minimum, the lightness of the small cones makes good high-frequency reproduction possible, and the mutual radiation impedance of large clusters provides efficient low-frequency radiation. At very low frequencies, the cones function as a single unit to move a wall of air. At high frequencies they act individually to provide wide-angle distribution of the energy.

Since relatively inexpensive units may be used, it is often possible to make such an installation at a cost equal to or lower than a conventional system. It is usually desirable to mount the speakers very close together with a slight arc across the surface of the baffle to effect optimum distribution and reduce any tendency to focus. In large rooms as many as a hundred units in a bank have been used successfully. This sounds as though it would require a great deal of space, but a little consideration will reveal that the space factor is not serious. A bank of five-inch loudspeakers consisting of four rows of eight speakers occupies approximately only two feet by three and one-half feet of rectangular area. Wall space is often more available than floor space.

A common fallacy is the belief that loudspeaker efficiency at low frequencies requires a large cone. The size of the cone is principally related to power handling capacity. With 32 speakers

driven by an average power of three watts, only a fraction of a watt is handled by each unit. A peak power of fifteen watts involves less than a half watt per speaker. Thirty-two is a convenient number for series parallel connection to obtain conventional impedances. The loudspeakers should all be connected in phase.

General Considerations

Reproducing middle frequencies is comparatively simple. A fair-sized flat baffle and a 12-inch loudspeaker will produce reasonably satisfactory results. The extreme low frequencies are limited by two factors. The one most commonly understood is the cancellation effect that takes place if the front and rear waveforms from the loudspeaker are not properly isolated. The other problem is the matter of matching the impedance of the loudspeaker to the air, creating an air load that is capable of accepting and transmitting the energy. Where space and cost are of no consequence, this is most effectively accomplished with a large exponential horn such as is commonly used in theater installations. The *Klipsch* corner cabinet is another solution that does not require as much space. Corner cabinets of simpler design, bass reflex cabinets, or a combination are the most satisfactory compromises. Large banks of small speaker units may also be used effectively.

High frequencies are limited by the ability of the cone to respond suitably, which is affected by the mass of the cone structure and other factors. For very wide range systems, it is necessary to use at least two single speaker units (or one coaxial or triaxial) one specialized in low-frequency radiation, the other/others in high-frequency distribution. High frequencies are also limited by the tendency to beam and by the fact that most wall surfaces absorb the high frequencies and reflect the middle and low frequencies.

There is one other limitation on high-frequency response that is not generally recognized as having importance. This is the fact that high frequencies are absorbed by the air to a greater extent than are sounds in the middle and low range. Under some conditions of humidity and temperature the absorption of high frequencies by the air may be as much as three decibels in fifteen feet. This means, percentage-wise, that the energy will be reduced by half at a distance fifteen feet from the loudspeaker in the region of ten thousand cycles.

Maximum power output from an individual loudspeaker unit is limited not only by the excursion of the cone and the non-linear suspensions and power handling capacity of the voice coil, but also by inherent distortion characteristics of the air. For very high-level operation in quite large or absorptive rooms, it is essential to use more than one radiating unit for optimum results.

Labyrinth Enclosures

Labyrinth type cabinets, which may or may not be of semi-exponential design, are usually lined with absorptive material to eliminate high frequency distortion from interacting radiation between the speaker cone and labyrinth mouth. Reinforcement in a limited range of middle low frequencies is obtained by the phase shift resulting from the transmission time delay of the back wave through the labyrinth. This effect is greatest when the labyrinth is a ¼ wavelength and functions as a mechanical counterpart for a ¼ wavelength tuning stub with respect to impedance relationships. When radiation from the labyrinth mouth is maximum, the speaker diaphragm looks into a high impedance and is highly damped. At very low frequencies the phase shift may be practically eliminated and cancellation will take place.

Closed Box Baffles

The design of a loudspeaker enclosure and the choice of amplifier impedance must be based on subjective judgments by people as to what constitutes "quality" or perhaps simply listening "satisfaction." Unfortunately, no reliable sub-

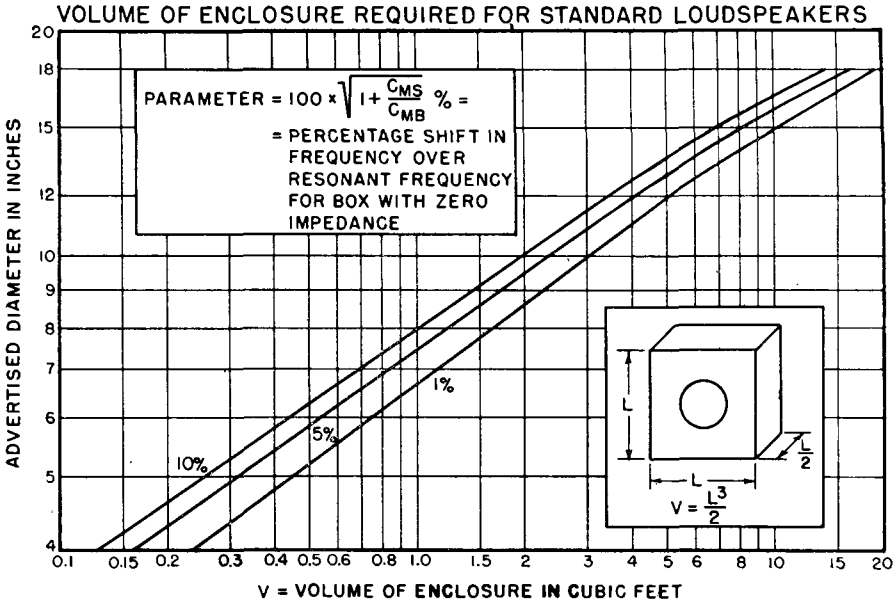

Fig. 15-14. Chart shows enclosure requirements, determined by means of formulae set forth in the text.

jective data concerning the low-frequency response of a loudspeaker are available. It is known that a flat response to frequencies as low as 50 cps is found desirable by most listeners. It is also believed that those loudspeakers that sound best generally reproduce tone bursts well although this requirement is better substantiated in the literature for the high frequencies than for the low. It is generally believed that for optimum performance the response curve measured in the listening room should be nearly "flat." In addition it is known that the ear has an integration time which is of the order of 0.05 to 0.10 sec. and the syllabic length for music and speech is of this same order of magnitude.

From the meager evidence just stated, we may expect that two of our design criteria are to choose the dimensions of the box so that the resonant frequency is as low as possible and to shape the low-frequency end of the response curve so as to pass faithfully a time-burst of 0.1 sec. duration.[3] A third criterion is to achieve this response with maximum efficiency.

An important factor determining the transient response of a speaker and cabinet is the amount of damping. The damping may be changed by choice of the amplifier impedance and by adjustment of the resistive component of the box impedance.

In general, as much damping should be provided as is economically feasible. It must be noted, however, that many listeners seem to prefer a slight transient hangover.

The first design criterion which we should attempt to meet is to extend the low frequency response to as low a frequency as possible. This means that the value of the compliance for the loudspeaker housing should be made as large as possible, so that the compliance of the loudspeaker suspension sets the resonant frequency.

From Fig. 15-14 the volume of a closed box baffle of dimensions L x L x L/2 can be determined from the advertised diameter of the loudspeaker and the tolerable shift in the resonant frequency. This chart has been checked

[3]Beranek, L. L.: "Electroacoustics," to be published by McGraw Hill.

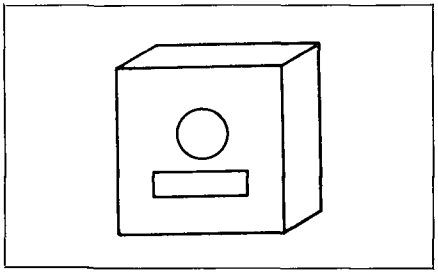

Fig. 15-15. A bass reflex type speaker enclosure, discussed in the text.

for a limited number of loudspeakers with satisfactory results. It should be noted that the most satisfactory performance is obtained with a small shift in resonant frequency, but larger shifts will give adequate performance for listeners who are not highly critical.

The principal purpose of an absorbent lining in a closed box baffle is to reduce the effects of box resonances at higher frequencies. The first box resonance of importance occurs when $f = c/L$, that is, when the depth of the box equals one-half a wave length of sound. For a box which is 2 x 2 x 1 foot in size, $f = 1128/2 = 564$ cycles per second.

The acoustical material selected should have a high absorption coefficient at this frequency and at all higher frequencies. Reference to tables of acoustical materials will indicate materials which absorb well at frequencies above 250 cps when used in thicknesses of one inch. The material should be placed on at least three of the six sides of the box such that no two untreated walls of the box are parallel to each other. Acoustical material may also be used to enlarge effectively the volume of enclosed air. If the air space is completely filled with a soft, light-weight material such as kapok, the effective volume will be increased about 16%.

The bass reflex baffle box is made by cutting an opening in a closed baffle box in the manner shown in Figure 15-15. This opening acts like an acoustical mass which resonates with the compliance of the box at some particular frequency. Usually this resonance is so set that its frequency is a few per-cent below the

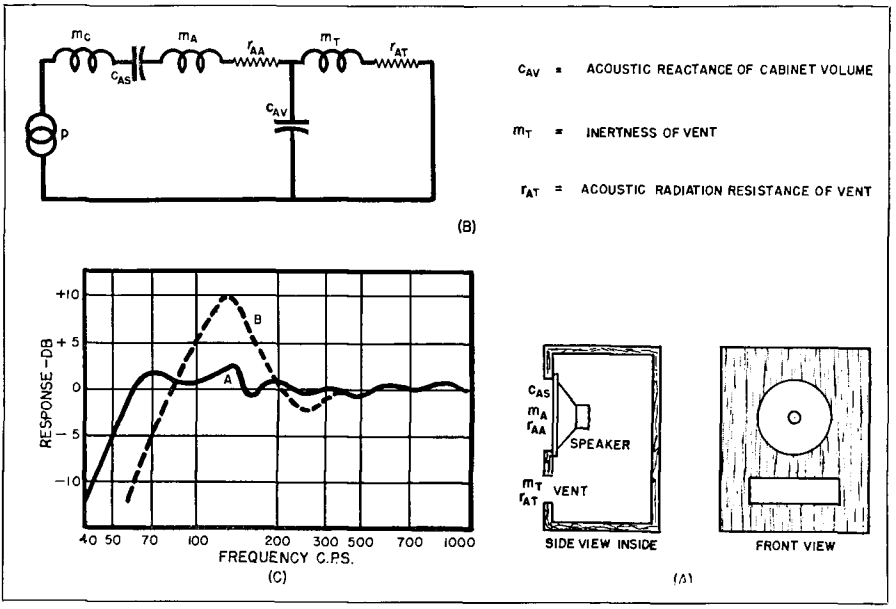

Fig. 15-16. (A) Physical details of the bass-reflex loudspeaker cabinet. (B) Electro-mechanical equivalent circuit. (C) Curve A is a typical frequency response of a bass-reflex speaker system. Curve B is frequency response of an open-back cabinet having the same volume plotted on the same graph to facilitate comparison. The vent should be cut close to the speaker opening.

principal resonant frequency if no opening were present. See discussion of Bass Reflex enclosures.

It is the opinion of most audio engineers that the design of a bass reflex type of baffle is sufficiently difficult that it should be attempted only by someone with adequate acoustic test facilities—at least until more definite information on its design is available. A reflex baffle designed for one loudspeaker will in general not be satisfactory for another because of the differences in resonant frequencies, diaphragm compliances and diaphragm diameters. See Fig. 15-16.

Loudspeaker Cones

Many shapes of loudspeaker cones have been developed experimentally, but the most efficient and satisfactory design is circular. Elliptical cones were early abandoned because of problems in mechanical structure and other disadvantages. Although flared cone sides are not as strong for a given weight as straight sides, the response is appreciably improved above 5000 cps. However, in speakers designed primarily for high power handling capacity and moderate frequency response, straight sides are used almost exclusively.

Most cones are made of specially fabricated papers. Where efficiency in quantitative transfer of energy is important at the expense of smooth response, very hard papers are used. More flexible structures are selected for high quality reproduction. A compromise is sometimes made between mechanical strength and smooth response by closely spaced annular rings in which the fibrous structure is deliberately broken down. Very soft material similar to blotting paper may be used to smooth the response and eliminate sharp dips and peaks still further in the response curve, but high frequency response is sacrificed. Another compromise is achieved in polyfibrous cone types where as many as three different degrees of hardness are used in the construction of a single cone. The cone is usually divided into three bands of approximately equal width with the material becoming softer and increasingly fibrous away from the voice coil.

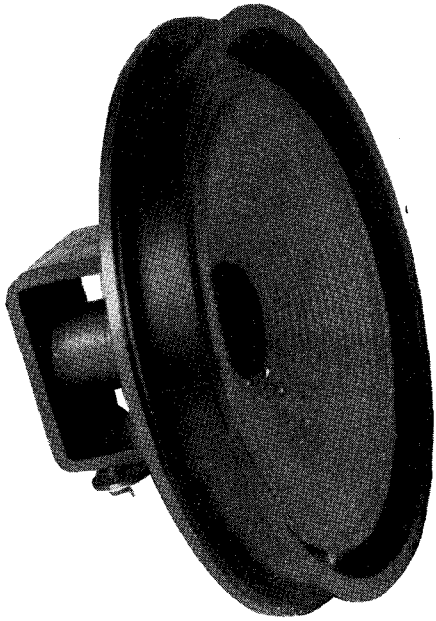

Fig. 15-17. RCA accordion cone, 7-inch permanent magnet speaker.

Accordion Cone

One of the most interesting developments is the so-called "accordion cone" speaker, Fig. 15-17. Here the outer edge of the cone floats without contact to the metal structure, and a supporting structure of cone material is folded back accordion-wise to provide centering. This small speaker has an exceptionally smooth response and an extended frequency range that covers from 80 to

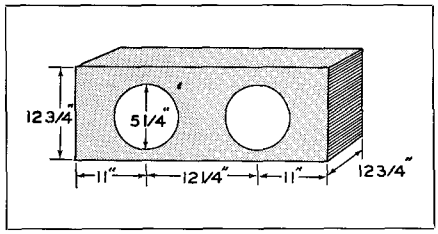

Fig. 15-18. Inside dimensions of infinite baffle loudspeaker enclosure of radio-phonograph unit shown in the sketch of Fig. 15-19.

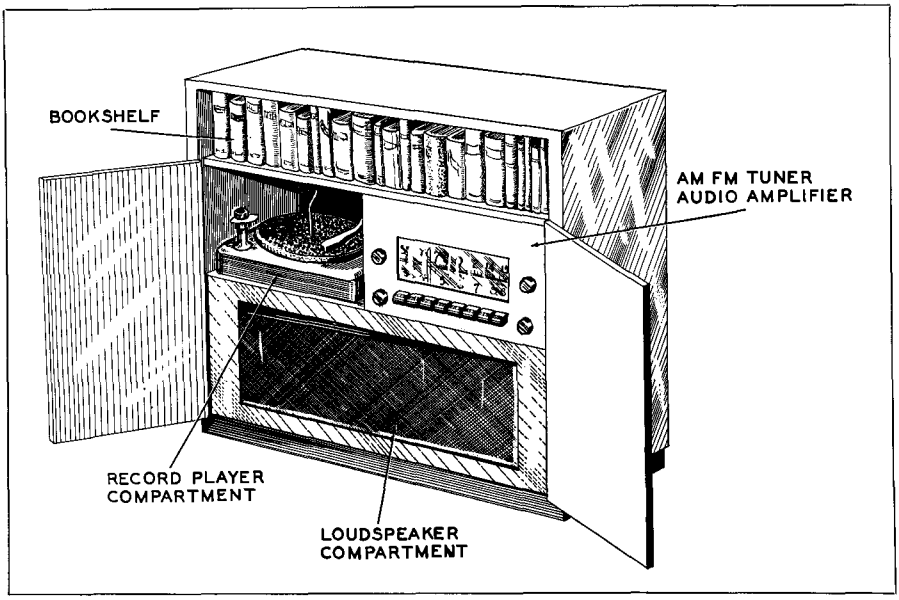

Fig. 15-19. Sketch of a radio-phonograph combination, using two RCA 7-inch accordion type loudspeakers housed in an infinite baffle enclosure.

7000 cycles-per-second with excellent fidelity, tapering off to 30 cycles down and 14,000 cycles upward. This type of folded edge cone support extends the lower frequency limit at least one octave below that obtainable with conventional construction for the same unit. The amplitude of piston swing at low-level low frequencies is a contributing factor in the effective transducing efficiency of the unit. Two of these speakers in a suitable cabinet (Fig. 15-18) will handle 6 watts complex wave, and are difficult for the most critical listener to distinguish from systems costing ten times as much. There appears to be no reason why this principle cannot be applied to speakers of larger cone diameter with equally desirable results. It is suggested that similar results might be obtained perhaps with better acoustic loading by folding the edge of the speaker cone forward to its support when physical depth is not a factor. A suitable enclosure (Fig. 15-18) may be built into a cabinet as shown in Fig. 15-19.

Coaxial Reproducers

While large installations usually involve low frequency speakers fed into folded horns and high frequency driving units acoustically coupled through honeycombed projectors, the recent development of dual speakers for home installations or other moderate power requirements favors coaxial mounting of two units (Fig. 15-20). This arrangement is mechanically convenient but appears to contribute little to the acoustic properties of the system. However, it is of importance to note that dual speaker arrangements require the coordinated design of each unit in order to obtain optimum results. It is possible to improve the range of a single large diameter speaker with the addition of a high frequency speaker and suitable dividing network, but it is fallacious to assume that a small cone diameter implies good high frequency response. In the smaller units it is generally worthwhile to supplement the usual cabinet enclosure with shutters placed over the high frequency opening so as to improve the spatial distribution. Some

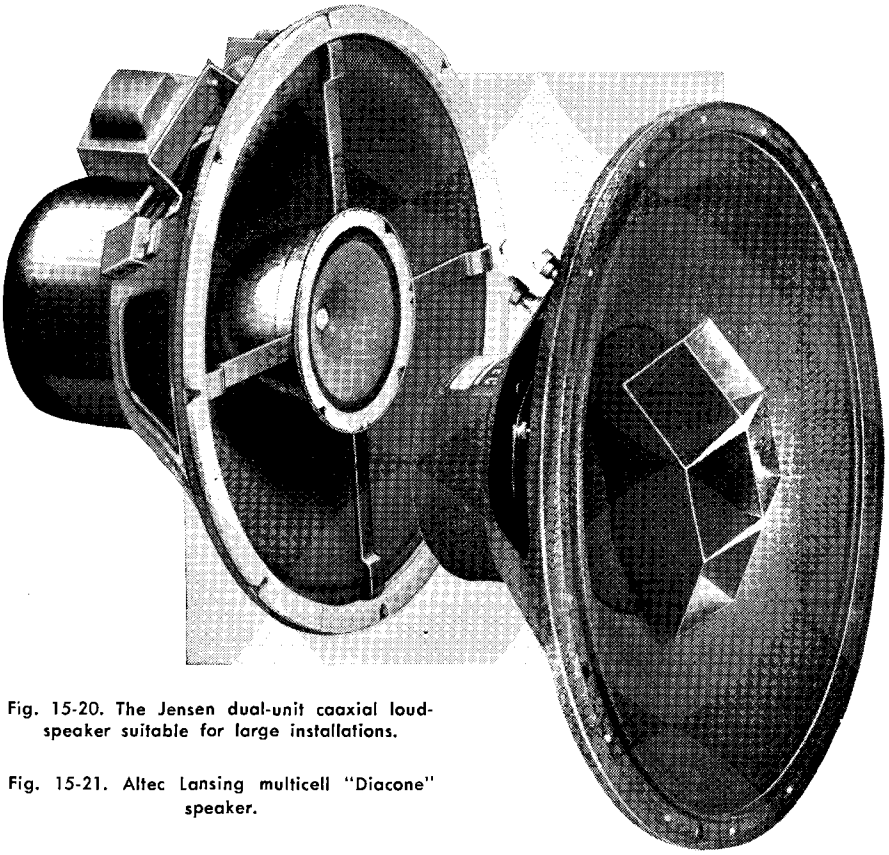

Fig. 15-20. The Jensen dual-unit coaxial loudspeaker suitable for large installations.

Fig. 15-21. Altec Lansing multicell "Diacone" speaker.

manufacturers use a small coaxial mounted multicellular horn for the dispersion of high frequencies, even in relatively low power handling units (Fig. 15-21). A "cutaway" of a high quality coaxial loudspeaker is shown in Fig. 15-22.

The Triaxial Speaker

A late development in a super quality speaker is the *Jensen* G-610 Triaxial loudspeaker, Fig. 15-23, possessing many new features and following the considerations set forth in early paragraphs of this chapter, especially in the manner of employing magnetic damping.[4]

Woofer Reproducer

Incorporated in this channel are a magnetic circuit providing 30 million

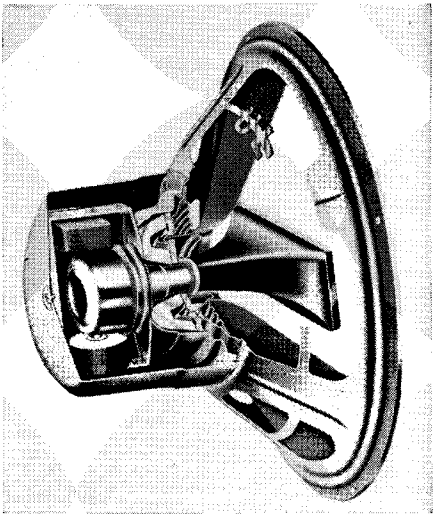

Fig. 15-22. Cut-a-way showing the construction of the University Model 6201 coaxial speaker. (Courtesy University Loudspeakers)

[4]Plach and Williams: Radio & Television News, Vol. 44, No. 5, pp. 66-86.

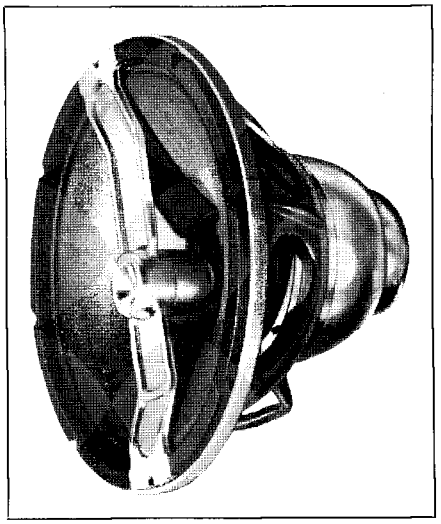

Fig. 15-23. The Jensen Model G-610 triaxial loudspeaker. (Courtesy Jensen Manufacturing Co.)

ergs energy from a 6½ pound Alnico V magnet, and an unusually large voice coil, three inches in diameter. The extremely high magnetic efficiency achieved makes the choice of amplifier internal impedance non-critical from the standpoint of loudspeaker damping.

A moderately stiff 15 inch diameter cone minimizes breakups even at high power levels over its operating band. The breakup problem would not be serious, however, because of the low crossover frequency of 600 cycles used, beyond which energy is transferred to other channels. A heavy machined aluminum cone housing carries the iron structures for the three channels.

Numerous possibilities were investigated for high frequency reproduction, including secondary radiators such as thin metal domes coupled to the woofer voice coil. Investigation of many commercial adaptations of these domes disclosed spurious modes of response and poor transient characteristics. While this method is common to lower priced loudspeakers and perhaps satisfactory in narrow range systems, it was considered highly unsatisfactory for a high quality reproducer.

Two additional horn type driver channels were designed to complete the coverage of the desired range, for it is not theoretically or experimentally possible to cover the full auditory range satisfactorily from 600 cycles up with only one channel. The requirements for efficient reproduction over a wide bandwidth in the upper register are contradictory. At frequencies approaching the lower limit of 600 cycles, a sturdy moving system and large air chamber clearances are necessary, whereas at the high frequencies, where the program energy is less and amplitudes are smaller, small clearances and very light moving systems are required for efficient operation. These opposing requirements dictated the use of two channels to cover the range from 600 cycles up. Horn type drivers were chosen in preference to direct radiator, or cone type, units, for a number of reasons:

(1) For a given magnetic energy, the additional loading given by a horn makes it possible to obtain much higher efficiency.

(2) Properly designed horns give good loading down to cut-off frequency, thereby reducing diaphragm movement necessary for a given amount of radiated power. This eliminates distortion effects caused by motion of the voice coil out of the magnetic gap and by nonlinear stiffening of the moving assembly suspension.

(3) It is possible to design for the desired directional characteristics by choosing the mouth geometry and flare.

The use of the *Jensen* Hypex formula horn[5,6] makes it possible to realize better loading near the lower cut-off frequency that can be achieved with the conventional exponential horn. The impedance characteristic of an infinite exponential horn is that of a simple high pass constant-k filter shunted by a constant mass. The input resistance deviates from a constant value over too large a portion of the frequency region near cut-off to permit good matching. In the *Hypex*

[5]Electronics, July, 1941.

[6]Patent 2,338,262.

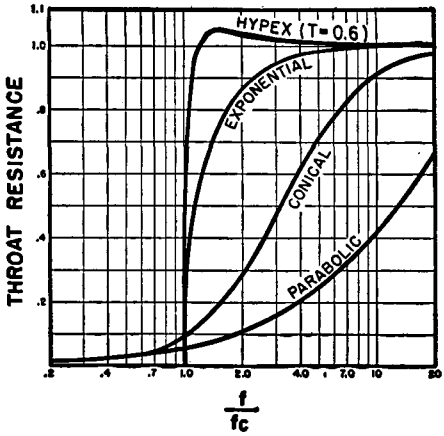

Fig. 15-24. The effect of throat resistance on the frequency response of various speakers.

horns the impedance characteristics are those of m-derived high pass filters, and are analogously adjustable. As can be seen from Fig. 15-24, the throat resistance characteristic can be made constant to almost cut-off frequency. Therefore, the better low end performance of the *Hypex* horns allows use of smaller horns than if the conventional exponential formula were used. The smaller horns are correspondingly more suitable for higher frequency use, and thus a gain has been achieved at both ends.

Years of experience with all types of diaphragm material have shown that cloth based phenolic material is most suitable for compression unit driver applications. The excellent damping characteristics, plus high rigidity assure freedom from spurious vibrations and distortion which are typical of metallic diaphragms often used. The high ratio of stiffness to mass in phenolic materials makes possible superior high frequency performance at high efficiency. Whereas metallic diaphragms tend to become fatigued and embrittled after severe and prolonged flexing, phenolic diaphragms retain their desirable physical properties throughout a long service life.

Midchannel Reproducer

The midchannel unit utilizes a rigid re-entrant phenolic diaphragm driven by a two inch voice coil operating in a flux density of 17,500 gauss. Operating efficiency is approximately 50 per-cent. Large clearances avoid non-linear stiffness effects which might arise due to air compression at large excursions in the sound chamber air space. The driver unit operates into a Hypex formula horn, the initial section being formed through the core of the woofer magnetic structure, and the final section being formed by the 15 inch woofer cone. Smooth performance extends down to and below the crossover frequency of 600 cycles, and up to the second crossover frequency of 4000 cycles.

High Frequency Reproducer

The miniature compression type high frequency unit, mounted in front of the woofer cone, is small enough so that radiation from the midchannel unit is not obstructed. Streamlined surfaces and precise placement for proper phasing afford a smooth crossover transition at 4000 cycles. Its small horn achieves wide dispersion of the acoustic energy by virtue of the small mouth size and Hypex flare. While its dimensions are not sufficiently small to allow this unit to approach the spatially ideal condition of a point source of sound, a suggestion of this condition was observed when the unit was originally placed at the center of the woofer cone. High frequency energy was radiated to the sides and even to the rear of the tweeter unit at sufficient levels to cause reinforcement and cancellation effects due to energy reflections from the woofer cone. Optimum lateral placement of the tweeter in the woofer cone was experimentally determined as the solution to restoring the smooth response as given in free space, while retaining the good spatial distribution of this unit.

While there was no restriction on the type of network to be used for the 600 and 4000 cycle crossover, a relatively simple 90 degree *LC* type with attenuation of 6 db. per octave was chosen. Networks with greater rates of attenuation change usually bring about losses in the transmitted band with a corresponding

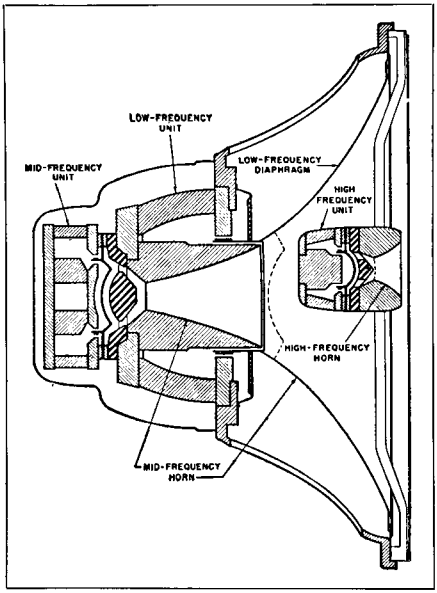

Fig. 15-25. Detailed view showing the arrangement of three component speaker units.

lowering of efficiency. Use of large air core coils made it possible to attain the unusually small insertion loss of 0.3 db. The use of an air core prevents distortion characteristic of iron cores, which are subject to variation of permeability with frequency and power level.

The individual units were designed with response characteristics such that their respective contributions were small outside the crossover regions. This condition, with the network chosen, made it possible to achieve a new low in distortion over the entire audio band. See Fig. 15-25.

To allow compensation for sound absorption variations to be expected under different room conditions, the three-step semi-fixed "Room Brightness Control" is available. By means of this adjustment (Fig. 15-26) the balance between high and low frequencies may be changed to correct for different selective absorption conditions.

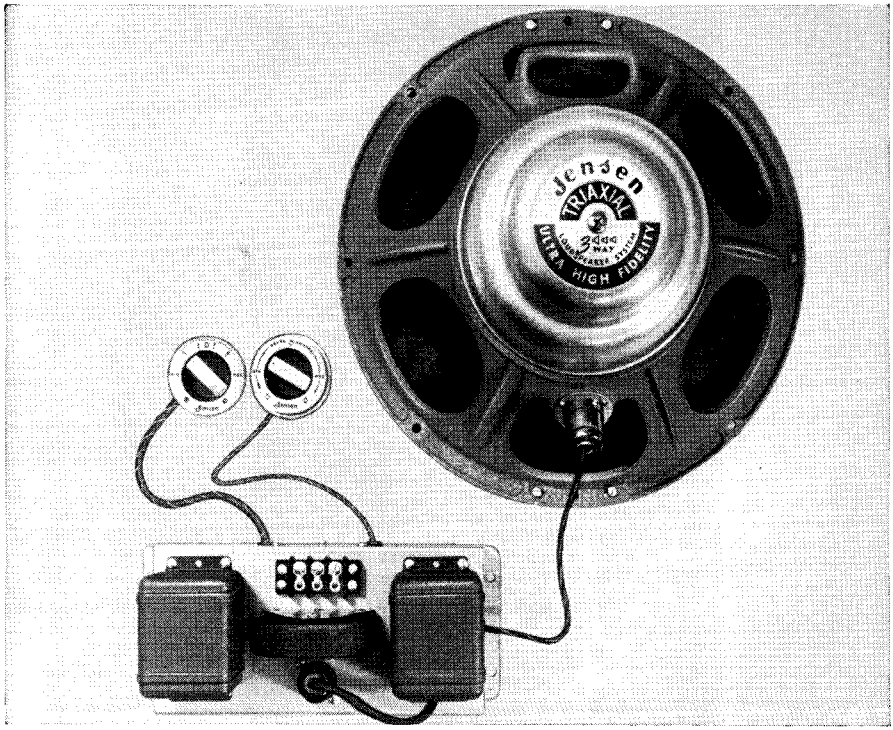

Fig. 15-26. The complete G-610 3-way triaxial system. Network chassis is shown mounted on baffle, but may be located on side or bottom of cabinet. (Courtesy Jensen Manufacturing Co.)

In cases where the frequency range of the source material or associated equipment is restricted, or where a higher-than-tolerable percentage of distortion exists, high frequency cut-off of the loudspeaker may be restricted. This is provided by an adjustable four-step, low-pass filter which restricts the response in graduated steps to as low as 4000 cycles. However, a long program of listening tests has clearly shown that, even when working with the frequency range "wide open," the G-610 is tolerant of distortion in source material.

An "L" pad level control allows precise over-all volume adjustment at remote mounting positions to make the loudspeaker suitable for use in remote installations without the need for additional external controls.

Distribution Angle

In connection with honeycomb horns, an interesting aspect of elliptically shaped speaker cones and rectangular horn mouths is often important. There is a widespread misconception regarding the angle of distribution achieved in terms of placement of the long axis. Actually the widest horizontal distribution angle is obtained when the long axis is placed vertically. Although this phenomenon is minimized by radial curvature of the horn mouths, the distribution may sometimes be improved by reducing this curvature along the axis and placing it in a vertical position. This is particularly true in rectangular horns that are not subdivided, but the effect is obtained at frequencies around 400 cps even in the case of multicellular designs. This result might be theoretically developed from the previously mentioned inverse relationship between the diameter of the sound source and the magnitude of the distribution angle.

Loudspeaker Behavior

It has been said that response curve compensation is relatively easy to achieve electrically, but this does not mean that there is no available method for accomplishing such results acoustically. In radio receivers the response is often characterized by a "boomy" quality caused by the resonant frequency of the cabinet in which the speaker is housed. This occurs when the resonant frequency of the air column in the enclosure falls in the lower audible range. Thus whenever the sound generated approaches this frequency, the air column is set into vibration and becomes a virtual source providing physical amplification. In engineering practice, it is almost always true that the disadvantage in one context can be turned to good account if properly applied. This phenomenon provides an excellent example.

Physical resonance resulting in effective amplification is a common effect. Whenever a sound is generated in the presence of a column of air at its resonant frequency, there will be a more efficient transfer of energy into the surrounding medium than at other frequencies. Thus, in an idealized case, if the response of a speaker were perfectly flat over the entire audible range except for a dip at one specific frequency, this fault could be compensated within limits by placing an "organ" pipe of the correct frequency in the vicinity of the speaker. Clearly this principle is capable of extension to correct the response of an indefinite number of frequencies. Resonators of this kind have been developed successfully. Designing such an installation to correct all of the faults in a loudspeaker response curve is beyond the realm of practicality. However, it is entirely feasible to install resonators in loudspeaker enclosures in such a manner as to "brighten" the high frequency response with excellent effect. Commercially this involves too great a cost for widespread application, but in specific installations the experimenter may be rewarded with interesting and remarkable results.

1. The term "blocked impedance" is used to describe the impedance measured with the speaker cone held immovable.

2. "Radiation impedance" is the increase in impedance caused by the effect of the transmitting medium on the vibrating surfaces. The terms "radiation resistance" and "radiation mass" (the reactance is generally positive), are the rectangular components.

3. The "Force Factor" of a speaker is the ratio of effective force on a blocked speaker cone to the current flow through the system creating the force.

4. The "Damping Factor" is the ratio $r/2m$ where r is resistance and m is mass. The time constant of the structure may be considered $1/(r/2m)$ and corresponds to the time for a decay to 1/2.718 of maximum.

5. "Critical damping" exists when $r = 2\sqrt{sm}$ where s represents stiffness. This means that a system returns to its static position from a displacement without any oscillatory motion. Electrical trigger circuits of the Eccles-Jordan type may be said to be critically damped.

6. "Transients" are the "on" effects of initial oscillation when a system is set into forced vibration. The steady state is reached when these oscillations are damped out. Transients also appear as "off" effects when the driving force is removed and final exponential decay occurs. It is clear that highly damped systems are important in loudspeakers. Music reproduction involves abrupt on/off effects continually, and oscillatory excursions of the cone result in serious distortion. The effect is similar to extremely reverberant conditions, or to a piano played with the loud pedal constantly depressed. The human ear is highly, but not critically, damped.

7. "Linearity" may be defined as the condition where displacement is exactly proportional to the driving force. It is also required that the system respond equally well in both directions of excursion.

8. "Amplitude" distortion occurs when the system does not follow Hooke's law (displacement is proportional to the applied force) equally well in both directions. This effect may be shown with a characteristic curve similar to the E_g-I_p curve of a vacuum tube amplifier stage.

If the curve, as shown in Fig. 15-27, is not linear, amplitude distortion results. In order to gain some conception of the importance of symmetrical response, consider the condition in a non-linear system where two-sine waves of frequencies a and b (a greater than b) are applied. The resultant frequencies will include a, b, a-b, $a+b$, $2a$, $2b$, $2a$-b, $2b$-a, . . ! The ear responds to this garble with accurate reproduction, and the central nervous system of the listener is confused accordingly. Realizing that this is a case far more simple than is

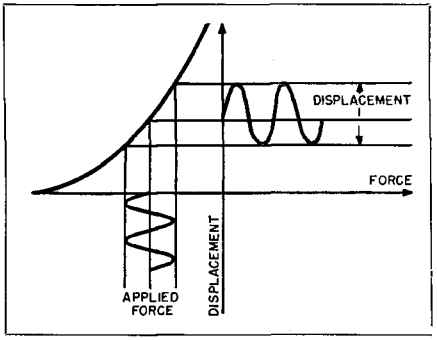

Fig. 15-27. Characteristic curves showing result of non-linear relationship between front and back radiation impedance.

ever encountered in practice, it is clear that proper enclosures for loudspeakers are of vital importance. If the speaker cone does not see the same impedance in both directions, serious amplitude distortion will occur.

9. In any system of damped vibration the amplitude decays exponentially after shock excitation, and the ratio between successive peaks is constant. The amplitude A of the waveform envelope may then be expressed as a time function.

$$A = a_{max} e^{\frac{rt}{2m}} \quad \ldots\ldots\ldots (1)$$

where a_{max} is the initial peak amplitude, m is the mass and r represents resistance. The logarithmic decrement per cycle is the natural logarithm of the

ratio a_{max}/b_{max} where b_{max} is the second positive peak, and is given by

$$k = \frac{rp}{2m} \quad \ldots\ldots\ldots\ldots (2)$$

where p is the resonant period of the system.

In idealized considerations of perfect piston action from the speaker diaphragm circumference, the resistive component of radiation impedance varies in approximate proportion to the frequency squared. In all real circumstances, sections of a diaphragm are vibrating independently and interaction occurs. In addition to its own radiation impedance, each (effective) diaphragm sees a positive or negative impedance resulting from the action of the other radiators. Thus, the total radiation impedance is the sum of these impedances as seen by each diaphragm.

Where r_r is the resistive component of its own impedance and r_{r_2} the resistive component of the associated impedances, the radiated acoustic power W of a diaphragm is given by:

$$W = (r_r + r_{r_2}) V^2 \times 10^{-7} \text{watt} \ldots\ldots (3)$$

V is expressed in centimeters/seconds and represents the rms velocity of the diaphragm. Thus, in the idealized piston at frequencies where λ is greater than piston circumference, radiation of constant power requires that $V = 1/f$. This condition is approached by designing the speaker with a fundamental resonant frequency as low as possible so that the action is largely controlled by the positive reactance of mass at lower frequencies. The resistance approaches 41.3 mechanical ohms per centimeter squared at wavelengths approximating $2\pi r/2$ where r is the diaphragm radius. This produces efficient transduction of electro-acoustic energy. Where λ is greater than $2\pi r$ the effective reactance is increased to a mass approximated by an air column of cross section corresponding to the diaphragm size and a height of $.857_2$ times the diaphragm radius.

Displacement of the diaphragm being given by V/w, it is clear that the high-level low-frequency radiation requires diaphragms large in size. This is not compatible with the spatial dispersion of high frequencies which would be ideally accomplished by a point source. Hence the aforementioned need for dual speakers in wide range systems.

Nearly all electrical phenomena that could be applied to the design of electro-acoustic transducers have been explored experimentally. Crystal speakers have been produced commercially for high frequency use in dual systems. Low frequency response is limited by the permissible swing without fracture of the element. In generating ultrasonic frequencies in the upper region of the spectrum (50 kc. to 600 mc.) crystal speakers have an important application. Magnetostriction effects are also widely applied in the lower ranges above audibility (20 kc. to 50 kc.).

Electrostatic effects have been used where one plate of a large condenser is free to move. Even harmonics may be canceled by placing the moving element between the two fixed perforated stators and making push-pull connections. Polarizing potentials, problems of electrical coupling to a driving source and other difficulties have hampered continued development.

Ribbon velocity speakers, where the conductor also functions as a diaphragm, have found limited application in high frequency designs. It is difficult to obtain efficient coupling to the air, and although the surface phase relationships are exceptionally even because of the equalized energy distribution, such units are not widely used.

In electroacoustic arrangements many of the principles of purely electrical systems are equally applicable. Thus the most efficient transfer of energy occurs when the impedance relationship of the speaker unit and the source of power are conjugate. Ideally, a vacuum tube should work into a speaker which represents a pure resistance. Moving coil construction most closely approaches this condition, and this is a factor in the wide acceptance of dynamic speakers. The blocked impedance appearing

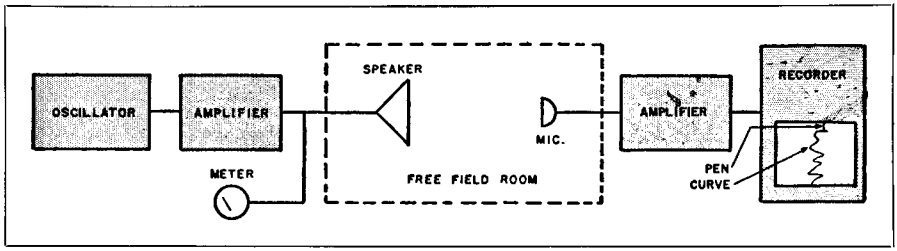

Fig. 15-28. Apparatus used to obtain response frequency characteristics of loudspeaker.

at the electrical terminals of moving coil designs appears as a series *R-L* circuit. At low frequencies approaching resonance in such structures, the impedance increases and a low impedance source contributes to a mismatch reduction of efficiency.

The greatest problem in converting electrical power to acoustic power is concerned with a satisfactory impedance match between the vibrating structure and the transmitting medium, which is generally air. This is the primary reason for the use of horns, and such devices may be properly considered as transformers for coupling the diaphragm to the air. Exponential designs have been most widely used because of the sharp rise in throat resistance at relatively low frequencies for a given horn length.

Cabinet Design Data for the RCA LC1A, 515S1 and 515S2 and other 15″ Loudspeaker Mechanisms

Direct radiator loudspeaker mechanisms for wide range sound reproduction are usually mounted in cabinets. In this system, there are four general parameters that influence the performance of the loudspeaker mechanism, namely, the internal acoustical impedance of the cabinet, the damping of the interior of the cabinet, the mounting of the loudspeaker mechanism, and the shape or the configuration of the outside of the cabinet. Since the effects of these parameters are independent of one another and occur in different portions of the frequency range, it is possible to analyze, measure, and segregate the different phenomena. For example, the size of the cabinet together with the loudspeaker mechanism characteristic determines the response in the low frequency range. The damping of the inside of the cabinet affects the response in the low and mid-frequency ranges. The mounting arrangement of the loudspeaker mechanism in the cabinet influences the response due to cavity resonance and diffraction in the high and mid-frequency ranges. The shape of the outside of the cabinet affects the response in the high and mid-frequency ranges due to diffraction. The above mentioned four different parameters that influence the performance of a direct radiator loudspeaker mechanism mounted in a completely enclosed cabinet will be discussed.

Measurement Apparatus

The loudspeaker response frequency characteristics depicted in the following paragraphs were all taken in the free field sound room at the *RCA Laboratories* in Princeton, N. J.[7] The response frequency characteristics were obtained by means of the automatic recording system shown schematically in Fig. 15-28. The output of an *RCA* Type 68B beat frequency oscillator is fed to an *RCA* Type BA-14A monitoring amplifier. The output of the monitoring amplifier is fed to the loudspeaker under test. The loudspeaker and microphone under test

[7]Olson, H. F.: "Cabinets for High-Quality Direct Radiator Loudspeakers," Radio & Television News, Vol. 45, No. 5, pp. 53-84.

are located in the free field room.[8,9] The sound output of the loudspeaker is picked up by means of an *RCA* Type 44BX velocity microphone. The microphone was calibrated by the reciprocity[10,11] method. The output of the microphone is fed to an *RCA* BA-11A preamplifier. This amplifier is compensated so that for constant sound pressure in free space the recorded output of the *Leeds and Northrup* "Speedomax" level recorder will be independent of the frequency.

Cabinet Volume

The considerations in this discussion will be confined to completely enclosed cabinets for the following reasons: Open back cabinets exhibit accentuated response in the region of cabinet resonance. It appears that it is difficult to control and subdue this resonance and thereby obtain a smooth response frequency characteristic. Therefore, open back cabinets have not been considered to be suitable for high quality wide range sound reproduction. The design of phase inverter or ported cabinets involves special tests and development work to obtain the optimum results. Unless this work is carried out with adequate test facilities, the performance will not be satisfactory. For example, equipment for obtaining the response frequency characteristics is almost mandatory. The only advantage of a phase inverter system is accentuated response in the low frequency region. This increased response is obtained at the expense of low frequency range. That is, the low frequency cut-off is lower in the completely enclosed cabinet than in the phase inverter or ported cabinet.

Since 15″ loudspeaker mechanisms are almost universally used for wide range sound reproduction, considerations will be confined to this size mechanism. Typical response frequency characteristics for 15″ loudspeakers for six different resonant frequencies are shown in Fig. 15-29. From these curves the builder can determine the characteristic he desires. As will be developed later the particular low frequency response may be tempered by the maximum volume of the cabinet

[8]Olson, H. F.; Journal Acoustic Society of America, Vol. 15, No. 2, 1943, page 96.

[9]Olson, H. F.; "Elements of Acoustical Engineering," D. Van Nostrand Co., New York, Second Edition, 1947, page 359.

[10]Olson, H. F.; RCA Review, Vol. 6, No. 1, 1941, page 36.

[11]Olson, H. F.; "Elements of Acoustical Engineering," D. Van Nostrand Co., New York, Second Edition, 1947, page 345.

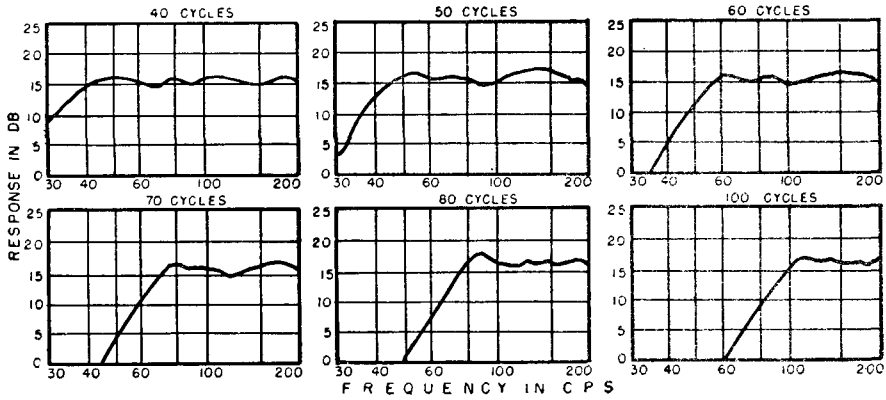

Fig. 15-29. Typical response frequency characteristics of 15″ direct radiator speaker. Mechanism mounted into completely enclosed cabinet. The resonant frequency of the combination of the speaker mechanism and the cabinet is given above each of th graphs.

which he is able to use. Since the characteristics of Fig. 15-29 are in terms of the resonant frequency of the loudspeaker mechanism and the cabinet volume, the next logical consideration is the determination of the resonant frequency of this combination.

The resonant frequency of a direct radiator loudspeaker mechanism located in a completely enclosed cabinet as shown in Fig. 15-30 is given by:

$$f_R = \frac{1}{2\pi}\sqrt{\frac{C_{MS} + C_{MB}}{m_c(C_{MS}C_{MB})}} \quad . \; . \; . \; . \; . \; (4)$$

where:

m_c = mass of the cone, coil, and air, in grams

C_{MS} = compliance of the suspension system, in centimeters per dyne

C_{MB} = compliance of the cabinet, in centimeters per dyne.

The compliance[12] of the cabinet, C_{MB}, in centimeters per dyne, is given by:

$$C_{MB} = \frac{V}{\rho_c{}^2 S_c{}^2} \quad . \; . \; . \; . \; . \; . \; . \; . \; . \; . \; (5)$$

where:

V = volume of the cabinet, in cubic centimeters

ρ = density of air, in grams per cubic centimeter

c = velocity of sound, in centimeters per second

S_c = effective area of the cone, in square centimeters.

The effective diameter of the cone of a "15 inch" loudspeaker mechanism is about 13 inches.

It should be mentioned in passing that Equation (5) assumes that the phase is the same for all elements of volume within the cabinet. If there is phase shift within the cabinet, there will be some deviation from the mechanical impedance obtained from distributed constant theory[13]. Actually, there is a phase shift

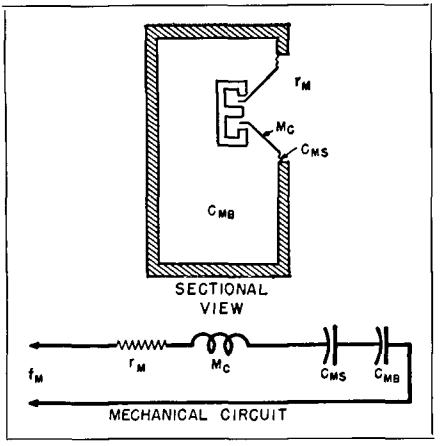

Fig. 15-30. Sectional view and mechanical circuit of a direct radiator loudspeaker mechanism mounted in a completely enclosed cabinet. In the mechanical circuit F_m = driving force, r_m = mechanical resistance of air load and suspension system, M_c = mass of the cone, voice coil, and air load. C_{MS} = compliance of the suspension system, and C_{MB} = compliance due to the cabinet volume.

within the cabinet for all frequencies. However, the phase shift decreases as the frequency decreases. Therefore, the discrepancy between the lumped and distributed constant theories will decrease as the frequency decreases. Equation (5) isused to determine the resonant frequency of the combination of the loudspeaker mechanism and cabinet volume. At this frequency, the dimensions of any practical cabinet will be a small fraction of the wavelength. Under these conditions, the phase difference between the elements of volume within the cabinet will be small. Therefore, the discrepancy between the lumped constant value of equation (5) and the distributed constant value is negligible.

The effective mass of the combination of the cone, voice coil, and the air load of the loudspeaker can be determined as follows: The loudspeaker should be placed in a flat baffle having dimensions of at least three feet by three feet. The resonant frequency, f_R, of the loudspeaker is determined by driving it from an oscillator and noting the frequency at which the maximum amplitude is ob-

[12]Olson, H. F.; "Elements of Acoustical Engineering," D. Van Nostrand Co., New York, Second Edition, 1947, page 152.

[13]Meeker, Slaymaker & Merrill; Journal Acoustical Society of America, Vol. 22, 1950, page 206.

tained. Now a known mass, m_w, is glued to the cone of approximately the same mass as the cone. The resonant frequency, f_{RW}, of this combination is determined by noting the frequency of maximum amplitude. From these constants the effective mass, m_c, in grams, of the cone, voice coil, and air load can be obtained from the expression:

$$m_c = \frac{f_{RW}^2}{f_R^2 - f_{RW}^2} m_w \quad \ldots\ldots\ldots \quad (6)$$

where:

m_c = effective mass of the cone, in grams

m_w = mass of the added weight, in grams

f_R = resonant frequency of the loudspeaker, in cycles per second

f_{RW} = the resonant frequency of the loudspeaker with the mass m_w added, in cycles per second.

The compliance of the suspension system, C_{MS}, in centimeters per dyne is given by:

$$C_{MS} = \frac{1}{(2\pi f_R)^2 m_c} \quad \ldots\ldots\ldots \quad (7)$$

where:

C_{MS} = compliance of the suspension system, in centimeters per dyne

f_R = resonant frequency of the loudspeaker in cycles per second

m_c = mass of the cone, voice coil and air load, in grams, and as determined from Equation (6).

Now all the constants of the system are known. The cabinet volume required to obtain a particular resonant frequency of the combination of the loudspeaker mechanism and cabinet can be determined from Equations (4), (5), (6), and (7). If the builder does not want to carry out the computations, he can obtain a reasonably accurate value of this resonant frequency from the procedure which will be explained in the next paragraph.

The resonant frequencies of the combination of 15″ direct radiator loudspeaker mechanisms and completely closed cabinets, as a function of the cabinet volume, are shown in Fig. 15-31. Graphs are given for six resonant frequencies, f_R, of the loudspeaker mechanism mounted in a large flat baffle. The resonant frequencies are 30, 40, 50, 60, 70, and 80 cycles. Graphs for heavy and light cones are given for each resonant frequency. These two weights represent the two extremes of combined cone, coil, and air load mass. It is possible to estimate whether the cone is heavy, light, or medium by inspection of different loudspeakers. The resonant frequency of the

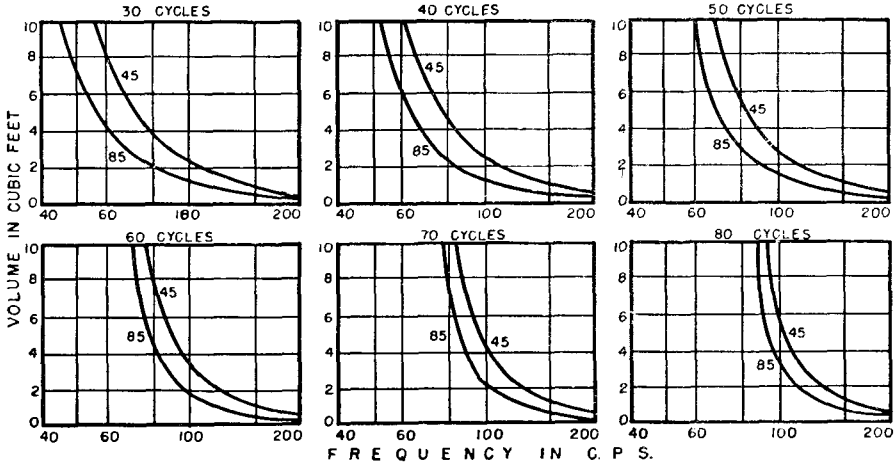

Fig. 15-31. The fundamental resonant frequency of the combination of a direct radiator loudspeaker mechanism mounted in a cabinet as a function of the cabinet volume. Numbers above graphs refer to resonant frequency of the mechanism, the numbers on the curves give the mass of the cone, voice coil and the air load.

loudspeaker mechanism can be determined by the oscillator method as outlined before or from the manufacturer's data. From the graphs provided, it is possible to interpolate between cone weights and resonant frequency of the mechanism to obtain the required cabinet volume from the resonant frequency of the combination.

Preferred Cabinet

The cabinet shown in Fig. 15-32 has been found to be particularly suitable for 15″ wide range loudspeaker mechanisms as, for example, the *RCA* Types LC1A, 515S1, and 515S2. The internal volume of the cabinet shown in Fig. 15-32 is 8 cubic feet. The cabinet can be scaled up or down in volume by appropriate changes in the dimensions. It will be seen that the cabinet is made of relatively heavy wood with suitable bracing for reducing the vibration of the large flat surfaces. It will be shown later that the vibration of the walls of a cabinet introduces large variations in the response frequency characteristic. The inside surfaces of the cabinet are treated with absorbing material to reduce the standing sound wave system inside the cabinet. It will also be shown that the standing sound waves in an undamped cabi-

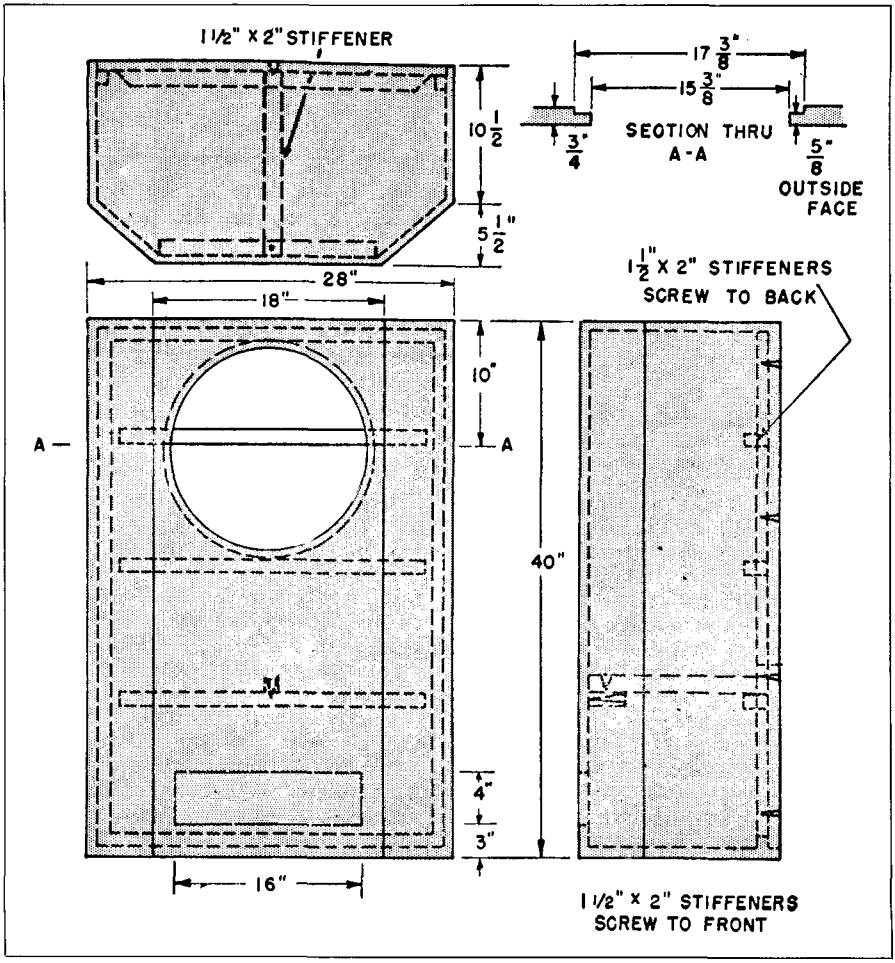

Fig. 15-32. Front, plan and side views of a properly designed loudspeaker housing.

net produce wide variations in the response frequency characteristic. The loudspeaker mechanism is mounted "flush" with the front surface of the cabinet. It will be shown later that the resonance and diffraction effects produced by a cavity in front of the cone will introduce variations in the response frequency characteristic. The outside configuration of the cabinet introduces variations in the response frequency characteristic due to diffraction. The outside configuration of this cabinet reduces the deleterious effects of diffraction upon the response frequency characteristic.

A cabinet of the type shown in Fig. 15-32 will be used in the sections which follow to illustrate the effects of cabinet wall vibration, standing sound waves within the cabinet, loudspeaker mechanism mounting in the wall of the cabinet, and the exterior configuration of the cabinet upon the response frequency characteristic. The experiments to illustrate these effects were carried out so that the result and response frequency characteristic would depict the effect of one phenomenon at a time. This procedure will be evident in the text describing the tests and the results obtained.

The *RCA* Type LC1A loudspeaker mechanism was used in the tests. The mass of the cone, voice coil, and air load of this loudspeaker mechanism is 85 grams. The measured resonant frequency of the mechanism used in these test was 35 cycles. The resonant frequency of the combination of the loudspeaker mechanism and the preferred cabinet shown in Fig. 15-32 was 52 cycles.

Cabinet Wall Construction

In order to obtain smooth response in the low frequency region, it is necessary to use a well braced cabinet. If the walls of the cabinet are allowed to vibrate, peaks and dips will be introduced in the response, because the vibration of the different panels of the cabinet causes the radiation of sound from these panels which may be in- or out-of-phase with the sound radiated by the cone. Furthermore, the vibration of the heavy, high "Q" panels of the cabinet introduces poor transient response, because the build-up and decay periods of the excited panels are very long.

In order to confine the effects of the vibration of the walls of the cabinet without any other effects which mar the response, a cabinet of the configuration and dimensions shown in Fig. 15-32 was used with the inside of the cabinet damped and the loudspeaker mounted flush with the front of the cabinet. The walls were made of thinner wood than

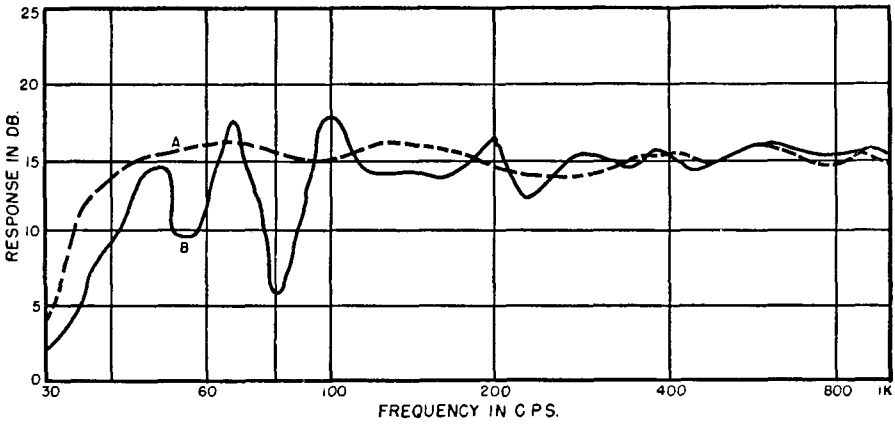

Fig. 15-33. Response frequency characteristic of a 15" loudspeaker mechanism mounted in a cabinet of the type shown in Fig. 15-32. (A) showing the elimination of deleterious effects due to the vibration of the cabinet by the use of heavy and well braced walls. (B) Response when deviations, i.e., walls made of thinner wood and the elimination of stiffeners, in the design of Fig. 15-32 were permitted.

that shown in Fig. 15-32. In addition, all bracing strips were eliminated. A typical response frequency characteristic of a loudspeaker mechanism mounted in a cabinet with vibrating walls is shown in Fig. 15-33B. It will be seen that the vibrating panels introduce wide variations in the response frequency characteristic. In this experiment, it is difficult to isolate the effect of the vibrating panels completely because the damping material mitigates the vibrations of the panels to some extent. The response frequency characteristic of a loudspeaker mechanism in a cabinet of the same dimensions as Fig. 15-32, but with rigid and well braced walls, is shown in Fig. 15-33A. The characteristics, Figs. 15-33A and B show that it is very important that a solid, well braced cabinet be used to insure a smooth response frequency characteristic. The walls of the cabinet should be made of wood ¾ inch thick. Additional strips of 1½ inch by 2 inch hardwood should be glued or screwed to the inside of the panels having large flat areas as, for example, the back and the front of the cabinet. Additional bracing can be obtained by running a 1½ inch by 2 inch tie strip from the front to the back of the cabinet as shown in Fig. 15-32.

Cabinet Damping

Standing wave systems on the inside of the cabinet will interact with the loudspeaker cone to produce variations in the response frequency characteristic. This is due to the variation in acoustical impedance presented to the cone by the complex sound wave pattern in the cabinet. For example, if there is a pressure loop at the loudspeaker cone, the acoustical impedance presented to the loudspeaker cone will be high and the motion of the cone will be retarded. If there is a particle velocity loop at the loudspeaker cone, the acoustical impedance presented to the cone will be small and the motion of the cone will be accentuated. The result will be corresponding dips and peaks in the response frequency characteristic. A typical response frequency characteristic of a loudspeaker mechanism mounted in the well braced cabinet of Fig. 15-32, but without damping material, is shown in Fig. 15-34B. In this case, the only deviation from the proposed cabinet of Fig. 15-32 is the absence of damping material. The ragged response in the region between 400 to 1000 cycles is due to standing waves within the cabinet. These standing wave patterns can be reduced, so that the effects upon the response frequency characteristic are negligible, by several different damping arrangements. One procedure is to line the front, back, and sides of the cabinet with 1 inch hair felt or the equivalent. The important thing is that the lining material should exhibit high absorption characteristics. Another procedure is to line the side walls and, in

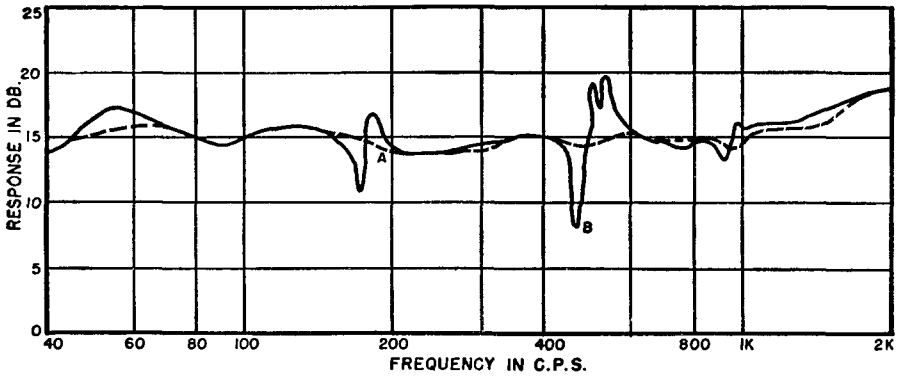

Fig. 15-34. Response frequency characteristics of a 15″ loudspeaker mechanism mounted in the cabinet shown in Fig. 15-32. (A) Good response obtained by treating inside of cabinet with damping material. (B) Poor response when damping material is omitted.

addition, hang a heavy blanket of hair felt across the full width of the cabinet half way between the front and the back. Still another method is to fill the entire volume with a fluffed out soft material such as kimpac. A typical response frequency characteristic, after the undamped cabinet has been treated with absorbing material, is shown in Fig. 15-34A. It will be seen that the variations in response exhibited by the undamped cabinet have been eliminated. Furthermore, the accentuated response at the resonant frequency has been reduced somewhat by the addition of the damping material.

Mounting Arrangement

The mounting arrangement of the loudspeaker mechanism in the front wall of the cabinet influences the response due to the resonances of the cavity in front of the mechanism. In addition, variations in the response are produced by reflection and diffraction from the circular boundary of this cavity. The standard mounting arrangement for loudspeaker mechanisms which has been used for years is shown in Fig. 15-35A. It will be seen that the cabinet wall forms a cavity in front of the loudspeaker. The resonances and anti-resonances of this cavity, as well as reflections and diffractions of this wall edge, introduce variations in the response frequency characteristic as shown in Fig. 15-36A (a). These variations in response can be reduced by the improved loudspeaker mechanism mounting arrangement as shown in Fig. 15-35B. It will be seen that the cavity in front of the loudspeaker mechanism has been materially reduced. The reflecting edge of the cutout in the cabinet wall has been completely eliminated. The sharpness of the edge has also been reduced which mitigates the diffraction effects due to this edge. The response frequency characteristic of a loudspeaker mechanism mounted as shown in Fig. 15-35B is shown in Fig. 15-36A (b). Comparing the response frequency characteristics of Figs. 15-36A (a) and 15-36A (b), it

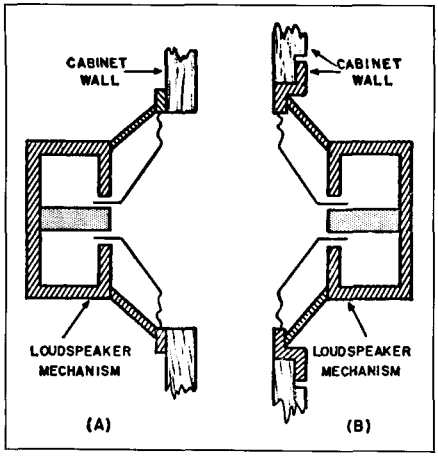

Fig. 15-35. Two different methods of mounting direct radiator loudspeaker mechanisms in wall of cabinet. (A) With mechanism mounted on back of cabinet wall. (B) Mechanism mounted flush with front surface of cabinet.

will be seen that a considerable improvement in response can be obtained with the mounting arrangement shown in Fig. 15-35B.

Subjective tests made upon the effect of the mounting height of the loudspeaker mechanism indicate that the most pleasing results are obtained when the top edge of the loudspeaker mechanism is located near the ear level. Therefore, every effort should be made to mount the loudspeaker as near this level as possible. Since most of the serious listening is done while the listener is seated, the average ear level is 38 to 44 inches. The upper edge of the loudspeaker mechanism in the cabinet of Fig. 15-32 is about 38 inches above the floor. The mounting height of the loudspeaker mechanism in this cabinet satisfies the mounting height requirements.

Cabinet Configuration

The outside configuration of the cabinet influences the response due to the diffraction effects introduced by the sharp discontinuities introduced by the edges of the cabinet. The most common cabinet for mounting loudspeaker mechanisms is a rectangular parallelepiped

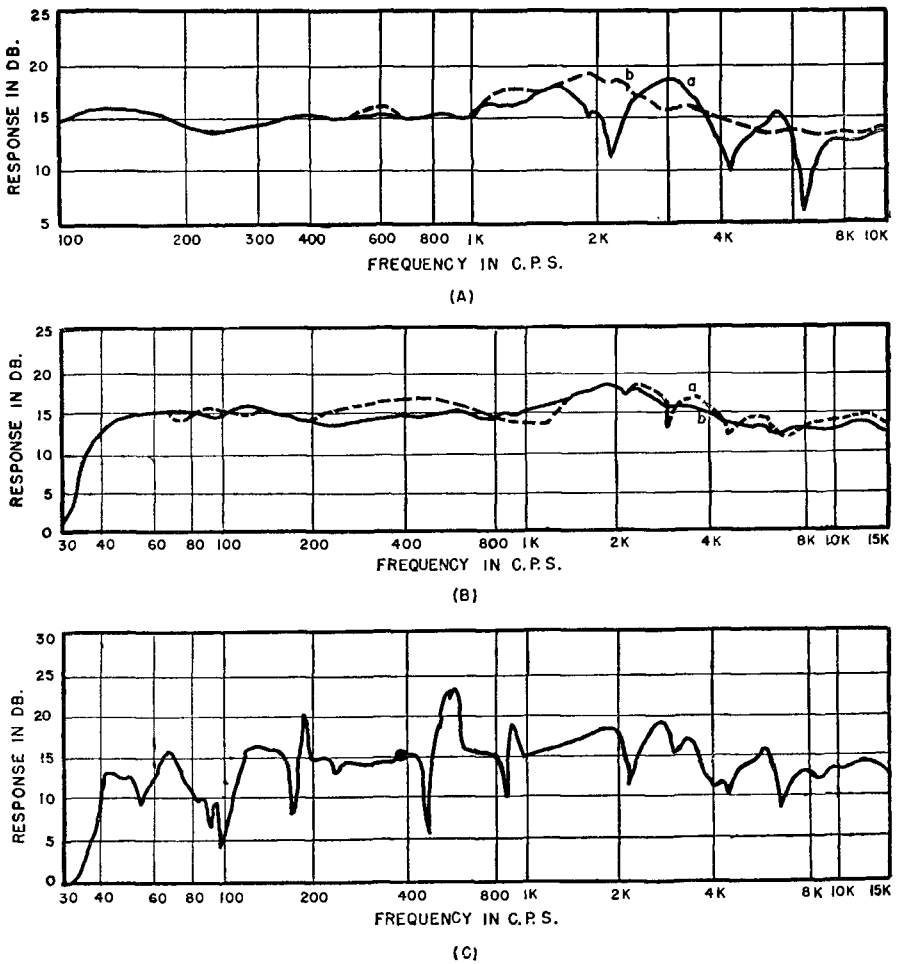

Fig. 15-36. Response frequency characteristics of a 15" direct radiator loudspeaker mechanism mounted (Aa) as shown in Fig. 15-35A in the cabinet of Fig. 15-32; (Ab) as shown in Fig. 15-35B in the same cabinet. The RCA Types LC1A, 515S1, and 515S2 duo cone loudspeaker mechanisms are designed for flush mounting in the wall of the cabinet. (Ba) Response frequency characteristic with speaker mounted in a cabinet of Fig. 15-37 with cabinet walls made of the same thickness material as shown in Fig. 15-32. Stiffeners were used on all inside walls. The inside of cabinet was treated with damping material. The loudspeaker was mounted flush with front of cabinet as shown in Fig. 15-35B. The only essential difference between cabinets of Fig. 15-32 and 15-37 is outside shape. (Bb) Response of speaker mounted in cabinet of Fig. 15-32. (C) Response of same speaker in cabinet of type shown in Fig. 15-37. In this cabinet design all precautions for obtaining smooth response were purposely ignored to show what the result would be. Deviations from good design included a rectangular parallelepiped outside shape, thin and unbraced walls, untreated inside walls, and speaker mounted on back of front cabinet wall as shown in Fig. 15-35A.

as shown in Fig. 15-37. The loudspeaker mechanism is usually mounted near the top end of the cabinet.

The cubic content of the cabinet shown in Fig. 15-37 is approximately the same as that of the cabinet of Fig. 15-32. The walls of the cabinet were made of the same material as that of Fig. 15-32. In addition, bracing strips were used on the large flat surfaces. The damping material was the same as that used in the cabinet of Fig. 15-32. The loudspeaker

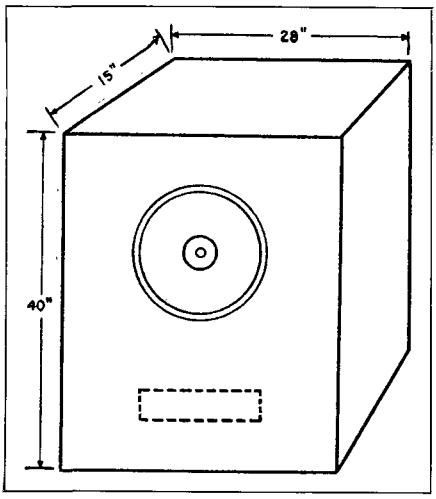

Fig. 15-37. Perspective view of a cabinet having the shape of a rectangular parallelepiped. The dimensions given yield the same volume as the cabinet shown in Fig. 15-32.

mechanism was mounted flush with the front of the cabinet of Fig. 15-37. With these precautions, the essential difference between the cabinets of Figs. 15-32 and 15-37 is the outside configuration. The response frequency characteristic of a wide range loudspeaker mechanism mounted in the cabinet of Fig. 15-37 is shown in Fig. 15-36B(a). The response frequency characteristic of the same loudspeaker mechanism mounted in the cabinet of Fig. 15-32 is shown in Fig. 15-36B(b). The characteristics shown in Figs. 15-36B(a) and 15-36B(b) show the deleterious effects of the diffraction from the symmetrical mounting of a loudspeaker mechanism in a rectangular parallelepiped. The physical explanation is as follows: Sound waves spread out in all directions from the loudspeaker mechanism. As the sound waves strike the sharp discontinuity at the edges of the cabinet, they are diffracted. The diffracted waves are sent out in all directions and, depending upon the phase between primary and reflected waves, either add to or subtract from the primary waves produced by the loudspeaker. As a result, corresponding variations in the response are produced due to the interaction between the primary and secondary waves. In the cabinet of Fig. 15-32 the sharp edge discontinuities have been reduced, which minimizes the reflection and diffraction effects.

As a final check, all of the precautions necessary for obtaining smooth response as outlined were purposely ignored to show what the result would be. A wide range loudspeaker mechanism was mounted in a cabinet of the rectangular parallelepiped type shown in Fig. 15-37. The walls were made of thin wood. The inside of the cabinet was not braced. There was no damping material used on the inside of the cabinet. The loudspeaker was mounted back of the cabinet wall, that is, not flush with the front of the cabinet. The same wide range loudspeaker mechanism used in all the tests reported herein was mounted in this cabinet. The response frequency characteristic obtained on this combination is shown in Fig. 15-36C. Comparing the characteristics of Figs. 15-36B(b) and 15-36C shows that the response of a good loudspeaker mechanism may be ruined by a poorly designed and built cabinet.

Miscellaneous Reproducers

Recent trends in the development of reproducers (loudspeakers) have been towards design of units for specific applications. Several representative units are described in the following paragraphs.

Electro-Voice SP12-B

The *Electro-Voice* "Radax-Twelve," Fig. 15-38, is an extended-range coaxial loudspeaker system, employing a mechanical crossover operating at the sixth octave. Power is distributed between two individual cones. Only bass sounds are generated by a low-frequency driver, while high-frequency sounds are transmitted via a high-frequency cone. Maximum flux for the 1½" edgewise wound aluminum ribbon voice coil is provided by an oversize Alnico magnet. This speaker utilizes a heavy ribbed, straight-sided, low-frequency driver cone for minimum transient distortion. The high-frequency propagator is decoupled from the bass

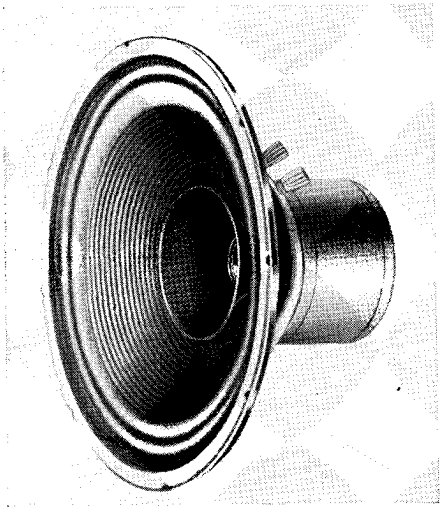

Fig. 15-38. Electro-Voice "Radax-12" extended range coaxial system. (Courtesy Electro-Voice)

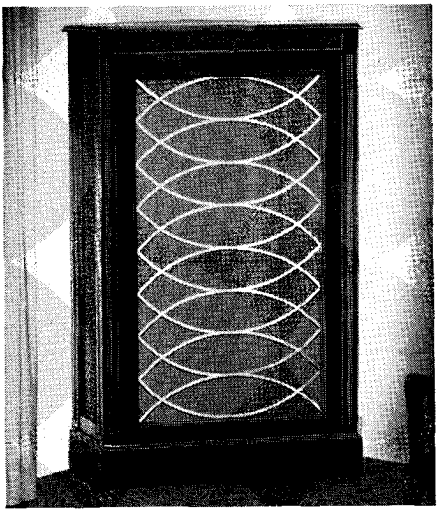

Fig. 15-39. Electro-Voice "Patrician" 4-way speaker system. (Courtesy Electro-Voice)

reproducer, thereby eliminating the most common source of intermodulation distortion.

Specifications

Frequency response range, in recommended enclosure: 75 to 13,000 cps 6 db

Maximum Instantaneous Power Input: 15 watts above 30 cycles, 20 watts above 100 cycles

Field Excitation: 1½ lb. Alnico V Orange Streak Magnet for 10% higher efficiency.

Radax Crossover Frequency: 4500 cps

Input Impedance: 8 ohms nominal 40% with feedback amplifiers.

Bass Cone Resonance: 41 cps

High-Frequency Cone Resonance: 500 cps

Magnet Structure: Weight 5 lbs. Finished in maroon hammertone baked enamel.

Binding Posts: Red, positive, and Black, negative, for correct phasing in multiple installations.

Cones: Specially treated for moisture and fungus protection. Outer compliance damped to prevent frame reflections from reinforcing or cancelling certain frequencies.

Frame: Rigid, drawn steel with polished chrome finish.

Dimensions: Over-all diameter, 12½", baffle opening 11", depth behind mounting panel 6⅜".

Weight: Net 7 lbs.; Shipping 7¾ lbs.

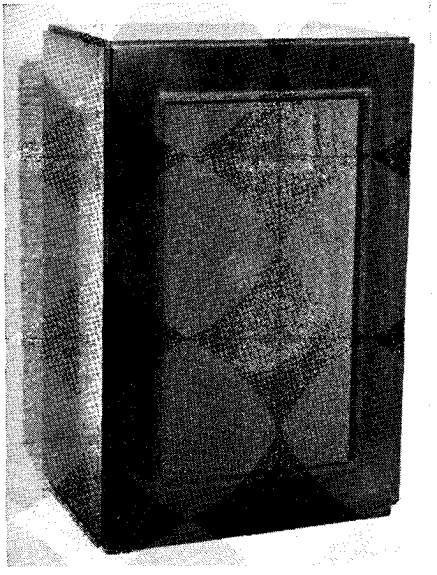

Fig. 15-40. The Jim Lansing 2-way loudspeaker system. (Courtesy Jim Lansing)

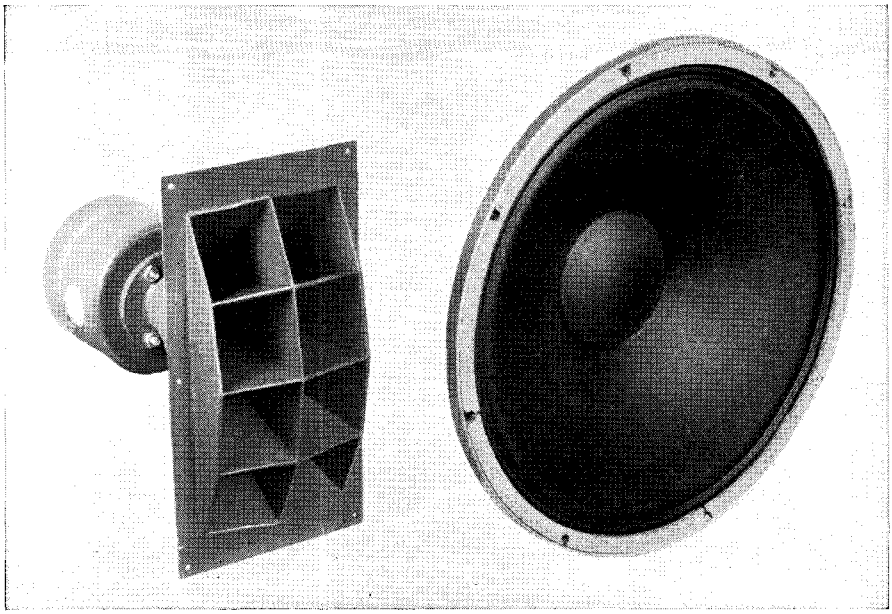

Fig. 15-41. Jim Lansing D-175H high-frequency speaker and D-130A low-frequency speaker. (Courtesy Jim Lansing)

Electro-Voice 4-Way Speaker System

The *Electro-Voice* Patrician, Fig. 15-39, includes the four following components: 18WVLF Driver, 12WLF Driver, T-10 VHF Driver and T-40HF Driver.

This 4-Way system divides the reproduced spectrum between four disparate drivers—each specifically designed to reproduce its own band with optimum distortion-free fidelity. The crossover frequencies are 200, 600 and 3500 cycles. Harmonic intermodulation and transient distortion are brought down to a minimum.

The 4-Way system is housed in a custom-crafted cabinet whose dimensions are 60″ high, 41″ wide, 30″ deep.

Jim Lansing Signature Speakers

The *Jim Lansing* 2-way loudspeaker system, Figs. 15-40 and 15-41, include a D-130A, 15″ low-frequency speaker and a D-175H high-frequency speaker in a cleverly designed enclosure. Ideally suited to custom installations, this system is capable of reproducing the entire audio range so necessary for the reproduction of sound. The enclosure is 37″ high, 24″ wide and 16″ deep.

Racon Tweeter, Model CHU-5

The *Racon* Model CHU-5 Tweeter, Fig. 15-42, has been specifically designed for high quality wide range audio

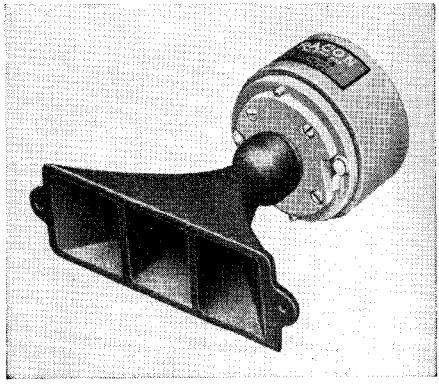

Fig. 15-42. Racon Model CHU-5 high-frequency tweeter. (Courtesy Racon)

systems. It provides clean and uniform response to 12,000 cycles, with usable output to beyond 15,000 cycles. When used with a 12 to 15″ cone speaker and proper network, it handles 25-30 watts of program material. The horn is built of cast aluminum and is flared for widest distribution pattern. The impedance of the driver is 15 ohms.

Atlas Model HR-2 Tweeter

The *Atlas* "Multi-Cellular" tweeter, Fig. 15-43, is a versatile high-frequency reproducer of advanced electrical, mechanical and acoustical design. The addition of this reproducer to an effective cone type speaker, provides an extended range of reproduction to 15,000 cycles. It features a heavy die cast sectoral horn which provides a smooth and uniform sound dispersion pattern. No complicated wiring or intricate electrical connections are required for connecting the HR-2 tweeter to an existing cone speaker. A simple type of High pass filter with a high-frequency volume control is adequate for average type applications. The response is from 1000 to 15,000 cycles at a power of 25 watts above 1000 cycles. The impedance is from 12 to 15 ohms and the dispersion angle 50° x 100°. It measures 6¾″ wide, 3½″ high, 8″ deep.

Model FN-1 high pass filter or its electrical equivalent, see Fig. 15-43, must be used to prevent the low-frequencies from actuating the tweeter.

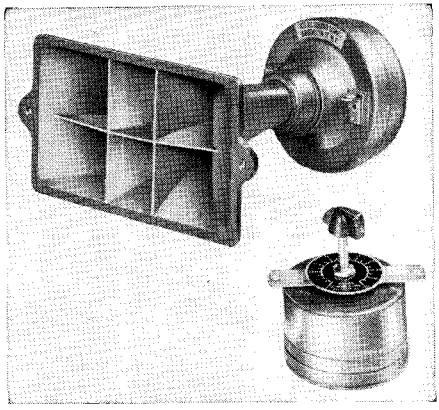

Fig. 15-43. Atlas Multi-cellular tweeter with high-frequency volume control. (Courtesy Atlas Sound)

Conclusion

The ultimate test of loudspeaker performance, requires that it be listened to and the subjective effects which it provides in the listener must be evaluated by people. What is desired in a loudspeaker of highest quality is a "transport to the original" in the production of the same sensations which would be experienced if the listener were actually at the original performance and complete freedom from any and all effects which mar the illusion of reality.

Loudspeakers (reproducers) designed especially for public address applications are discussed in the following chapters. It is important that the user possess a loudspeaker that is designed for a specific use. The requirements set forth in this chapter may serve as a guide in that respect.

CHAPTER 16

Dividing Networks and Filters

Design data covering series and parallel connected filter type networks and constant resistance networks for use with audio amplifiers.

Introduction

● In multiple channel systems the characteristics of the dividing network are as important as any other link in the chain of units. Simple arrangements use the inductance of the low frequency voice coil as well as the large mass of a relatively heavy cone as the low pass filter, and the high frequency section is fed with a series capacitance. More complex arrangements include inductance/capacitance networks for both sections. The characteristics may vary from a very slow roll-off with a great deal of overlap to cut-offs as sharp as 18 decibels per octave with very little overlap in commercially available units. A sharper cut-off than this is likely to introduce transient distortion and is found in practice to be unnecessary. The selection of crossover frequency is dictated by many considerations. If the crossover is low, then (a) the power handling requirement of the high frequency section is increased; (b) the length of the high frequency horn must be increased proportionately; and (c) very large capacitors are required for the high frequency section. If the cross-over is high, then (a) the low frequency speaker must handle a wider range with the probability of reaching into the region where the response is not smooth, and (b) if a low frequency horn is used, absorption in the walls may cause a droop in response ahead of cross-over.

In home installations where music only is to be reproduced, the division between speakers does not usually introduce a directional problem of consequence, nor is there difficulty from this source where the speaker units are designed with satisfactory coaxial orientation. However, where speech is to be satisfactorily reproduced from radio broadcast or other signal sources, it is undesirable to place the cross-over point within the central portion of the speech spectrum. This is one reason why some systems that sound excellent in reproducing music have undesirable characteristics in reproducing speech. The same kind of fuzziness and lack of presence may be observed under these conditions with sharply percussive sounds. This phenomenon is observed quite commonly but the source of trouble is often not recognized.

Where space is of relatively little consequence and a satisfactorily long high frequency horn may be used, it is probably desirable to place the cross-over point below 400 cycles per second. Another approach to this problem, of course, is to use a three-way system so that the mid-frequency range is handled by a single unit, eliminating the problem mentioned above in connection with speech and percussion reproduction and permitting optimum operation of both extreme high and low frequency units. This is not intended to indicate that very

high quality results cannot be obtained with cross-over points selected in the mid-frequency range for two-way systems, but to emphasize the fact that optimum conditions satisfying all of the requirements are very difficult to obtain.

With some types of cross-over networks, where feedback is taken from the secondary of the output transformer, a sufficiently large reactive load may be introduced to cause serious instability in the feedback circuits resulting in oscillation. While this can be eliminated by careful design of the feedback circuits, it almost certainly is an indication of other effects that are undesirable though not so apparent. Many commercial cross-over networks have tone control arrangements, usually for adjustment of the high frequency response. In some designs this is a roll-off control while in others it introduces a resistive loss that lowers the drive to the high frequency section. The roll-off type of control often involves networks that present an undesirable type of load for the amplifier. The stepped type of control may be desirable in some installations, but it is important that the user realize the characteristics of this system. A tone control in an amplifier that simply lifted or lowered an entire section of the spectrum would be considered entirely unsatisfactory. Such a control puts a distinct step in the response curve. Where the control is used to compensate for differences in efficiency between the high and low frequency sections of a system, it may be of real advantage but it should not be considered or used as a conventional tone control.

The efficiency of loudspeaker systems is a consideration of greater importance than is always recognized. It is all too common a concept that electrical power is cheap and that for this reason the efficiency of a loudspeaker system is not of first order importance. Electrical power within distortion limits satisfactory for high quality reproduction is by no means so inexpensive that it is of no importance. It is also true that the characteristics of power amplifiers are such that power output is increased in fairly substantial steps, and in-between ratings are not practical. Thus, 10 watts, 15 watts, 30 watts, etc., are relatively common ratings. If 15 watts is not quite enough to allow adequate reserve power for peak passages, it generally means going to 30 watts. Note that increasing the electrical drive to a single speaker from fifteen to thirty watts amounts to only approximately 3 decibels. Under normal listening conditions this will be observed as only a small increase in loudness. Usually it will be found that two fifteen watt amplifiers driving separate loudspeakers will result in greater efficiency and a larger increase in apparent loudness. With this in mind it becomes important that a dividing network introduce a minimum of loss. The insertion loss of practical systems may be kept to one decibel without great difficulty, and it is well worthwhile to reduce it to the practical limit of half a decibel in most systems. One decibel sounds deceptively small, but when it is translated into actual watts it will be noted that it makes a large difference in the power required from the amplifier.

Dividing Networks

Many audio systems make use of separate high-frequency and low-frequency loudspeakers. In order to obtain maximum efficiency from this dual reproducing arrangement, *dividing networks* are connected between the amplifier output transformer and the voice coils of the tweeter (high-frequency speaker) and woofer (low-frequency speaker). See Fig. 16-1. These networks separate the frequency components in

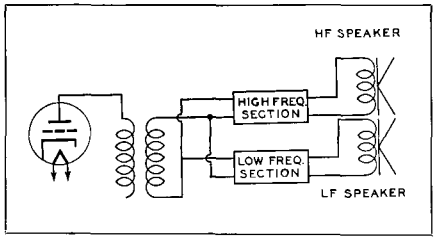

Fig. 16-1. Method for inserting dividing network between secondary of amplifier output transformer and loudspeaker voice coils.

the amplifier output voltage into two bands, so that only frequencies above a certain *crossover* frequency are transmitted to the tweeter, and only those below this crossover frequency are transmitted to the woofer. Each speaker thus operates only at those frequencies at which it is most efficient and faithful.

The crossover frequency may be selected at will, but most commercially available dividing networks operate at crossover frequencies of 400 to 2000 cycles. The basic facts concerning practical dividing networks may be summed up in the following brief comments:

(1) Each such network comprises a low-pass and high-pass filter with their input circuits connected either in series or in parallel. The output circuit of the high-pass filter section feeds the tweeter; that of the low-pass filter, the woofer.

(2) At the crossover frequency, the high and low-frequency power outputs are equal.

(3) With respect to the attenuation at the crossover frequency, the dividing network should provide 12 db minimum attenuation one octave from the crossover frequency.

(4) The *constant-resistance* type of dividing network is a specific form which, when terminated in the proper resistance load, will offer a constant input resistance over a frequency band. The constant-resistance type network is convenient in some instances, since each of its capacitive components are identical in value, as are each of its inductive components.

Circuit diagrams of dividing networks are given in Figs. 16-2 and 16-3, together with the formulas for obtaining the values of their capacitive and inductive elements. The arrangements shown in Fig. 16-2 are the conventional series and parallel-connected filter-type networks. Those given in Fig. 16-3 are constant-resistance networks. In the latter groups, two of the circuits (A and C) will provide only about 6 db attenuation at 1 octave from the crossover frequency, and should be employed only in those specific cases where this low attenuation may be tolerated.

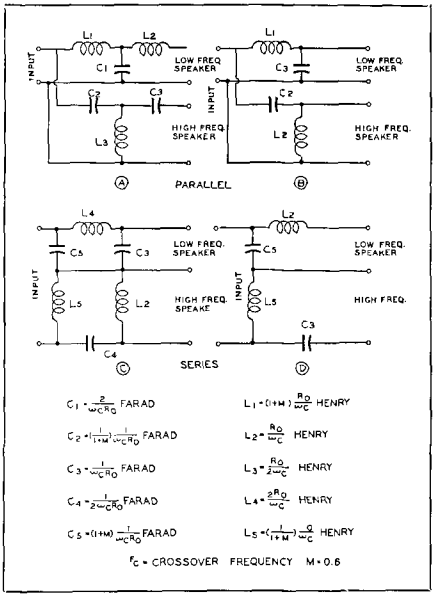

Fig. 16-2. Conventional series and parallel connected filter type networks along with the formulas for obtaining LC component values.

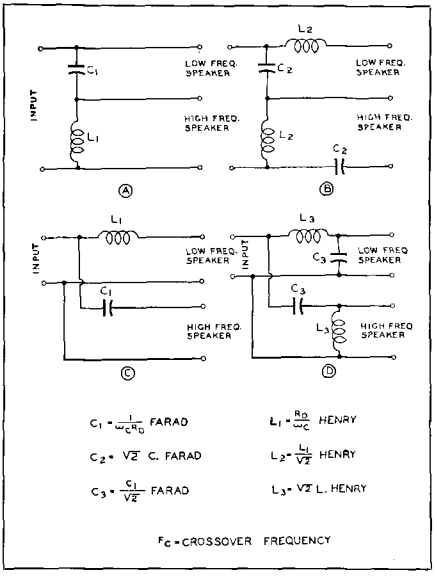

Fig. 16-3. Four types of constant-resistance networks and associated formulas for computing values. See note in text on A and B.

Fc=	400	500	600	700	800	900	1000	1100	1200	1300	1400	1500	1600	1700	1800	1900	2000
C1	79.62	63.70	53.08	45.48	39.80	35.38	31.85	28.95	26.54	24.49	22.74	21.23	19.90	18.75	17.69	16.76	16.59
C2	24.88	19.91	16.59	14.21	12.44	11.06	9.95	9.04	8.78	7.65	7.10	6.68	6.22	5.86	5.53	5.23	4.97
C3	39.81	31.85	26.54	22.74	19.90	17.69	15.91	14.47	13.27	12.24	11.37	10.61	9.95	9.37	8.84	8.38	7.95
C4	19.90	15.92	13.27	11.37	9.95	8.84	7.96	7.23	6.63	6.12	5.68	5.30	4.97	4.68	4.42	4.19	3.98
C5	63.69	50.96	42.46	36.38	31.84	28.30	25.46	23.16	21.23	19.59	18.19	16.98	15.95	15.00	14.15	13.41	12.73
L1	6.37	5.10	4.25	3.64	3.18	2.83	2.55	2.31	2.12	1.96	1.82	1.70	1.59	1.50	1.41	1.34	1.27
L2	3.98	3.18	2.65	2.27	1.99	1.77	1.59	1.44	1.32	1.22	1.13	1.06	.995	.93	.88	.84	.79
L3	1.99	1.59	1.33	1.14	.995	.884	.796	.725	.665	.61	.57	.530	.497	.468	.442	.419	.398
L4	7.96	6.37	5.31	4.55	3.98	3.54	3.18	2.89	2.65	2.45	2.27	2.12	1.99	1.87	1.77	1.62	1.59
L5	2.49	1.99	1.66	1.42	1.24	1.11	.995	.905	.830	.765	.710	.660	.620	.580	.550	.502	.497

C in μfds L in mh m= 0.6 Ro= 10 ohms F in cycles

Fig. 16-4. Conventional dividing networks. See Figure 16-2 for circuit.

Fc=	400	500	600	700	800	900	1000	1100	1200	1300	1400	1500	1600	1700	1800	1900	2000
C1	39.80	31.85	26.54	22.74	19.90	17.69	15.91	14.47	13.27	12.24	11.37	10.62	9.95	9.37	8.84	8.38	7.95
C2	56.29	45.03	37.53	32.15	28.14	25.01	22.50	20.46	18.76	17.31	16.07	15.01	14.07	13.25	12.50	11.84	11.25
C3	28.14	22.51	18.76	16.07	14.07	12.50	11.25	10.23	9.38	8.65	8.03	7.50	7.03	6.67	6.25	5.92	5.62
L1	3.98	3.18	2.65	2.27	1.99	1.77	1.59	1.44	1.32	1.22	1.13	1.06	.79	.93	.88	.84	.79
L2	2.81	2.25	1.87	1.60	1.41	1.25	1.12	1.02	.93	.86	.80	.75	.56	.66	.62	.59	.56
L3	5.62	4.50	3.74	3.20	2.82	2.50	2.24	2.04	1.87	1.73	1.60	1.50	1.12	1.32	1.25	1.19	1.12

C in μfds L in mh. Ro= 10 ohms f in cycles

Fig. 16-5. Constant-resistance dividing networks. See Figure 16-3 for circuit.

Position of Network in Amplifier

The band-separating action of the dividing network might be obtained at several points in a conventional audio amplifier. In standard practice, however, the dividing network is almost always connected between the secondary winding of the amplifier output transformer and the loudspeaker voice coils, as shown in Fig. 16-1. In this way, one output amplifier stage is made to serve both loudspeakers.

Each network section must carry the full power delivered to the loudspeaker which it supplies. Network components accordingly must be capable of handling these power levels safely. The condensers used may be low voltage types however, as the voltage across them never exceeds 25 volts. Electrolytic condensers should never be used. At the same time, the resistance of the inductors must be of the lowest possible value, consistent with required inductance, in order to minimize insertion losses.

The impedances out of, and into which the practical dividing network operates are identical with the rated voice coil impedance of the speakers. Thus the *Ro* value that appears in the formulas.

Use of Tables

All component values for dividing networks may be calculated by means of the formulas given in Figs. 16-2 and 16-3. However Figs. 16-4 and 16-5, which

list these values calculated with sufficient accuracy for critical applications, are included herein for the reader's convenience.

Figs. 16-4 and 16-5 list all condenser and inductor values required, respectively, in conventional and constant-resistance type dividing networks. These tables are based upon an Ro value of 10 ohms and an m of 0.6. All capacitance values are given in microfarads and all inductance values in millihenries, for common crossover frequencies every 100 cycles from 400 to 2000 cycles.

When working with systems in which $Ro = 10$, all C and L values may be read in the corresponding frequency column directly from Fig. 16-4 for conventional networks, or from Fig. 16-5 for the constant-resistance type. For Ro values other than 10, the chart values may be operated upon to yield values required for the new impedance, thus, for a value (Rx) other than Ro (10 ohms) multiply all L values corresponding to the desired crossover frequency by Rx/Ro, and divide all C values by this same factor.

As an illustration of the use of the Rx/Ro factor, consider the following example: A conventional dividing network is required to work between 16 ohms at a crossover frequency of 1000 cycles. At 16 ohms, $Rx/Ro = 16/10 = 1.6$. All L values in the 1000 cycle column of Fig. 16-4 must be multiplied by 1.6, and all C values in the same column must be divided by 1.6.

Design of Audio Networks

The use of electrical networks to give desired amplitude-frequency characteristics has become an extremely important part of electronic engineering. Since in general the uncorrected frequency-response characteristic of any given electrical circuit may not necessarily be the one which best gives the desired result, the method of frequency-response correction is seen to be of considerable importance in the design and construction of such equipment.

For example, considerable expense and difficulty may often be avoided in the design and construction of amplifiers by compensating for deficiencies in the over-all frequency response by means of an attenuation equalizer, rather than by attempting to make the amplifier perfect within itself. In a complete communications channel any component can be compensated for, and any desired frequency response may be attained by the

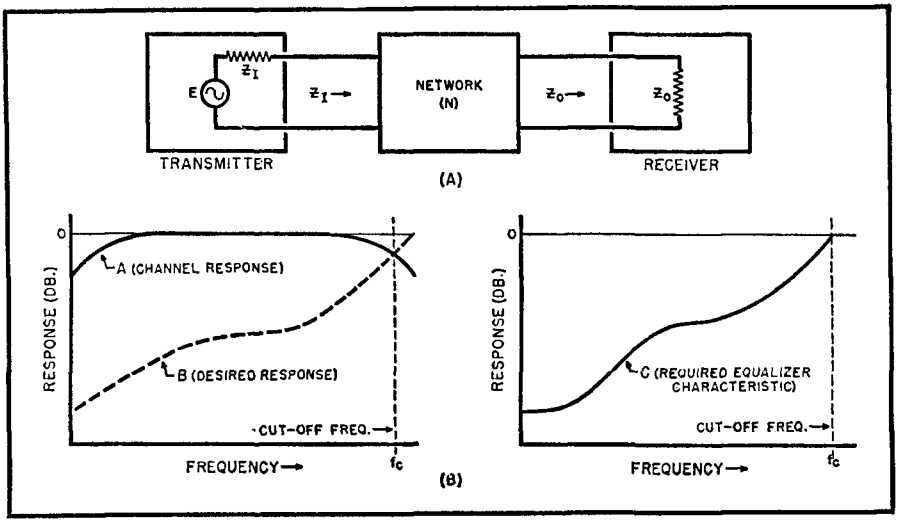

Fig. 16-6. (A) Generalized communication circuit including a 4-terminal network. (B) Frequency response curves showing required equalization to obtain desired response.

insertion of an equalizing network at some point in the channel. In transmission lines which are used to convey intelligence, the transmission losses are generally greater at higher frequencies, resulting in frequency distortion of the transmitted signal. To obtain faithful reproduction of the original signals at the receiving terminal, the transmission line is compensated by a correction network, generally at the receiving end, to make the resultant loss invariable with frequency over the required band. In the reproduction of sound, many different effects can be obtained by changing the amplitude relations of the different frequency components of the desired signal.

In addition to the extreme importance of network theory in audio-frequency work, it also finds considerable application at higher frequencies and particularly in ultra-high-frequency work at the present time. The same basic principles apply at uhf as at audio frequencies, and in addition, devices which depend in part on currents of uhf may have in them elements or sections which operate at much lower frequencies, as well as with direct current. Thus, much of audio-frequency network theory is of interest to many others besides audio-frequency engineers and technicians.

For some time there has been a need for a complete and concise practical treatment of network design from the viewpoint of the practical engineer who may not be a specialist in network theory, but is called upon to design networks for specific purposes. Some topics of network theory can only be found in theoretical books on the subject, while many others are widely scattered in the periodical literature, and still others have not been written about at all and are gained only by experience. This text will attempt to present, in a concise and unified form, a summary of the principles and design procedures of audio-frequency networks for the practical engineer and technician, with the actual design procedure reduced to a set of charts and curves wherever possible.

The general type of network which will give a desired frequency-response characteristic is the four-terminal network having two input terminals for connection to a transmission system to receive power, and two output terminals for connection to a load to deliver power. Such a network consists of an orderly array of two-terminal electrical elements whose arrangement is such as to produce a specified insertion-loss characteristic when connected between the proper terminal impedances. The two-terminal elements are made up of inductance, capacitance, and resistance in various combinations according to the function which the network is to perform. In wave filters, whose function is to let pass the desired frequency bands and to highly attenuate neighboring undesired frequency bands, and which therefore have frequency characteristics which vary rapidly near the cut-off frequency with no attentuation loss within the transmission band, the circuit elements are purely reactive. In frequency-response correction equalizers, whose frequency characteristics are desired to vary in a gradual manner with frequency, resistance as well as reactance elements are used in order to give a gradual variation of attenuation loss within the transmission band.

An important set of relations which arise in network theory are the equivalent and the inverse relationships between various two-terminal impedances. Two networks which have identical impedances at their terminals for any frequency (even though the circuit arrangements and element values may be different) are said to be equivalent. Two networks, Z_1 and Z_2, are said to be inverse with respect to an impedance Z_0 when they satisfy the relation that:

$$Z_1 Z_2 = Z_0^2.$$

The specific impedance relationships which must be satisfied by two networks in order for them to be equivalent or inverse are summaried for convenient reference in Table 1.

The basic circuit setup for use of any type of four-terminal network is given in Fig. 16-6A. This schematic represents the insertion of the network at any point

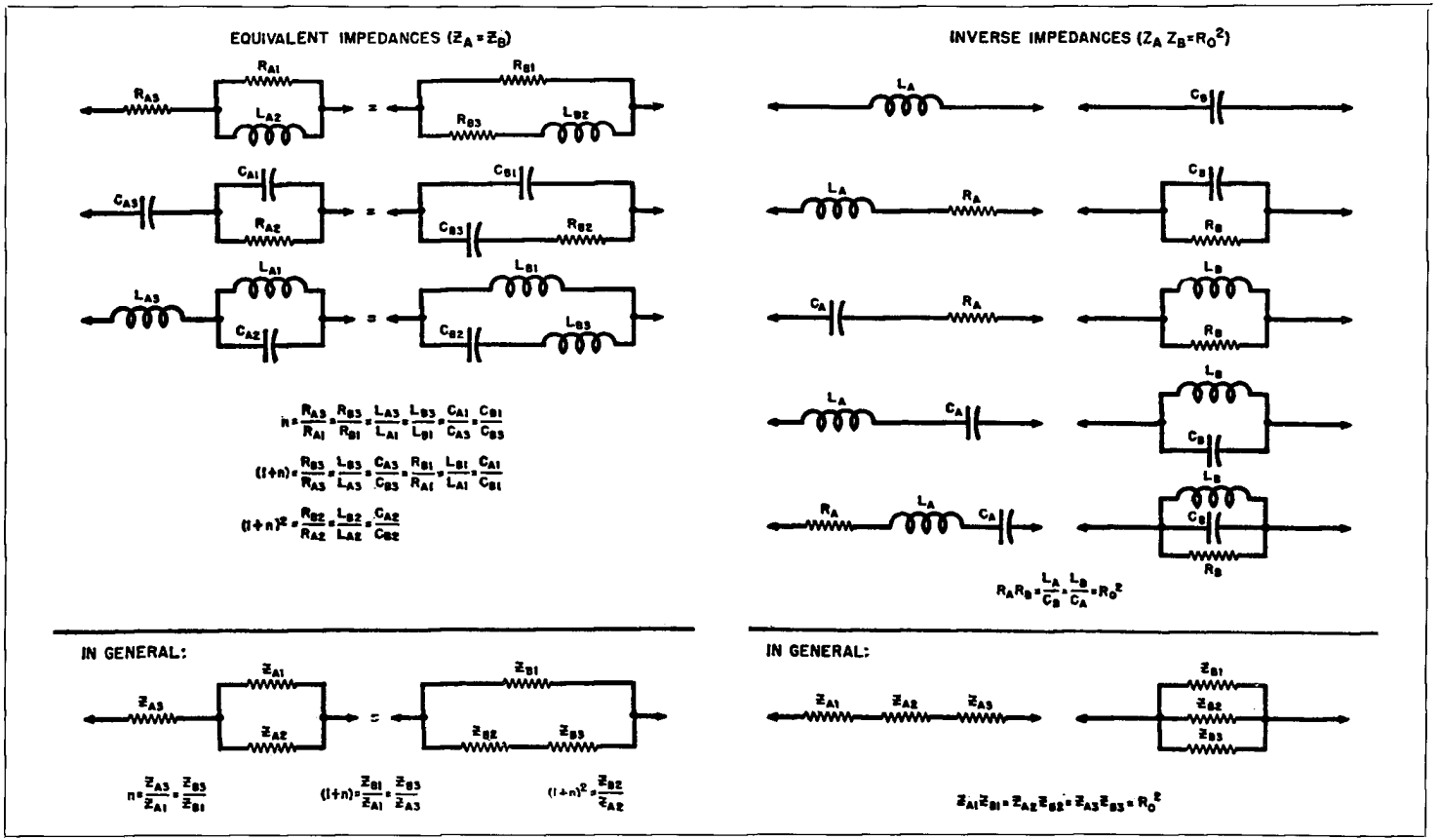

Table 1. Equivalent and inverse impedances, together with the general mathematical expressions for each.

in a communications channel, where the network represented by N operates between a transmitter of impedance Z_1 and a receiver of impedance Z_0. (Usually in audio network applications, $Z_1 = Z_0 = R_0$.) Then, if the circuit, taken alone without the network N, has the frequency response characteristic A in Fig. 16-6B, and the desired response curve is B, the response of the frequency-corrective network will be the difference between these two curves as represented by C.

In the use of four-terminal networks as illustrated in Fig. 16-6, it must always be kept clearly in mind that all networks consisting only of resistance, capacity and inductance with no sources of voltage (i.e., *passive* networks), can only *attenuate* frequencies, and cannot increase response at any frequency. Therefore, if it is desired to accentuate some particular frequency, this can be done only by attenuating all other frequencies; and the one frequency has therefore been accentuated at the expense of the over-all signal level.

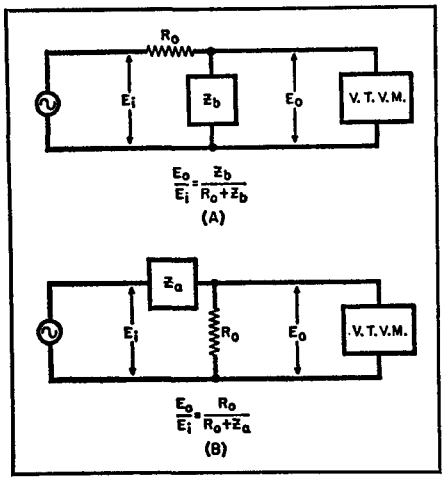

Fig. 16-7. Basic set-ups for experimental method of equalizer design.

Attenuating Equalizers

An attenuation equalizer is a four-terminal network whose response varies more or less gradually in some desired manner over a given frequency range. Therefore, if a signal containing components of different frequencies is passed through the network, the relative amplitudes of the different components will have been altered in the desired manner when the signal is delivered to the load circuit. For example, in the response curve shown for the channel in Fig. 16-6B, the response drops off at the higher frequencies. Since in this case it is desired to correct the response to the cut-off frequency, the equalizer which is inserted in the circuit contains an attenuation characteristic inverse to that of the network to be corrected. The result obtained by adding the two response curves is the desired response.

In the application which has just been described, the desired result was a certain response curve within the limits of the frequency band prescribed by the upper and lower cut-off frequencies. This is only one of the many different types of response curves which are of interest in audio-frequency work, and which may be attained by the use of attenuation equalizers. In some applications it is desired to have a response characteristic which rises toward the higher frequencies (for instance, in disc recording and FM broadcasting) to obtain a better signal-to-noise ratio. In many cases it is necessary to decrease or increase the response at some particular frequency (or narrow band of frequencies) in order to compensate for a peak or lack or response at that frequency. Almost all of the frequency response characteristics which are required in practical audio engineering can readily be attained by means of properly designed attenuation equalizers.

A great amount of work has been and is being done on the design of frequency-corrective networks and attenuation equalizers, and many different types of networks of varying complexity have been developed to produce the various results. The types of circuits which are of greatest importance and of greatest interest in audio-frequency work are described below:

(a) *Simple RC frequency-corrective*

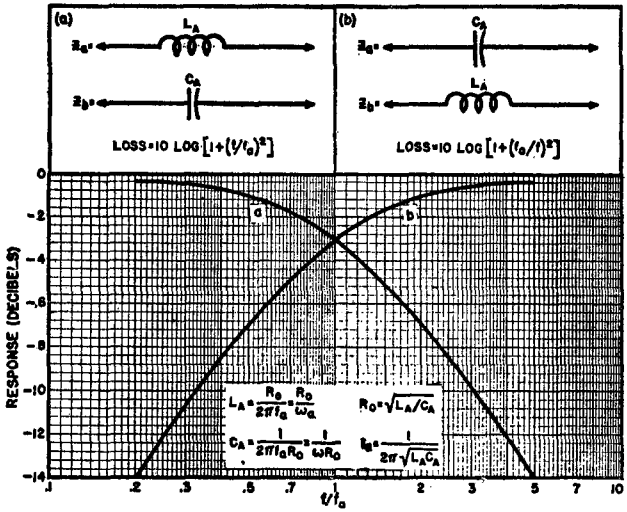
(a)
(b)
LOSS = 10 LOG [1 + (f/f_a)²]
LOSS = 10 LOG [1 + (f_a/f)²]
RESPONSE (DECIBELS)
f/f_a
(A)

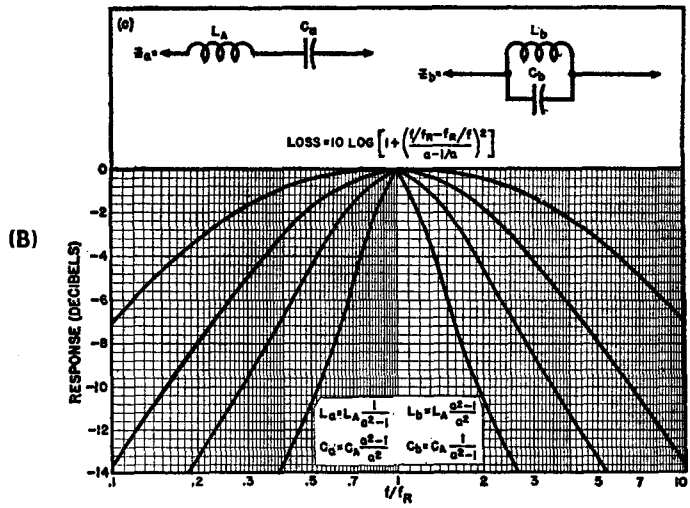
(c)
LOSS = 10 LOG [1 + ((f/f_R − f_R/f)/(a − 1/a))²]
RESPONSE (DECIBELS)
f/f_R
(B)

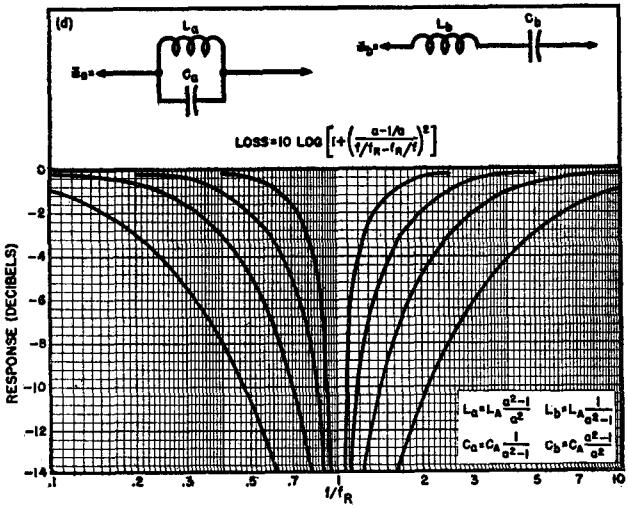
(d)
LOSS = 10 LOG [1 + ((a − 1/a)/(f/f_R − f_R/f))²]
RESPONSE (DECIBELS)
f/f_R
(C)

Notes for all types:

f_R = resonant freq. of Z_a and Z_b arms

f_a = freq. of 3 db insertion loss.

f_b = freq. where loss is ½ max. in db

f = any frequency

$b = f_R/f_b$, defined as > 1

R_o = equalizer resistance

Pad loss = max. loss = 20 $\log_{10} K$

L = inductance in henrys

C = capacity in farads

Notes for types (e), (f), (g), (h):

$R_o = \sqrt{L_B/C_B}$, $R_a = R_o\,(K - 1)$

$R_b = R_o/(K - 1)$, $L_B = R_o/2\pi f_B = R_o/\omega_B$

$C_b = 1/2\pi f_B R_o = 1/\omega_B R_o$

$f_B = 1/2\pi\sqrt{L_B C_B}$

(D) Top

(E) Center

(F) Bottom

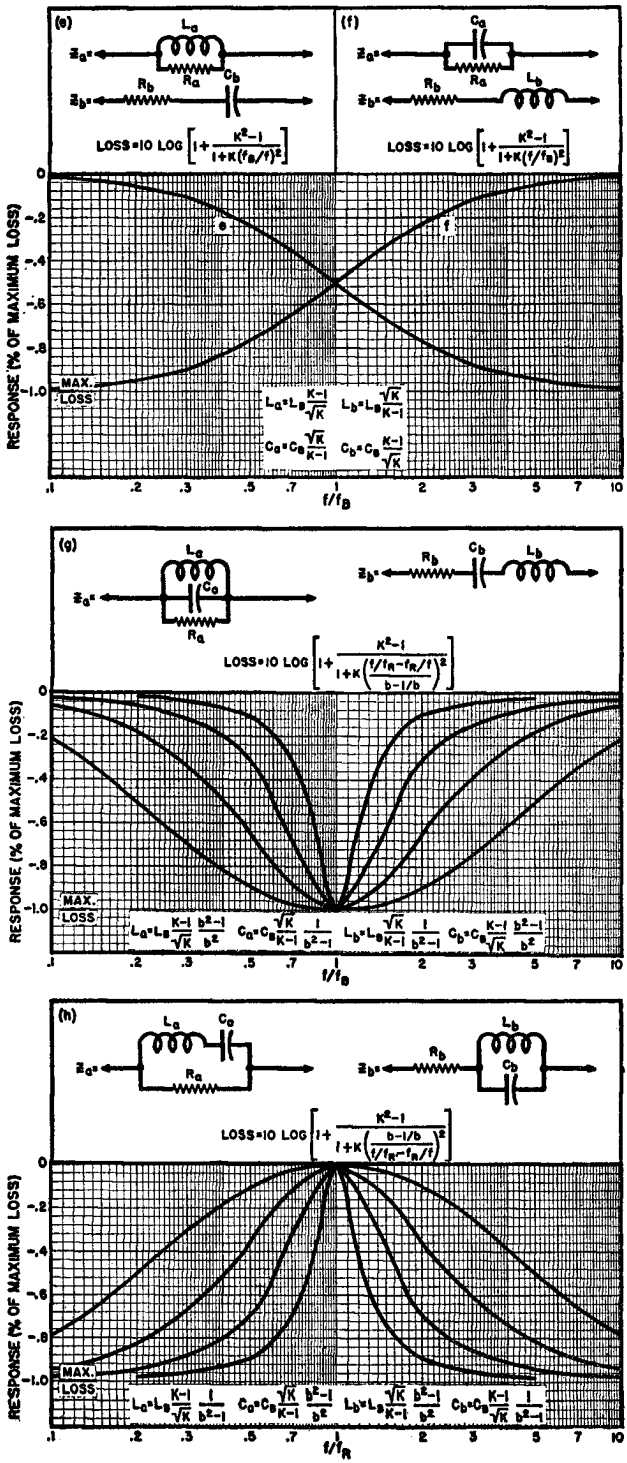

Table 2. Formulas and curves for equalizer design using several different networks for the Z_a and Z_b arms.

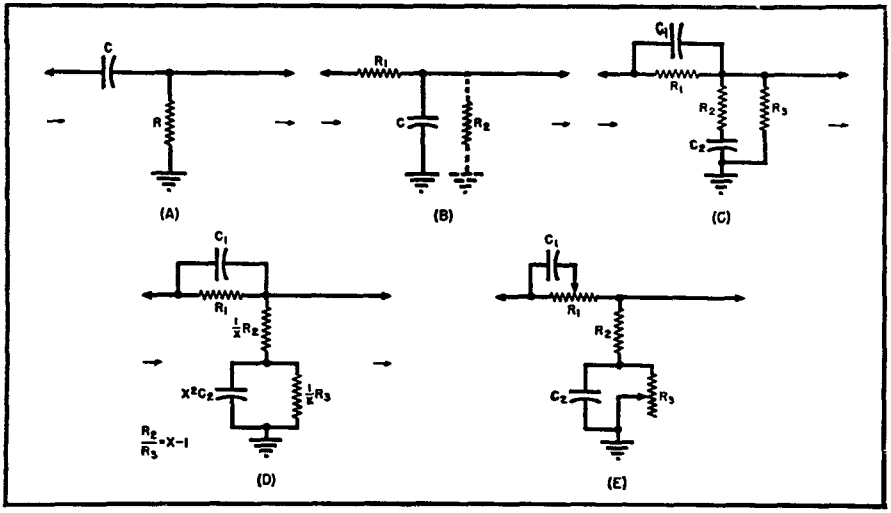

Fig. 16-8. Basic RC networks for frequency-response correction. (A) Low frequency attenuation. (B) High frequency attenuation. (C) and (D). Low and high frequency lift. (E) Variable low and high frequency lift.

circuits. Many types of frequency correction can be obtained by simple circuits containing only resistance and capacity elements. The basic circuits for frequency-response correction by means of *RC* networks are shown in Fig. 16-8. All the basic circuits are simple ladder networks. For low-frequency attenuation the circuits consist of a condenser in the series arm with a resistance as the shunt arm; while for high-frequency attenuation, the circuit is a resistance in the series arm, with a condenser (in parallel with a resistance) as the shunt arm. For high and low-frequency lift, the network consists of a resistance and capacity in parallel as the series arm, and two resistors and a capacity to form the shunt arm. The input and output impedances vary with frequency, and these networks are most practical for use in high-impedance circuits such as interstage coupling and feedback in resistance-capacitance coupled amplifiers.

The equations for the frequency response characteristics of these circuits, together with a chart and a set of curves by which practical *RC* corrective networks may be designed for specified characteristics, are given in Table 3.

Low-frequency and high-frequency attenuations are obtained from the circuits in Fig. 16-8A and B in the following manner: In network A, the output is determined by the voltage divider consisting of the series capacity and the shunt resistance. At high frequencies, the impedance of the condenser is small compared to the resistance, and essentially the entire input voltage is delivered to the load; below a certain crossover frequency determined by the relative values of the resistance and capacity, the impedance of the condenser becomes large compared to the resistance, and as the frequency becomes lower the voltage delivered to the output becomes progressively less as the impedance of the condenser increases. In network B the output is determined by the voltage divider consisting of the series resistance and the parallel resistance and capacity in shunt. At low frequencies the condenser has essentially infinite impedance, and the output is determined by the resistances; above some crossover frequency, the impedance of the condenser begins to short-circuit the shunt resistance, and as the frequency increases the output voltage becomes

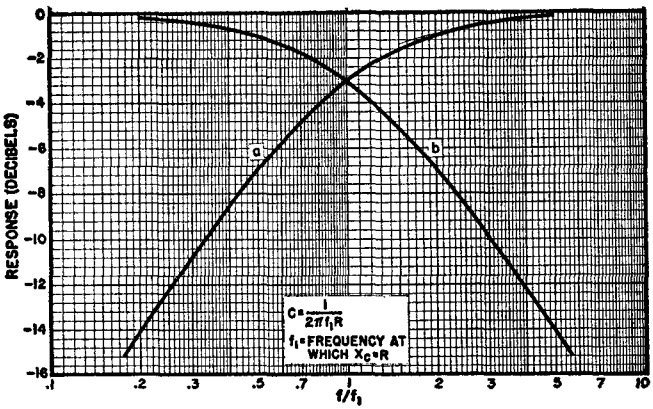

A

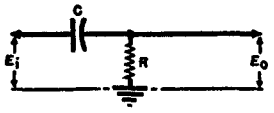

LOSS=10 LOG $[1+(f_1/f)^2]$

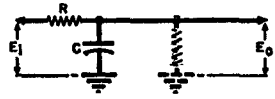

LOSS=10 LOG $[1+(f/f_1)^2]$

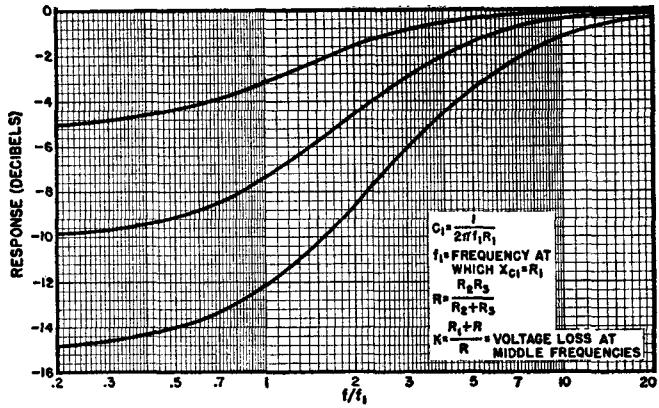

B

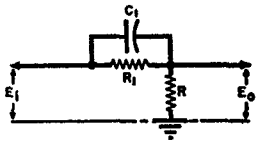

LOSS=10 LOG $\left[1+\frac{K^2-1}{1+(f/f_1)^2}\right]$

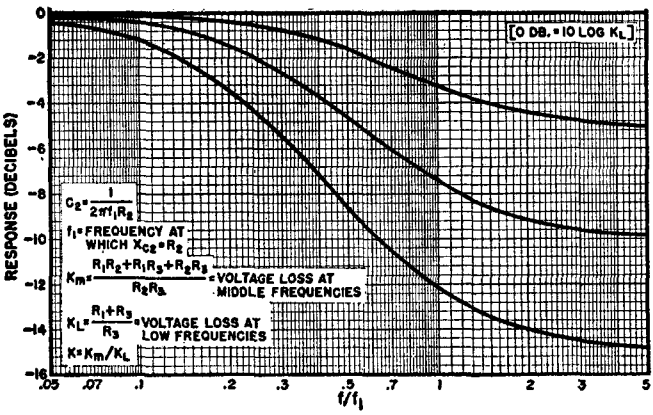

C

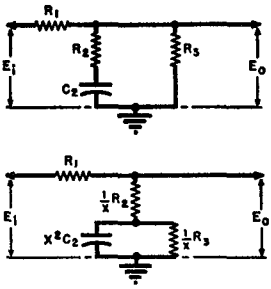

LOSS=10 LOG $\left[1+\frac{K^2-1}{1+(f_1/f)^2}\right]$

$+ 10 \text{ LOG } K_L$

Table 3. The design of RC equalizers.

progressively less as the impedance of the condenser decreases.

Low-frequency and high-frequency lift are obtained from the circuits in Fig. 16-8C and D in the following manner: At the middle frequencies the circuit is essentially a resistive voltage divider consisting of R_1 in series with R (where R is the combined resistance in the shunt arm when the condenser is short-circuited), since at these frequencies condenser C_1 is effectively an infinite impedance and C_2 a short circuit. Thus, the insertion loss of the network is determined by the output of this voltage divider, and this also determines the maximum amount of frequency correction since the maximum voltage output cannot be more than the input voltage.

At higher frequencies the reactance of condenser C_1 becomes smaller until at sufficiently high frequencies resistor R_1 is effectively short-circuited and the entire input voltage appears across the output terminals. At low frequencies, the series arm R_1 remains constant, but the reactance of C_2 in the shunt arm of the network increases as the frequency decreases. Therefore at low frequencies the shunt arm of the voltage divider becomes relatively a higher impedance compared to R_1, and a greater proportion of the input voltage appears across the output terminals. The maximum amount of low-frequency lift is determined by the relative values of resistors R_1 and R_3.

In this circuit, the specific amounts of high- and low-frequency equalization are determined by the relative values of resistors R_1, R_2 and R_3. The frequencies at which the lift occurs are determined by the value of C_1 relative to R_1, and C_2 relative to R_2. The design curves in Table 3 are therefore plotted in terms of frequency ratio (i.e., relative to f_1 at which X_{c1} is equal to R_1, and to f_2 at which X_{c2} is equal to R_2), and in decibels of equalization. The formulae by which the values of resistance and capacity are determined from the curves are given in the table. When they are drawn in this manner the curves and the table are thus universal in application to the design of equalizers of this type.

In designing an equalizer in a practical problem, the desired curve is compared with the curves in Table 3, and the most suitable one is selected or interpolated from the given curves. This comparison gives the values of high- and low-frequency equalization, the middle-frequency insertion loss, and the frequencies f_1 and f_2. From these, values of resistance and capacity are found by means of the formulae.

One additional piece of information is required before the high- or low-frequency lift equalizer can be designed; one of the resistors R_2 or R_3 must be selected as the reference impedance for the network. These values are generally dictated by the requirements of the circuit in which the network is to be used. The network has its minimum input impedance (equal to R) at high frequencies and its highest output impedance (equal to R_3 at low frequencies. In most cases at least one of these values is determined by the circuit in which the network is used, and this furnishes complete data for the design of the RC equalizer.

The basic circuit for high- and low-frequency lift has been given in two different forms in Fig. 16-8 and in Table 3. Usually the circuit in the form C is more convenient to use when the amount of low-frequency equalization required is constant, as in interstage coupling in an amplifier to correct for deficiencies elsewhere in the system; while form D of the circuit is more convenient to use when a variable amount of equalization is required, as in the tone control of a radio receiver or a phonograph amplifier. An example of how this network may be used as a variable equalizer is given in Fig. 16-8E. This variable equalizer has the feature that the high- and low-frequency equalization may be varied independently and the middle-frequency level remains constant regardless of the amount of equalization. The basic circuit which has been described may also be used for either high or low-frequency correction alone. For low-frequency lift, condenser C_1 is omitted. For high-frequency lift, condenser C_2 is re-

moved and the two resistors R_2 and R_3 are replaced by a single resistor R having the appropriate value.

(b) *Constant-impedance and conventional L,C,R equalizers.* Much greater variety of frequency response and flexibility of design are offered by the constant-impedance and other types of conventional equalizers containing inductive as well as resistance and capacity elements. In the equalizer circuits which fall into this category, the transmission characteristics in general are made to depend upon a series impedance Z_a and a shunt impedance Z_b. These two impedances must satisfy the condition that they are inverse to each other with respect to the line impedance Z_o; that is $Z_a Z_b = Z_o$.

Equalizers of this type fall into seven different circuit arrangements which have been found most satisfactory for general use. These various circuit arrangements are summarized briefly in Table 4. Because Z_o is almost always resistive, it is assumed that these equalizers are to be used in a line whose impedance is resistive and has a value equal to R_o (so that $Z_a Z_b = R_o^2$). The first two circuit arrangements, the series impedance and the shunt impedance, do not present constant impedance to either the input circuit or to the load. The full series and the full shunt present constant impedance R_o to the input circuit; while the bridged-T, the T and the lattice arrangements are symmetrical and present constant impedance R_o both the input circuit and the load. (This is indicated on the chart by the arrow and the symbol R_o to indicate when the circuit presents a constant impedance R_o). For the same impedances Z_a and Z_b, when driven from a source of impedance R_o and terminated in a resistive load R_o, the frequency response characteristics of all seven types of equalizer circuits shown in this chart will be identical.

The frequency characteristic of the equalizer may be determined from the fundamental equation for the insertion loss:

$$I.L. = 20 \log \frac{R_o + Z_a}{R_o} = 20 \log \frac{R_o + Z_b}{Z_b} \quad (1)$$

Thus, the manner in which the response varies over the frequency range depends entirely upon the manner in which Z_a and Z_b vary with respect to R_o, and can be calculated from either the series or the shunt impedance arm. From this insertion loss equation, it can be seen that the frequency-attenuation curve of this class of equalizer depends only upon the impedance configuration of the series and shunt arms, and since they are inverse to one another, only one of them need be known and the entire response of the equalizer is specified.

The number of different possible two-terminal impedances which might be used as the series and shunt arms in an equalizer is almost unlimited, but in actual practice it has been found that most of the desired results can be accomplished by one or more of a few simple impedances. The most useful of these are:

(a) Z_a and inductance and Z_b a capacity.

(b) Z_a a capacity and Z_b an inductance.

(c) Z_a a series-resonant circuit and Z_b parallel-resonant

(d) Z_a parallel-resonant and Z_b series-resonant

(e) Z_a an inductance in parallel with a resistance and Z_b a capacity in series with a resistance

(f) Z_a a capacity in parallel with a resistance and Z_b an inductance in series with a resistance

(g) Z_a a parallel-resonant circuit in parallel with a resistance and Z_b a series-resonant circuit in series with a resistance

(h) Z_a a series-resonant circuit in parallel with a resistance and Z_b a parallel-resonant cricuit in series with a resistance.

The different frequency responses obtained when these various impedances are used are shown in Table 2. The equations for the curves, giving the exact insertion loss in decibels for any frequency (also included in this chart) are

obtained by substituting the impedance of Z_a or Z_b into the general insertion loss equation given above.

As a practical aid in the engineering design of attenuation equalizers, the response of the various types of equalizers are accurately plotted in the six sets of curves in Table 2. The curves have been plotted on a universal scale so that they can be used for the general design of filters having various frequency-response characteristics to meet the requirements of particular engineering problems. The frequency scale in these curves is in terms of a ratio with respect to a reference frequency determined by the type of equalizer. (The manner in which these reference frequencies are chosen is indicated in the chart). In the first three sets of curves, representing the response of equalizer types (a), (b), (c) and (d) the vertical scale is an absolute scale in terms of insertion loss in decibels. In the remaining three sets of curves, representing the response of equalizer types (e), (f), (g) and (h) the vertical scale is a relative one in terms of percentage of maximum insertion loss (which will vary for different equalizer designs). These last three sets of curves are not strictly accurate in this form, but they give a very close approximation.

The formulae by means of which the electrical elements of an equalizer are determined from the various parameters of these curves are included in the chart in Table 2. The procedure in using these curves to design an equalizer to have a desired frequency response is to find the curve in the chart which best matches the required response, taking proper account of the relative frequency and insertion loss scales, then to calculate the values of the elements by means of the formulae in the table.

It may be noted that the total amount of equalization is determined by the values of the two resistors R_a and R_b. This affords a convenient method of designing equalizers for variable amounts of equalization, by varying the resistance values (either by means of a multipole switch, or by means of commercially available variable attenuators) while maintaining the relationship $R_aR_b = R_0^2$.

The fundamental equalizer insertion loss equation (1) indicates a convenient experimental method of equalizer design, in addition to the method of design by means of the curves given in Table 2. The basic principles of this method may be understood from the schematic block diagrams in Fig. 16-7. It can be seen in the circuits as set up in Fig. 16-7 that the output of the voltage dividers, consisting of R_o and of the impedance arms of the equalizer, satisfies the general equation for the insertion loss of the equalizer types under discussion. Thus, the equalizer may be designed completely by experimental measurement, by setting up either of the voltage divider networks shown in Fig. 16-7 and adjusting the impedance until the desired output frequency response curve is obtained. Once the one impedance arm has been determined, the other may be found by simple calculation from the formula for inverse impedances, i.e., $Z_a Z_b = R_o^2$. This method is completely general, and applies to all types of impedance configurations for Z_a and Z_b, including those covered in Table 3.

(c) *Constant-B equalizers.* It may be seen from Table 2 that in equalizers of types (g) and (h) the curve has two parameters which may be varied to change both the shape and the maximum insertion loss. The maximum loss may

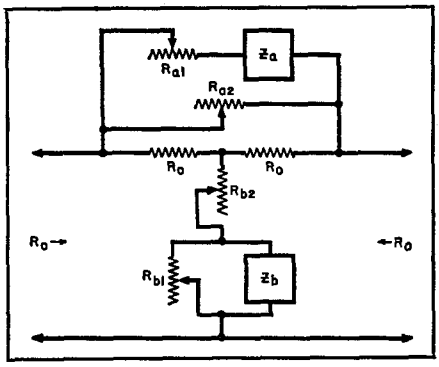

Fig. 16-9. Circuit diagram of bridged-T constant B variable equalizer.

easily be changed by changing the values of the resistors R_a and R_b in accordance with the formulae given in Table 2. However, when this is done the shape of the curve (represented by the parameter b) changes at the same time. In other words, the two parameters are not independent in these types of equalizers. In a great many variable equalizer applications this is extremely inconvenient. However, by choosing the impedances Z_a and Z_b in the proper manner, the shape of the curve may be made to remain constant as the amount of equalization is changed.

The circuit of this type of equalizer is shown in the schematic diagram in Fig. 16-9. The impedance configuration is seen to be similar to that of types (g) and (h), except for the addition of the two resistors R_{a1} and R_{b1}, whose function is to maintain the shape of the curve constant for different amounts of equalization. As in the conventional types of equalizers, the series and shunt arms are inverse to each other. This condition is represented by the equations: $R_{a1} R_{b1} = R_o^2$, $R_{a2} R_{b2} = R_{o2}$, $(jX_1)\ (jX_2) = R_o^2$. The various design equations covering the operation of the constant-B type of equalizer may be summarized in the following manner:

Since the series and shunt reactances are inverse, when either is zero the other is infinite. At frequencies for which $jX_1 = 0$ and $jX_2 = \infty$, the resistances R_{a1} and R_{a2} are in parallel, R_{b1} and R_{b2} are in series; at these frequencies the circuit has minimum insertion loss. At frequencies for which $jX_1 = \infty$ and $jX_2 = 0$, neither R_{a1} nor R_{b1} has any effect in the circuit; at these frequencies the circuit has maximum insertion loss. Inserting these conditions in Eqt. (1), the basic equation for the insertion loss of a constant-impedance equalizer, gives the quantitative result that:

$$\text{Max. loss} = 20 \log \left[1 + \frac{R_{a2}}{R_o} \right] \quad \ldots . \quad (2)$$

$$\text{Min. loss} = 20 \log \left[1 + \frac{R_p}{R_o} \right] \quad \ldots . \quad (3)$$

where R_p is the parallel resistance of R_{a1} and R_{a2}. The difference between maximum and minimum loss is the amount of equalization of the circuit.

Thus:

$$\text{Equalization} = \text{max. loss} - \text{min. loss}$$

$$= 20 \log \left[\frac{1 + R_{a2}/R_o}{1 + R_p/R_o} \right] \quad \ldots \ldots \quad (4)$$

In the design of a variable equalizer, the amount of equalization is, in general, varied in known steps from zero to some maximum amount at the top step of the control dial, therefore the equalization and the manner in which it is to be varied may be assumed to be known design information. For a definite amount of equalization, the shape of the curve (represented by the parameter b) may be varied by adjusting the maximum and minimum loss while keeping their difference constant. In constant-B equalizers, the object is to keep f_b constant for all steps of the equalizer. The condition for this to be true is that:

$$\sinh^2 \left[\frac{\text{Max. loss on any step}}{2 \times 8.68} \right] = \sinh \left[\frac{\text{Equalization on same step}}{2 \times 8.68} \right]$$

$$\times \sinh \left[\frac{\text{Max. equalization on top step}}{2 \times 8.68} \right] \quad \ldots . \quad (5)$$

Since the two factors on the right are known, the factor on the left may then be determined. In most cases Eqt. (5) can be simplified to avoid the use of hyperbolic functions. For equalizers having maximum losses not greater than 15 or 20 db, the hyperbolic angles in the equation are small, so that the sinh of the angle is approximately equal to the angle, Thus, as an approximation to Eqt. (5):

$$\left(\text{Max. loss on any step}\right)^2 = \left(\text{Equalization on same step}\right) \times$$

$$\left(\text{Max. equalization on top step}\right) \quad \ldots \ldots \quad (6)$$

Eqts. (2) to (6) give all the information necessary for the design of the resistance attenuator portion (i.e., R_{a1}, R_{a2}, R_{b1}, and R_{b2}) of the constant-B equalizer. The

procedure and the steps which should be followed in the design of such an equalizer from these equations may be summarized briefly in the following manner:

(1) Note that at the top step the equalization is maximum, and is seen from Eqt. (6) also to be equal to the maximum loss. Thus, on the top step the minimum loss is zero, $R_{a1} = 0$, and this is therefore a conventional equalizer on the top step. Therefore, determine first the reactance values and the top step resistances by designing the conventional equalizer for the top step.

(2) On all other steps, find the maximum loss by Eqt. (6) from the desired equalization and the equalization on the top step.

(3) From the maximum loss on any step, find R_{a2} from Eqt. (2)

(4) From the equalization and the maximum loss, find R_p by using Eqt. (3).

(5) Find R_{a1} from R_p and R_{a2}.

(6) Determine R_{b1} and R_{b2} from R_{a1} and R_{a2} by using the inverse relationships, i.e. $R_{a1}\ R_{b1} = R_o^2$ and $R_{a2}\ R_{b2} = R_o^2$.

From this information the equalizer is then completely specified.

Filter Networks

A wave filter is a four-terminal network which has negligible attenuation for a certain band of frequencies, and high attenuation for other frequencies. Since there are many applications where it is desirable or necessary to permit only certain bands of frequencies or to eliminate certain frequencies, wave filters are of considerable importance in electronic design.

The various frequency-selective attenuation characteristics of wave filters are classified into four different categories:

(1) low-pass filters, which pass all frequencies up to some finite cutoff frequency and attenuate all higher frequencies,

(2) high-pass filters, which transmit all frequencies above the cutoff frequency and attenuate all lower frequencies,

(3) band-pass filters, which transmit

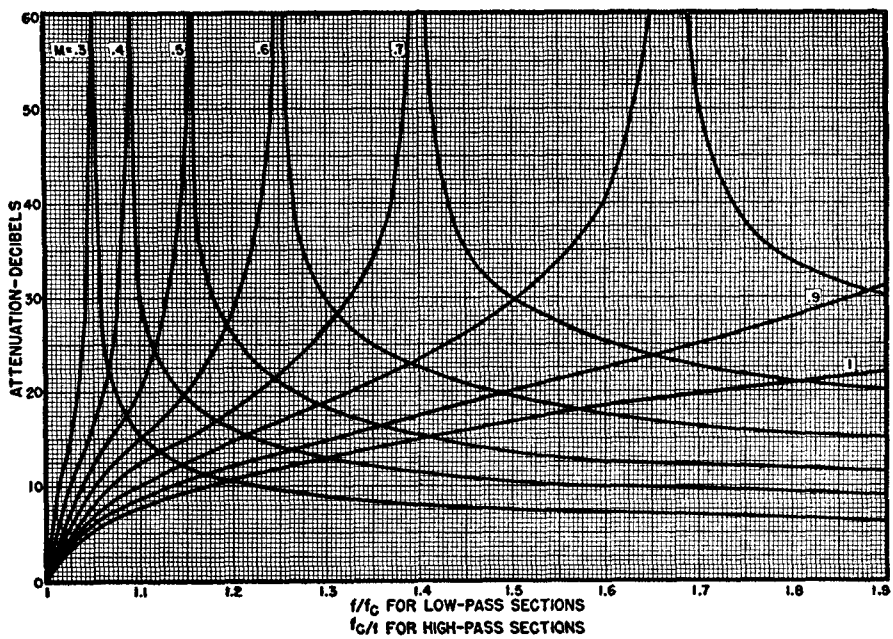

Fig. 16-10. Attenuation per section for low and high pass filters for various values of m.

a definite band of frequencies and attenuate all frequencies outside this band,

(4) band-elimination filters, which attenuate a definite band of frequencies and transmit all frequencies outside this band.

Since band-elimination filters are seldom used in practice, this section will be restricted to the use of the first three types of wave filters.

A wave filter is composed of series and shunt two-terminal impedances so chosen as to give the desired pass band and attenuation characteristics. Unlike attenuation equalizers, the two-terminal impedances in filters must be purely reactive in order that there be no appreciable attenuation within the pass band.

Most of the practical problems which require the use of wave filters can be solved by the use of ladder type filters composed of symmetrical T or π sections connected in tandem in sufficient numbers and types to secure the desired attenuation characteristic. The basic circuit configurations, impedance relations, and the relationships between the different types of ladder filter sections are given in Fig. 16-12. Filter sections are expressed in terms of the two inverse impedances Z_1 and Z_2, which may be any pair of inverse two-terminal reactive networks. The equations given in Fig. 16-12 show that the attenuation characteristics and image impedance of the two various sections depend upon the impedance ratio $Z_1/4Z_2$. The filter has negligible insertion loss for all frequencies that make this ratio lie between 0 and -1, while all frequencies outside this range are attenuated. For example, when Z_1 is an inductance and Z_2 a capacity, a low-pass filter is obtained. When Z_1 is a capacity and Z_2 an inductance, a high-pass filter results. When Z_1 consists of a series-resonant circuit of inductance and capacity in series, and Z_2 the corresponding inverse circuit band-pass filter sections are obtained. Thus, by assigning the proper circuit configurations and values to Z_1 and Z_2 the desired types of filter sections and pass-band characteristics can readily be obtained.

The simplest type of filter section is the constant-k filter, in which only Z_1 appears in the series arm, and Z_2 in the shunt arm. In the m-derived sections, Z_1 and Z_2 appear together in either the series or the shunt arm. The m-derived sections in general give a sharper cutoff and a more constant image-impedance in the pass band, while the constant-k section has a greater attenuation at frequencies far beyond cutoff. From the equations in Fig. 16-12 it can be seen that the constant-k section may be considered as an m-derived section in which $m = 1$. An important point which must be remembered in connection with the design of filters is that when sections are combined into a multi-section filter, they must always be combined on a matched-impedance basis as indicated in Fig. 16-12.

The various types of filter sections, together with the information and formulae necessary for the design of band-pass, low-pass, and high-pass filters are summarized in convenient form for practical filter design in Tables 1, 2, and 3. These tables give the circuit configurations of the various filter sections, together with their attenuation characteristics, image impedance, and formulae for calculation of the values of the various circuit elements from the design data

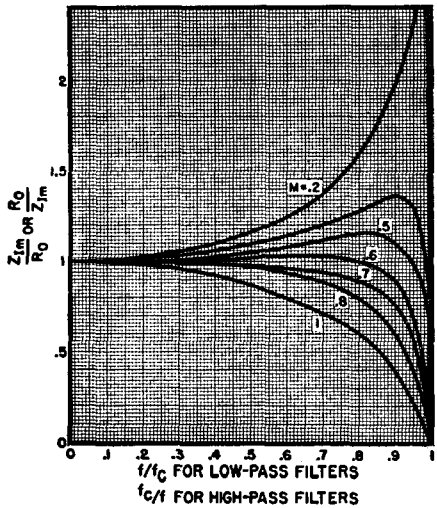

Fig. 16-11. Effect of porameter m on image impedance characteristics.

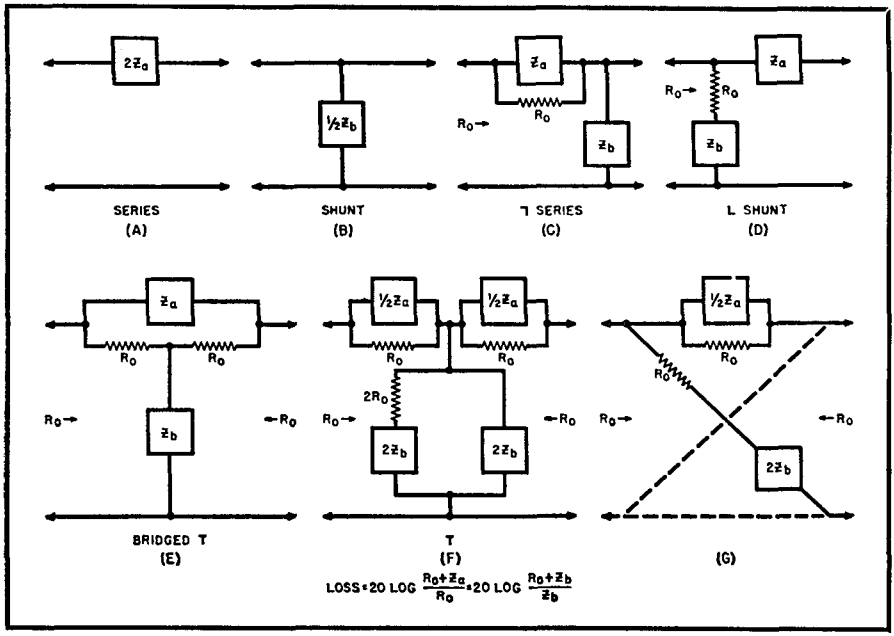

Table 4. Types of equalizer networks. In types (A) and (B), both input and output impedance vary. Types (C) and (D) have a constant input impedance. Types (E), (F) and (G) are symmetrical and have constant input and output impedances.

and the desired attenuation characteristic which is to be achieved by the completed filter.

An accurate set of curves for the attenuation loss of high- and low-pass sections is given in Fig. 16-10. This chart gives curves for the attenuation of filter sections for different values of the parameter m. (For half-sections, the attenuation values should be divided by two.) It must be noted in the use of these curves that they are the ideal curves for dissipationless circuit elements, and that the actual curves will be somewhat different due to dissipation in the network. When the desired attenuation curves of a filter designed to solve some specific practical problem cannot be attained by the use of a single section filter, several sections, connected on a matched image impedance basis, may be used to give the desired characteristic. When such sections are combined in this manner, the resulting insertion loss is obtained by adding together the losses of each section as given in Fig. 16-10. By suitable choice of the parameter m, and hence the frequency of infinite attenuation and the sharpness of cutoff, a wide variety of attenuation characteristics can be obtained.

Since the equations for the image impedance of the various filter sections contain terms which vary with frequency, there can be no exact impedance match between a wave filter and resistive terminations at the generator and at the load. However, the mismatch can be minimized by selection of the proper value of the parameter m. The curves in Fig. 16-11 show the image impedance characteristics of filter sections within the transmission band for various values of m. They show that a value of $m = 0.6$ provides the closest impedance match to a constant resistance R_o over the greatest part of the frequency band. For this reason, practical filters are generally designed with terminal half-sections having $m = 0.6$ to match resistive input and output impedances, and with the intermediate sections chosen to give whatever special attenuation characteristic may be desired.

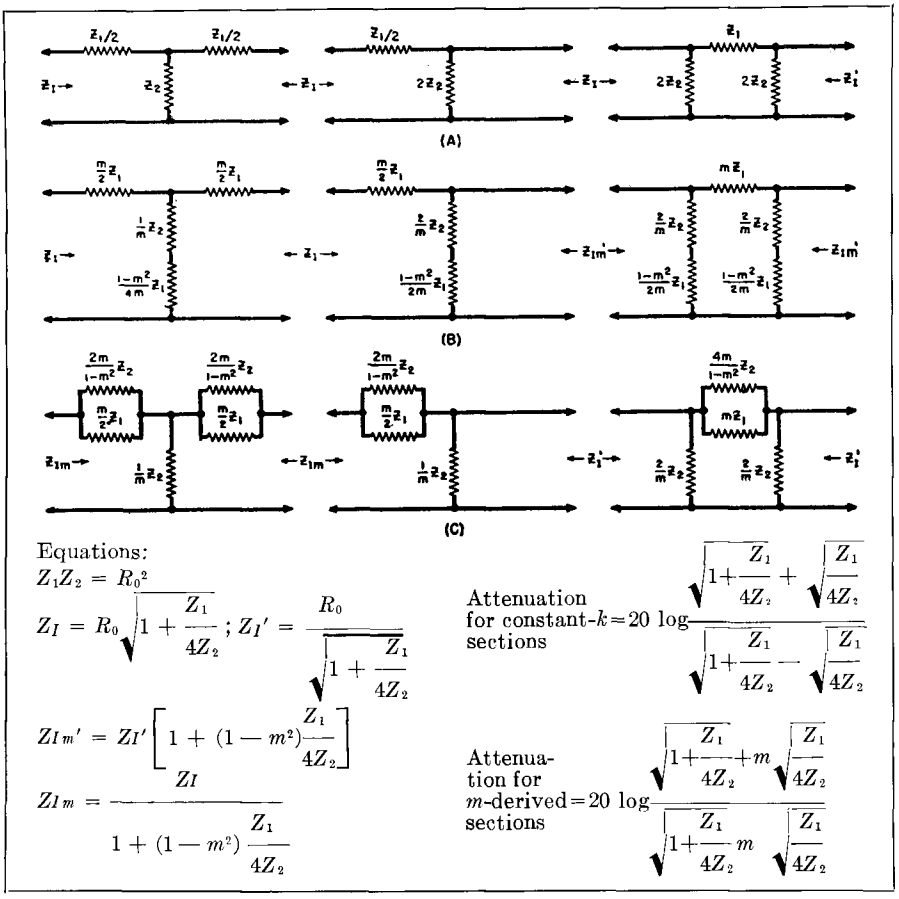

Fig. 16-12. Circuit configurations and equations for basic ladder filter sections. (A) Constant-k, (B) series m-derived, and (C) shunt m-derived.

The procedure is usually the same in the design of any type of wave filter and is generally done in a number of steps:

1. Determine the cutoff frequencies which mark the edge of the pass-band to give the required characteristics, and the load resistance of the circuit into which the filter is to be inserted.

2. Decide whether T or π intermediate sections are to be used. This decision is based primarily upon considerations of convenience or economy, since the electrical performance of the two types is identical. (Thus, the use of shunt-derived high-pass sections will result in a saving in the required number of inductances, which are generally more expensive than condensers.)

3. Design the terminating half-sections according to the tables, for the chosen cut-off frequencies and terminating impedance.

4. Decide on the number and type of intermeidate sections to be used. The more sections used, the greater is the attenuation in the stop band. More than two intermediate sections are not generally required.

5. Select the frequencies at which the different intermediate sections are to have their maximum attenuation and design the sections according to the formulae given in the appropriate tables.

By following this procedure and using the various tables and charts given in this section, practical wave filters may readily be designed to meet the different filter problems which arise in general electronic practice.

It is sometimes necessary in electrical

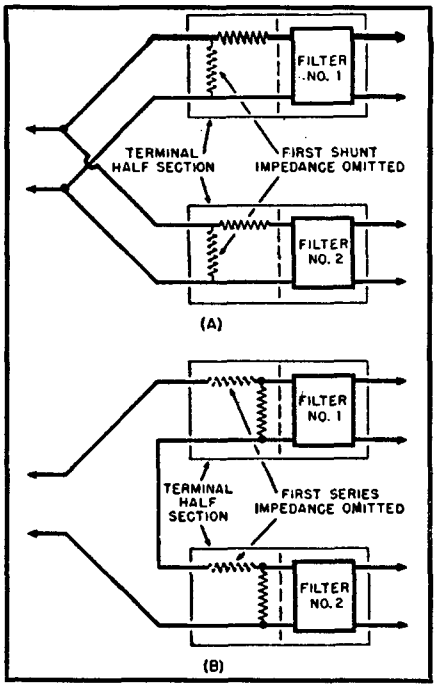

Fig. 16-13. Method of connecting complementary filters for operation in parallel and series.

systems to operate filter sections in parallel at their input or output terminals. In such systems, the image impedance of each filter is across the common terminals and, since the filter impedance may be approximately constant resistance in their pass-band but are reactive and vary with frequency in the stop-band, the parallel impedance and insertion loss are unfavorably affected. Proper design methods must be used to eliminate this factor. Arrangements of this type are used widely in audio work in frequency-dividing networks, such as for loudspeaker systems, and the manner in which proper impedance matching is obtained will be described in this section.

In using dividing networks for most types of loudspeaker systems, the frequency band is divided into two parts by means of a low-pass and a high-pass filter operated in series or in parallel. When filters are connected in this manner, it is found that it is necessary to employ special design methods only in the first terminal half-section of each of the filters. The changes in design which have been found necessary in filters which are to be used in this type of service are as follows:

(a) When parallel operation is required, the low- and high-pass filters must have T intermediate sections, and therefore L input half-sections. If the two input half-sections are designed for $m = 0.6$ and the two filters have equal load resistances, then normal impedance matching is obtained throughout, by omitting the shunting impedances at the inputs of both filters.

(b) When series operation is required, the filters must have π intermediate sections, and therefore π input half-sections. Then if the input half-sections are designed for $m = 0.6$ and the two filters have equal load resistances, normal impedance matching is obtained by omitting the series impedances at the inputs of both filters.

These relations are indicated in Fig. 16-13. They hold true not only for loud-

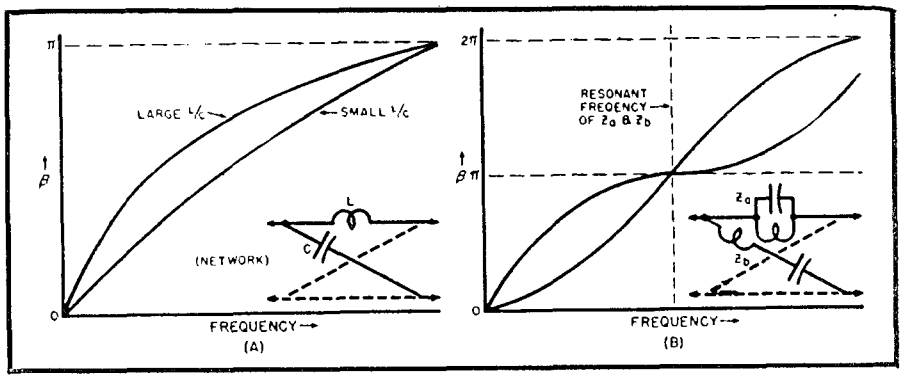

Fig. 16-14. Phase-shift characteristics of two simple types of all-pass sections.

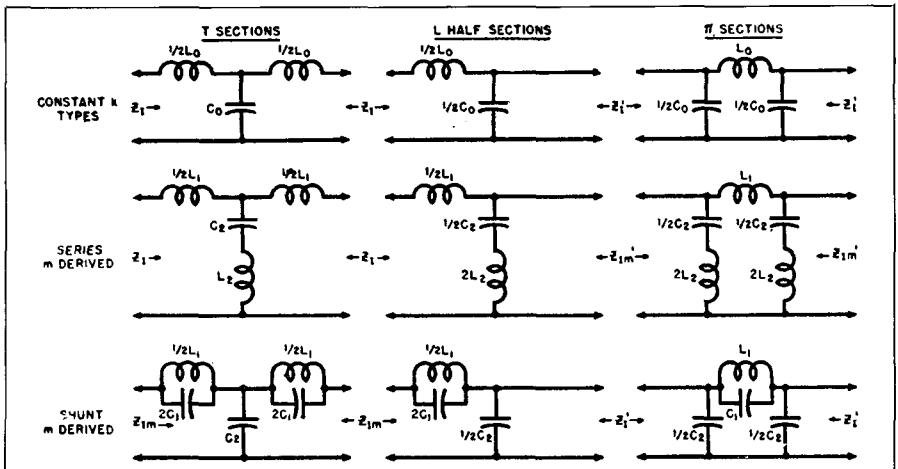

R_0=load resistance f_R=a frequency of high attenuation
f_c=cut-off frequency =resonant freq. of tuned circuits

$$L_0 = \frac{R_0}{\pi f_c},\ L_1 = mL_0,\ L_2 = \frac{1-m^2}{4m} L_0$$

$$C_0 = \frac{1}{\pi f_c R_0},\ C_1 = \frac{1-m^2}{4m} C_0,\ C_2 = mC_0$$

$$f_c = \frac{1}{\pi\sqrt{L_0C_0}},\ f_R = \frac{1}{2\pi\sqrt{L_1C_1}} = \frac{1}{2\pi\sqrt{L_2C_2}}$$

$$\frac{f_R}{f_c} = \frac{1}{\sqrt{1-m^2}},\ m = \sqrt{1-\left(\frac{f_c}{f_R}\right)^2}$$

$$Z_I = R_0\sqrt{1-(f/f_c)^2},\ Z_I' = \frac{R_0}{\sqrt{1-(f/f_c)^2}}$$

$$Z_{I\,m} = \frac{Z_I}{1-(1-m^2)\,(f/f_c)^2}$$

$$Z'_{I\,m} = Z'_1\,[1-(1-m^2)\,(f/f_c)^2]$$

Table 5. Information for the design of low-pass filter sections.

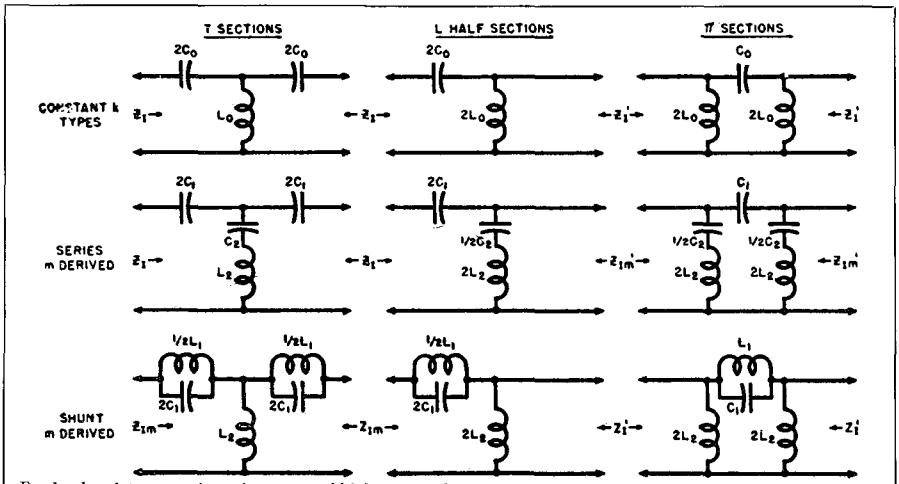

R_0=load resistance f_R=a frequency of high attenuation
f_c=cut-off frequency =resonant freq. of tuned circuits

$$L_0 = \frac{R_0}{4\pi f_c},\ L_1 = \frac{4m}{1-m^2} L_0,\ L_2 = \frac{L_0}{m}$$

$$C_0 = \frac{1}{4\pi f_c R_0},\ C_1 = \frac{C_0}{m},\ C_2 = \frac{4m}{1-m^2} C_0$$

$$f_c = \frac{1}{4\pi\sqrt{L_0C_0}},\ f_R = \frac{1}{2\pi\sqrt{L_1C_1}} = \frac{1}{2\pi\sqrt{L_2C_2}}$$

$$\frac{f_c}{f_R} = \frac{1}{\sqrt{1-m^2}},\ m = \sqrt{1-(f_R/f_c)^2}$$

$$Z_I = R_0\sqrt{1-(f_c/f)^2},\ Z_I' = \frac{R_0}{\sqrt{1-(f_c/f)^2}}$$

$$Z_{I\,m} = \frac{Z_I}{1-(1-m^2)\,(f_c/f)^2}$$

$$Z'_{I\,m} = Z'_I\,[1-(1-m^2)\,(f_c/f)^2]$$

Table 6. Information for the design of high-pass filter sections.

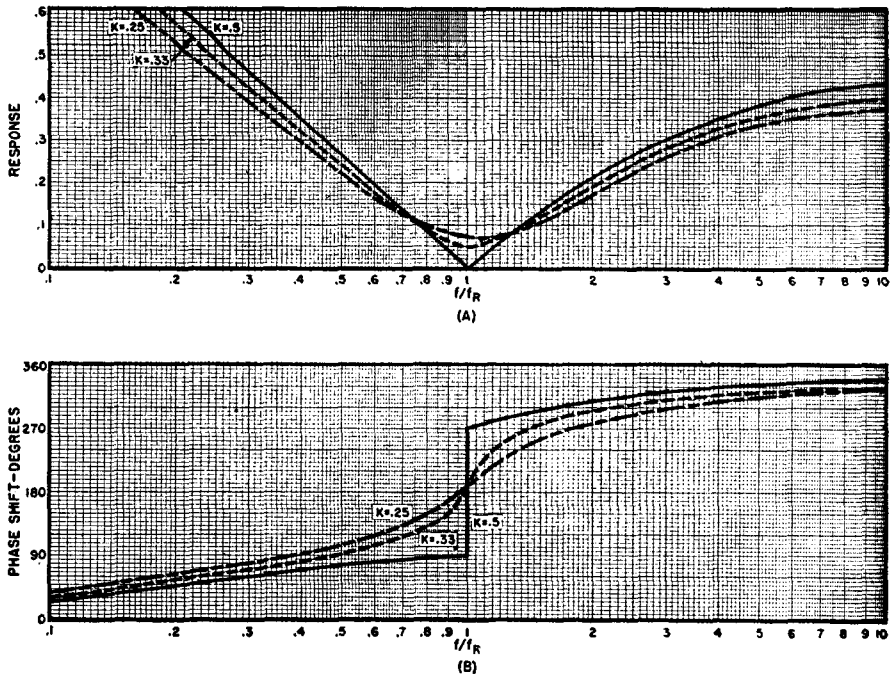

Fig. 16-15. (A) Amplitude response and (B) phase characteristics of parallel-T circuit shown in Fig. 16-20, for various values of the parameter K.

speaker dividing networks, but for all cases of two complementary filters, i.e., where those frequencies that lie in the stop-band of one filter are in the pass-band of the other.

Dividing networks for loudspeaker systems are not of the sharp cut-off type, and are generally designed to have from 12 to 18 db attenuation one octave away from the cross-over frequency. The circuits of the most common types of networks for this service are given in Table 9, which includes also the necessary design formulae. The upper two networks consist of input half-sections designed as indicated above, followed by constant-k full-sections, and give an attenuation of approximately 20 db for the first octave beyond cross-over. The lower two networks consist of the same input half-sections followed by constant-k half-sections, and give an attenuation of about 15 db for the first octave away from cross-over. The attenuation curves for these four networks are given in Fig. 16-16.

Since loudspeaker frequency-dividing networks carry the full output power of the amplifier, they must be designed for low transmission loss. When high-Q coils having low resistance are used, the loss may be kept down to the order of 0.5 db in systems of the type described above.

A type of circuit which has been found extremely useful in audio-frequency network design is the resistance-capacity single-frequency rejection circuit. Its usefulness is derived mainly because of the difficulties which attend the use of the standard L-C resonant circuit for many audio-frequency applications. Because audio frequencies are low, the inductances tend to become quite large physically, and high Q is generally difficult to attain, especially at the lower audio frequencies.

The R-C circuit can be made to exhibit the characteristics of a series-resonant L-C circuit, or to have a sharp cusp-shaped null at the desired frequency. By proper use of this circuit many desirable results can be obtained

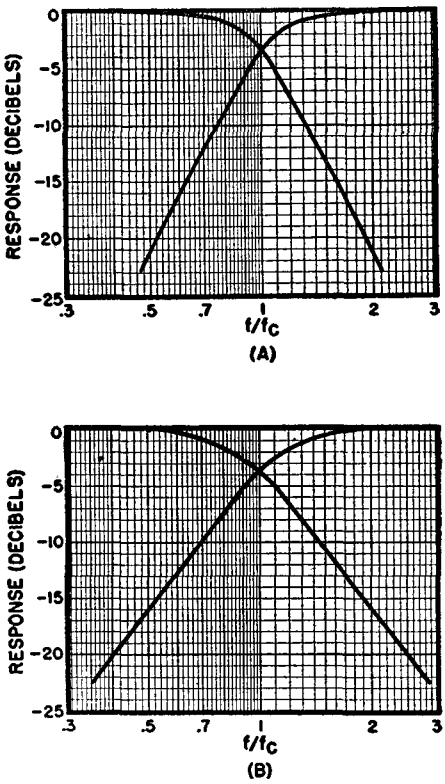

Fig. 16-16. Response curves of networks shown in Table 9. (A) is for the upper two networks, and (B) is for the lower two.

economically and in a small space. The circuit which gives these characteristics is the resistance-capacitance parallel-T network which is shown in Fig. 16-20, together with the design equations which determine its performance. When the parameter K in this circuit is assigned the value ½, a sharply selective cusp-shaped curve is obtained and there is a null for the desired frequency. When other values are assigned to K the curve approaches that of an L-C tuned circuit. The amplitude and phase characteristic of the circuit for various values of K are shown in the sets of curves in Fig. 16-15.

The transfer characteristic of this type of network, exhibiting high attenuation at the one resonant frequency, may be made to serve many functions where low cost or space requirements are an important factor. Wherever a dip may be desired in the response at some particular frequency, a parallel-T network may be inserted directly in the circuit to give the required attenuation and frequency response characteristic. When a peak in the response is desired at some particular frequency, this network may be used in a feedback circuit in an amplifier to give reduced feedback (and hence an increase in response) at the frequency to which it is tuned.

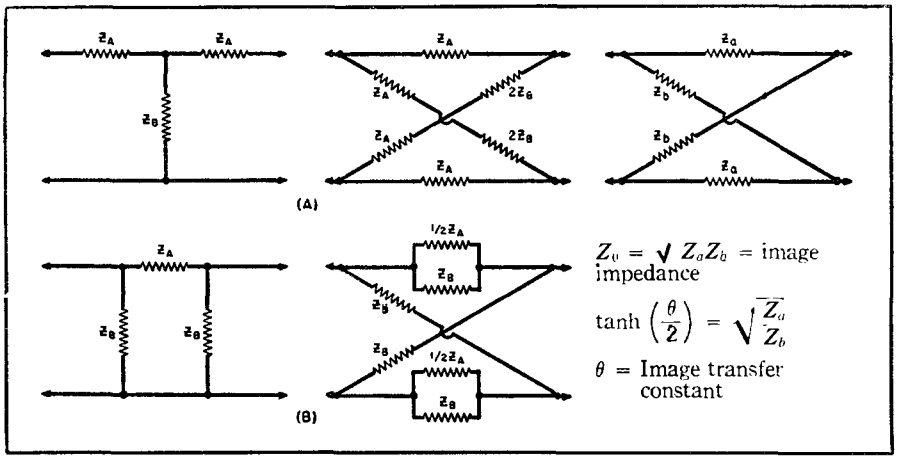

Fig. 16-17. (A) Lattice equivalent of T section. (B) Lattice equivalent of π section. At right, performance equations for general symmetrical lattice networks.

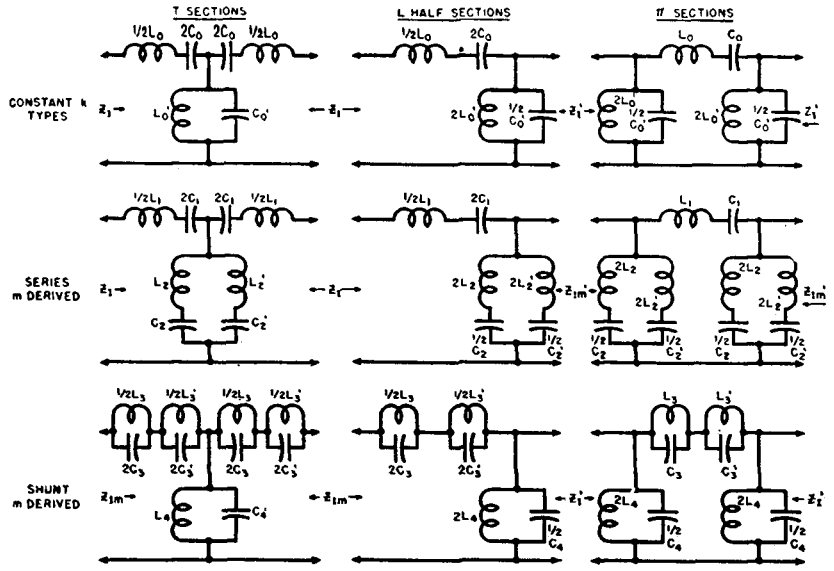

$$g = \sqrt{\left(1 - \frac{f_{1R}^2}{f_1^2}\right)\left(1 - \frac{f_{1R}^2}{f_2^2}\right)}$$

$$h = \sqrt{\left(1 - \frac{f_1^2}{f_{2R}^2}\right)\left(1 - \frac{f_2^2}{f_{2R}^2}\right)}$$

$$a = \frac{(1 - m_1^2) f_{2R}^2}{4 g f_1 f_2}\left(1 - \frac{f_{1R}^2}{f_{2R}^2}\right)$$

$$= \frac{(1 - m_2^2) f_1 f_2}{4 g f_{1R}^2}\left(1 - \frac{f_{1R}^2}{f_{2R}^2}\right)$$

$$b = \frac{1 - m_2^2}{4g}\left(1 - \frac{f_{1R}^2}{f_{2R}^2}\right)$$

$$c = \frac{(1 - m_1^2)}{4h}\left(1 - \frac{f_{1R}^2}{f_{2R}^2}\right)$$

$$d = \frac{(1 - m_1^2) f_{2R}^2}{4 h f_1 f_2}, \left(1 - \frac{f_{1R}^2}{f_{2R}^2}\right)$$

$$= \frac{(1 - m_2^2) f_1 f_2}{4 h f_{1R}^2}\left(1 - \frac{f_{1R}^2}{f_{2R}^2}\right)$$

When $m_1 = m_2$:

$g = h$, $a = d$, $b = c$,

$$f_{1R} = \frac{f_1 f_2}{f_{2R}}, \quad m_1 = m_2 = \frac{h}{1 - (f_1 f_2 / f_{2R}^2)}$$

$$f_{2R}^2 = \frac{f_1^2 + f_2^2 - 2 m^2 f_1 f_2}{2(1 - m^2)}$$

$$+ \sqrt{\left(\frac{f_1^2 + f_2^2 - 2 m^2 f_1 f_2}{2(1 - m^2)}\right)^2 - f_1^2 f_2^2}$$

R_0 = load resistance

f_1 = lower freq. limit of pass band

f_2 = higher freq. limit of pass band

f_{1R} = a freq. of high attentuation in the low freq. attentuating band

f_{2R} = a freq. of high attentuation in the high freq. attenuating band

$$L_0 = \frac{R_0}{\pi(f_2 - f_1)}, \quad L_0' = \frac{(f_2 - f_1) R_0}{4\pi f_1 f_2}$$

$$L_1 = m_1 L_0, \; L_2 = a L_0, \; L_2' = c L_0$$

$$L_3 = \frac{1}{b} L_0', \; L_3' = \frac{1}{d} L_0', \; L_4 = \frac{1}{m_2} L_0'$$

$$C_0 = \frac{f_2 - f_1}{4\pi f_1 f_2 R_0}, \quad C_0' = \frac{1}{\pi(f_2 - f_1) R_0}$$

$$C_1 = \frac{1}{m_2} C_0, \; C_2 = \frac{1}{b} C_0, \; C_2' = \frac{1}{d} C_0$$

$$C_3 = a C_0', \; C_3' = c C_0', \; C_4 = m_1 C_0'$$

$$m_1 = \frac{(f_1 f_2 / f_{2R}^2) g + h}{1 - f_{1R}^2 / f_{2R}^2}, \quad m_2 = \frac{g + (f_{1R}^2 / f_1 f_2) h}{1 - f_{1R}^2 / f_{2R}^2}$$

Table 7. Information for the design of band-pass filter sections. Additional equations to go with this table are given in the text.

By using a considerable amount of negative feedback applied through a parallel-T network, so that there is high degeneration in the amplifier at all frequencies except those near the null frequency of the network, a band-pass amplification curve will be attained which closely approximates the usual *L-C* tuned-circuit characteristic. Values of K between 0.2 and 0.5 are found to give the best results in this type of application. Oscillators can be designed without the necessity of using tuned circuits by making use of the feedback principle. By using the parallel-T network (with a value of $K = 0.5$ to give a complete null at the resonant frequency) for negative feedback and a certain amount of positive feedback to cause oscillation, audio oscillators can readily be constructed which are stable and have very low distortion.

The manner in which the parallel-T network may be used in a circuit to give the various frequency response characteristics which have been described is indicated in the block diagram in Fig. 16-19. The network is used in general in a high impedance circuit, whether it is in the feedback circuit or inserted directly in the signal circuit. By proper choice of the resonant frequency and the amount of attenuation at resonance, the use of parallel-T networks can give the wide variety of frequency response characteristics which have been described. This type of circuit can be used to give low-frequency or high-frequency lift or attenuation, and is also capable of giving high-pass, low-pass or band-pass frequency characteristics.

When the parallel-T network is used in the manner described, it gives frequency characteristics which are often more desirable for many applications than the standard *R-C* lift and attenuation characteristics. There are also certain applications, particularly in high-impedance circuits at low frequencies, where the use of *L-C* resonant circuits is impractical. Normally, however, the parallel-T network is not capable of attaining the results which are possible with good *L-C* equalizers and wave filters, but is widely used for reasons of economy and space requirements.

There are certain audio-frequency network applications where it is necessary to alter the phase or time relations of the various frequency components of the signal without altering the amplitude relations. Circuits which perform this function are known as all-pass networks. An all-pass filter has zero attenuation for all frequencies within the range which is of interest, and can be designed to have the desired phase shift characteristics so that it may be used as a phase equalizer or to correct phase distortion introduced by other parts of a system. It can also be used to introduce a time delay in the transmission of a signal.

In general, phase distortion in a network occurs when the relative phases of various components of the signal are not the same in the output as in the input. For any individual frequency component, the difference in phase between the output and input voltage can be expressed in terms of the time of transmission through the circuit according to the relation

$$\text{Phase Shift} = \mathrm{r}\,\omega + n\,\pi \text{ radians}$$

where n is an integer, $\omega = 2\pi f$, and τ is termed the delay time of the network. In order for the network to have zero phase distortion, τ must remain constant for all frequencies. In other words, the curve of phase shift as a function of frequency must be a straight line passing through an integral multiple of π at zero frequency. If this condition is satisfied, then any voltage component

$$e = E_1 \sin\,(\omega t + \beta)$$

of the input signal will be represented by $e = E_2 \sin\,[\omega\,(t\,\tau) + \beta]$ in the output. Thus, when β is constant the relative phases of all components of the signal are undistorted and the signal remains unchanged except for a time delay τ, a possible phase reversal of 180° (depending upon the value of the integer n), and whatever amplitude relations it was desired to introduce by the transmission network.

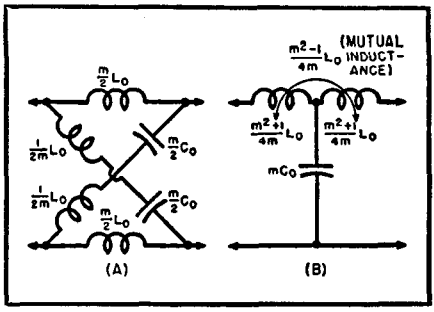

Fig. 16-18. Equivalent lattice (A) and T (B) m-derived low-pass sections when m is greater than unity which may be used for time delay.

The characteristics of the all-pass phase-correction network cannot in general be realized by the ladder-type networks which have been described, but must instead make use of the properties of the more general lattice network. The lattice structure is the most general type of symmetrical filter section that can be devised, and includes the T and π ladder sections as special cases. Almost all of the network problems encountered in general engineering practice can be solved by the use of ladder sections, and lattice networks usually need not be considered. However, the exception is in the case of phase-compensation and time-delay networks, and here the properties of lattices must be used.

The relationship between ladder and lattice networks may be seen from Fig. 16-17, which shows the transformations necessary to convert any symmetrical T or π section to an equivalent lattice and the performance equations for the general symmetrical lattice network. It can be seen that any symmetrical T or π section can be converted to a lattice, but that the reverse transformation of a lattice to a T or π is not necessarily possible. Thus, the transformation from a lattice to a symmetrical T will result in a physically realizable structure only when it is possible to subtract the series arm Z_a of the lattice from the diagonal and have a physically realizable remainder; and the conversion from a lattice to a symmetrical π can be performed only when it is physically possible to subtract the admittance $1/Z_b$ of the diagonal lattice impedance from the admittance of the series impedance arm and have a physically realizable remainder.

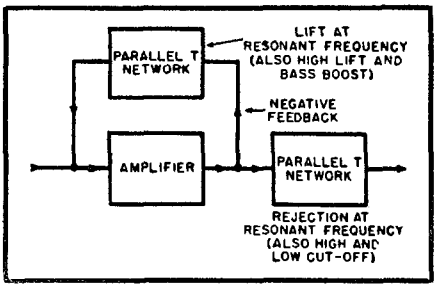

Fig. 16-19. Method of using parallel-T networks with an amplifier to give various frequency-response characteristics.

An all-pass network can be obtained by making use of a lattice network in which Z_a and Z_b are reactances which are reciprocal with respect to the desired image impedance R_o. This gives a pass band in which the attenuation constant α is zero, and an image impedance that is a constant resistance R_o for all frequencies. Under these conditions the phase shift β is given by:

$$\tan\frac{\beta}{2} = -j\sqrt{\frac{Z_a}{Z_b}} = \pm j\sqrt{\frac{Z_a^2}{R_o^2}}$$

The variation of the phase shift β with frequency is determined by the number and location of the internal zeros and poles in the impedance Z_a, and by the value of the reactances. Typical phase-shift characteristics for two different networks of this type are given in Fig. 16-14. It may be noted by comparison with Fig. 16-17 that these networks have no T or π section equivalents.

A type of network which is widely used for providing time delay is the m-derived low-pass filter in which the value of m is made greater than unity. In this network, it happens that although the equivalent T section requires a negative inductance in series with a capacitance, this can physically be realized by the use of mutual inductance. The manner in which this is accomplished is seen in Fig. 16-18, which shows the m-derived lattice and its equivalent T section where m is greater than unity. The low-pass π

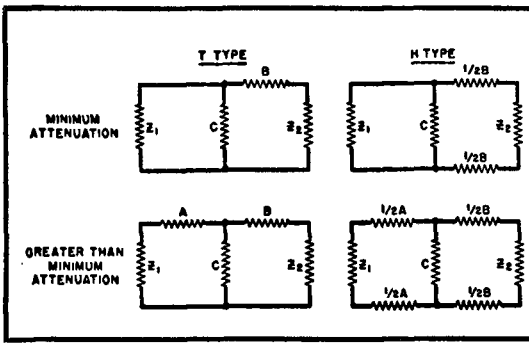

$$R = \frac{I_2}{I_1} = \sqrt{\frac{Z_2}{Z_1}} = \sqrt{\frac{Z_2 - Z_1}{Z_1}}$$

$$A = \frac{2Z_1 - 2R\sqrt{Z_1Z_2}}{1 - R^2} - Z_1$$

$$B = \frac{2Z_2 - 2R\sqrt{Z_1Z_2}}{1 - R^2} - Z_2$$

$$C = \frac{2R\sqrt{Z_1Z_2}}{1 - R^2}$$

For top circuits, $Z_2 > Z_1$

For bottom circuits, $Z_1 \gtrless Z_2$

Table 8. Information for the design of impedance-matching networks.

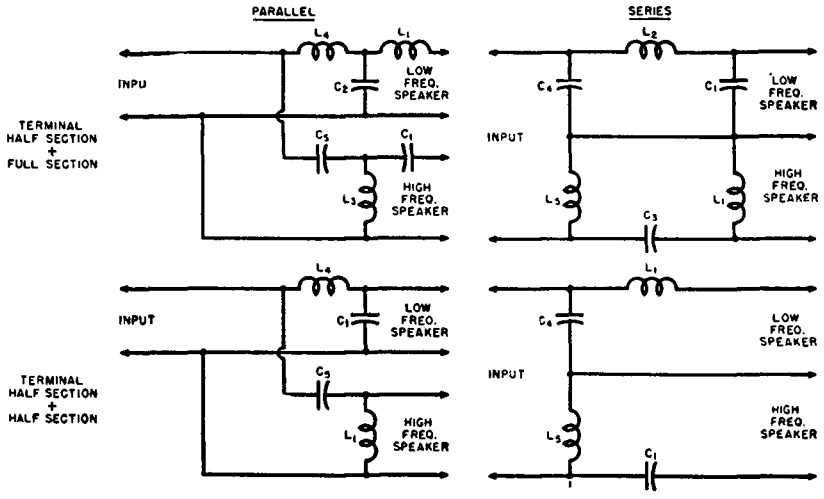

R_0 = speaker resistance

f_c = cross-over frequency

m = design constant = 0.6

$$L_1 = \frac{R_0}{2\pi f_c},\ L_2 = 2L_1,\ L_3 = \tfrac{1}{2}L_1$$

$$L_4 = (1 + m)\,L_1,\ L_5 = \frac{1}{1 + m}\,L_1$$

$$C_1 = \frac{1}{2\pi f_c R_0},\ C_2 = 2C_1,\ C_3 = \tfrac{1}{2}C_1$$

$$C_4 = (1 + m)\,C_1,\ C_5 = \frac{1}{1 + m}\,C_1$$

Table 9. Information for the design of frequency-dividing networks.

section is not physically realizable when m is greater than unity, since it requires always a negative capacitance and is unrealizable without the aid of negative resistance.

The characteristics of this type of time-delay network are given in Table 10 in a form which is convenient for practical calculation. The curves for the delay characteristics for different values of m show that the curve which has been drawn for $m = 1.27$ offers the flattest possible delay characteristic up to about $0.55\omega_0$. Therefore, the procedure in designing a delay line to have a given time delay over some definite frequency band is to determine the time delay for a single low-pass section having a value of $m = 1.27$ and a cut-off frequency ω_0 equal to 1/0.55 times the highest frequency which is of interest, and then to design a sufficient number of such sections in tandem to give the required delay. This network may then be matched to other filter networks in the conventional manner, and in particular may be terminated in half-sections having a value of $m = 0.6$ to obtain better matching to a resistive load. The choice of whether to use a lattice or the equivalent T section as indicated in Fig. 16-18 will generally depend upon considerations of economy and facility of construction, since both types yield identical results.

Impedance Matching

Because of the importance of the terminating impedances in determining the performance of electrical networks, it is often necessary to be able to change the impedance of a network in order to match it properly to another network. A simple and convenient method of matching unequal impedances is by means of resistive impedance matching networks.

The circuits which are most generally used for this type of service are the T and H type networks, where the T network is used principally in unbalanced circuits and the H in balanced circuits. The basic circuit configurations of these networks, and the formulae for their design, are given in the chart in Table 8. From the design equations it can be seen

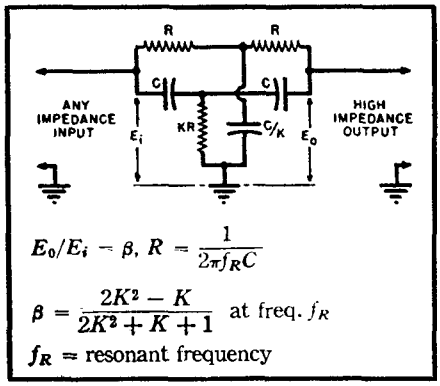

Fig. 16-20. Basic parallel—T R-C filter.

that whenever resistive networks are used for impedance transformation the network introduces a certain amount of attenuation, while there is no such loss when a transformer is used. However, resistance networks have the advantages of lower cost and better frequency response, and the loss in level is not generally a major consideration since additional gain in amplifier circuits is relatively easy to obtain.

The matching networks shown in the table may be used both to match input and output impedances, and at the same time to introduce any desired amount of attenuation. When the networks are used only to match two unequal impedances, with minimum insertion loss, the U or L type networks should be used. These are the limiting cases of the T and H networks operating between unequal impedances, with the series elements on the side of the smaller impedance made zero to give minimum loss. The minimum loss is given by the equation:

$$R = \frac{I_2}{I_1} = \sqrt{\frac{Z_2}{Z_1}} - \sqrt{\frac{Z_2 - Z_1}{Z_1}}$$

where $Z_2 > Z_1$, and is seen to depend only upon the relative values of the terminating impedances. When greater loss is desired, the T or H type will give the required attenuation with matched impedances.

Networks of this type may also be of considerable value in many filter appli-

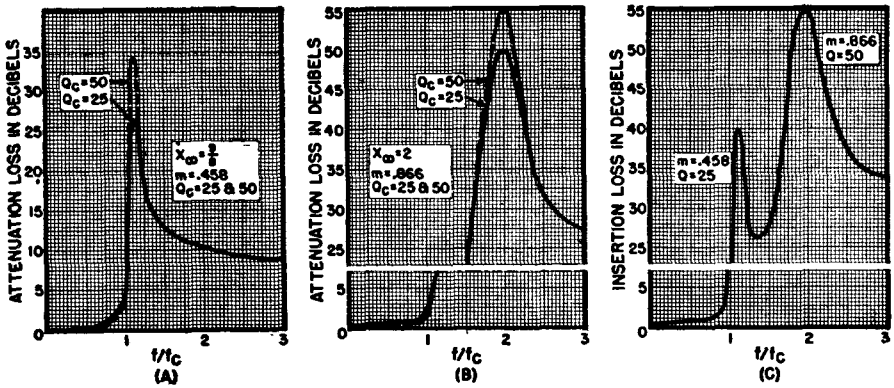

Fig. 16-21. (A) and (B) Attenuation curves of two different networks with different values of m, for two values of Q. (C) Attenuation characteristic of a composite filter made up of two of the sections shown in (A) and (B).

cations where there may be undesirable interactions between tandem filter sections. In such cases a resistive T or H attenuator with $Z_1 = Z_2$ (and having for instance 6 db attenuation) will generally be found to provide sufficient isolation between the two filters.

The theoretical curves and data which are customarily used in the design of electrical networks are always given in terms of dissipationless circuit elements. However, in practice it is found that circuit elements have appreciable losses, which prevent the theoretical curves from ever being attained. The customary procedure in network design is to base the design upon the lossless structure, modified according to the knowledge of what will be the effects of circuit dissipation upon the theoretical design.

In audio circuits the major losses are generally found to be in the inductances, which cannot easily be built to have high Q at these frequencies. By winding inductances in a toroidal form, using molybdenum permalloy powder cores, it is possible to attain Q's of the order of 100 to 200 at frequencies of about 3000 cycles. However, these coils are expensive and difficult to wind, and their Q is considerably lower at the low audio frequencies. These high-Q coils are used for networks which must be constructed to critical specifications and close tolerances, but in most practical work lower

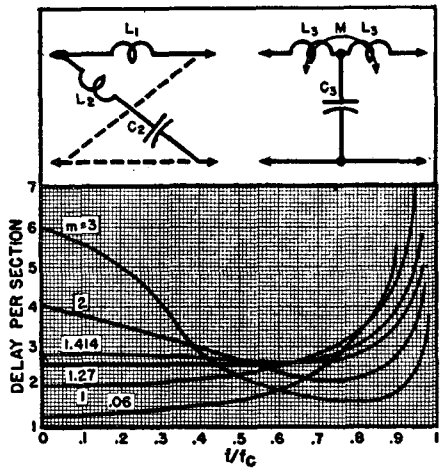

R_0 = load resistance = $\sqrt{L_0/C_0}$

f_c = cut-off frequency = $1/\pi\sqrt{L_0C_0}$

$$L_0 = \frac{R_0}{\pi f_c},\ L_1 = \frac{m}{2}L_0,\ L_2 = \frac{1}{2m}L_0$$

$$L_3 = \frac{m^2+1}{4m}L_0,\ M = \frac{m^2-1}{4m}L_0$$

$$C_0 = \frac{1}{\pi f_c R_0},\ C_2 = \frac{m}{2}C_0,\ C_3 = mC_0$$

$$T = \frac{2m}{\sqrt{1-(f/f_c)^2}\,[1-(1-m^2)(f/f_c)^2]}$$

Table 10. Design of time-delay networks. To obtain time delay per section in seconds, divide by $2\pi f_c$.

Q's of the order of 25 to 50 are generally quite acceptable.

The general effect of dissipation in a two-terminal network is to raise the minimum impedance attained, and to lower the maximum value of impedance. Thus, an inductance at low frequencies will approach a definite resistive value instead of zero, and at high frequencies will remain finite instead of approaching infinity. A series resonant circuit does not have zero impedance at its resonant frequency when dissipation is present, and parallel-resonant circuits have finite impedances at resonance. By taking these factors into account, the deviations from the theoretical dissipationless case, which are encountered when coils (or condensers) having low Q are used in practical designs, can be estimated without too much difficulty.

The effects of dissipation in attenuation equalizers are:

(1) the equalization of the actual network is less than the theoretical design value because of the finite minimum and maximum impedances,

(2) there is some mis-match between the equalizer and its termination, since the dissipative resistance tends to alter somewhat the reciprocal relationship between the series and shunt impedance arms.

The effects of incidental dissipation losses in wave filters are somewhat more complex, due to the increased complexity of the attenuation characteristics. These effects may be summarized briefly as follows:

(1) The theoretically infinite peaks in the attenuation loss and the reflection loss remain finite, depending upon Q and upon the closeness of the peak to the cut-off frequency.

(2) The attenuation is not zero in the passband, and phase shift is different from the dissipationless value.

(3) At the cut-off frequency, the attenuation is not zero, as in the dissipationless case, and the curve is rounded at the cut-off frequency.

Curves showing the effects of dissipation on the frequency characteristics of wave filters are given in Figs. 16-21A, B, and C. Figs. 16-21A and B show the attenuation curves of two networks with different values of m for two different values of Q. In Fig. 16-21 is given the characteristic of a composite filter made up of two of the sections shown in Figs. 16-21A and B.

From the information in these curves, it may be seen that with Q's of the order of 25 to 50, audio frequency networks may be designed according to the information given in this data with very little modification to correct for circuit dissipation.

REFERENCES

[1]Endall, Robert; "Audio Frequency Networks," Radio & Television News, Radio-Electronic Engineering Section, Vol. 9, No. 6-7, p. 14.

[2]Wroe, H. N., "Design of Attenuation Equalizers," Wireless Eng., p. 272-280, Oct. 1946.

[3]Edwards, W. J., "Design of Constant Impedance Equalizers," Wireless Eng., p. 8-14, Jan. 1947.

[4]Miller, W. C. & Kimball, H. R., "A Recording Console, Associated Circuits, and Constant B Equalizers," Jour. Soc. Motion Picture Eng., p. 187-205, Sept. 1944.

[5]Bowers, J. L., "R-C Bandpass Filter Design," Electronics, p. 131-133, Apr. 1947.

[6]Hastings, A. E., "Analysis of Resistance-Capacitance Parallel-T Network and Applications," Proc. IRE, p. 126-129 P, Mar. 1946.

[7]Kallman, H. E., "Equalized Delay Lines," Proc. IRE p. 646-657, Sept. 1946.

[8]Trevor, J. B., "Artificial Delay-Line Design," Electronics, p. 135-137, June 1945.

[9]Guillemin, E. A., "The Effect of Incidental Dissipation in Filters," Electronics, p. 130-135, Oct. 1946.

[10]Starr, A. T., "Electric Circuits and Wave Filters" (Pitman & Sons, London, 1938).

[11]Motion Picture Sound Engineering, Ch. XV-XX, XXXIII (Van Nostrand, N. Y., 1938).

[12]Terman, F. E., "Radio Engineers' Handbook," p. 197-251 (McCraw-Hill, N. Y., 1943).

CHAPTER 17

Tone Control (Equalizers)

A discussion of R-C and Resonant systems, Record Equalizers and Special Program Equalizers.

Resistance-Capacitance (R-C) Networks

● Nearly all of the simpler means for tone control or shaping the response curve are based on simple high and low pass filter circuits. For example, the circuit of Fig. 17-1A is a simple high pass filter while that of Fig. 17-1B is a low pass system.

In operation, the output from the circuit of Fig. 17-1A will increase with increasing frequencies applied to the input, while that from Fig. 17-1B will decrease as the frequency is increased. This is caused by the fact that the reactance of *C* decreases with increasing frequency and therefore, a smaller portion of the applied voltage appears across the condenser as the frequency increases. Theoretically the above action is true from zero frequency (dc) to infinitely high frequency, but for all practical purposes the effect is restricted to a small section of the spectrum. The change in response is negligible beyond the frequency limits at which the condenser reactance is equal to 1/10 and 10 times the value of resistance in the circuit. There are many variations of these two simple circuits which are used for treble or bass attenuation.

Typical Tone Compensation Systems

To evaluate any form of tone control used in connection with an amplifier it is necessary to establish a reference point for both gain and frequency. For this discussion we will consider the gain of the amplifier at 400 cycles-per-second as the reference point, and all circuits mentioned will be classified accordingly as low or high frequency boost or attenuation systems.

The circuit of Fig. 17-2 is perhaps the most commonly used form of tone control but is seldom recognized as such. It consists of nothing more than a coupling condenser and the following grid resistor. By proper selection of the values of *C* and *R* this circuit may be adjusted to give negligible attenuation at the reference frequency and increasing attenuation as the frequency is reduced.

Due to other design considerations in the amplifier, this form of tone control is made variable only on rare occasions.

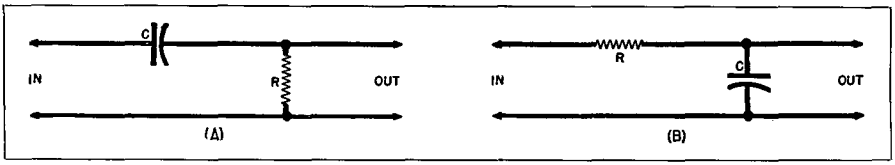

Fig. 17-1. (A) A simple high pass filter. (B) A commonly used low pass system.

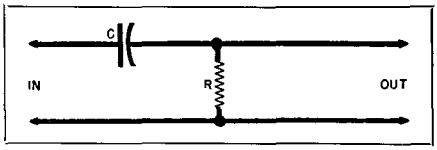

Fig. 17-2. Commonly used form of tone control.

The opposite of the action secured from the circuit of Fig. 17-2 may be obtained by the use of either Fig. 17-3A or 17-3B. Both of the circuits operate on the principle that the total impedance in the circuit increases as the frequency is reduced, thus forming a load impedance which varies inversely with the frequency. The circuit of Fig. 17-3A is most commonly used as the plate load for voltage amplifier tubes whose operating conditions are so adjusted that the stage gain increases as the plate load impedance rises. The circuit of Fig. 17-3B is commonly used with a tapped volume control and may be inserted as a second detector load impedance or as the grid return circuit of an amplifier stage. When the circuit of Fig. 17-3A is used as a microphone or pick-up load impedance the dotted line shown is used as the high output lead. When connected in this manner the condenser shunts the output terminals and therefore increases the ratio of output to input impedance as the frequency decreases. This circuit could be considered high frequency attenuation just as well as low frequency boost since the operation is the same.

Both circuits of Fig. 17-3 may be made variable in response by using different values of C selected by a switch or other means.

Fig. 17-4A and 17-4B show the most commonly used means of providing tone control on the upper portion of the audio spectrum. The most frequently used position for these circuits in an amplifier is the grid circuit of one or more of the amplifier tubes.

The circuit of Fig. 17-4A is used quite frequently by radio receiver manufacturers to give a smooth tone control which operates on the high frequency end of the audio passband.

Condenser C is usually selected so that when R_2 is zero the high frequency attenuation starts at a frequency near the reference point. As R_2 is increased C becomes increasingly less effective in bypassing the high frequencies, thus providing smooth control of the high frequency response of the amplifier. In the circuit of Fig. 17-4B both R_1 and R_2 are usually relatively high values of resistance and C a small capacitance. In this circuit the output at and below the reference frequency is approximately equal to $E_{in}R_2/(R_1 + R_2)$ and increases to a value approaching E_{in} as the frequency increases. When properly designed, all the foregoing circuits attenuate certain frequencies while maintaining normal response from the reference frequency to the opposite end of the band.

Fig. 17-5A and 17-5B show circuits similar to the above but applied in a manner which gives a stage gain variation with frequency. This is accomplished by connecting the filter section into a feedback circuit. Fig. 17-5A will

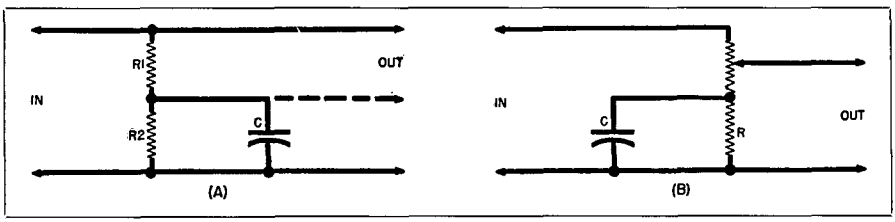

Fig. 17-3. (A) Circuit commonly used as the plate load for voltage amplifier tubes. (B) Circuit often used with a tapped volume control. This circuit may be inserted as a second detector load impedance in amplifier.

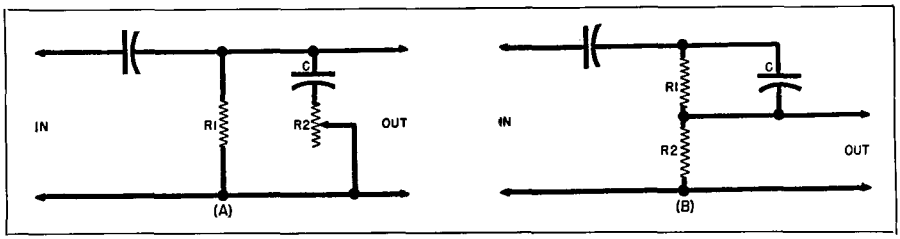

Fig. 17-4. (A) Circuit used in radio receivers to give smooth tone control on the high frequency end of the audio passband. (B) Another frequently used circuit which provides tone compensation for commercially-built receivers.

boost the higher frequencies when condenser C is chosen to have a value insufficient to provide an adequate bypass for cathode resistor R at the reference and lower frequencies. At the higher frequencies C becomes an effective bypass and thus removes degeneration from the tube circuit.

When properly chosen values of R_1, R_2 and C are used in the circuit of Fig. 17-5B, the stage may be made to have considerable inverse feedback at the high frequencies and relatively little at the reference and low frequencies. Condenser C should be so chosen that its reactance at the low frequencies is high with respect to the total impedance in the series-parallel combination of R_1, R_2 and R. Resistor R_1 is used to limit the amount of feedback at the high frequencies and R represents the impedance in the driving source or, in practice, the output impedance of the preceding stage (i.e., R_b and R_p of the preceding stage in parallel). The circuit of Fig. 17-5B must be carefully designed since the R-C network may give sufficient phase shift to the feedback signal for the stage to become regenerative at an unwanted frequency.

A word about the position of tone control systems in an amplifier may be in order at this time. Since nearly all of the simple tone control circuits described may be classified as the opposite of the name applied, care must be taken that a low frequency boost circuit is not followed by a high frequency boost circuit which operates by reducing the reference and low frequencies. For example, the circuit of Fig. 17-3A or 17-3B should not be followed by the circuit of Fig. 17-2A since these two circuits will tend to cancel out and produce flat response. In most phono and microphone amplifiers some bass boosting and, for high fidelity, some treble boost is desirable. Bass boost may be obtained by using the circuit of Fig. 17-3A in the

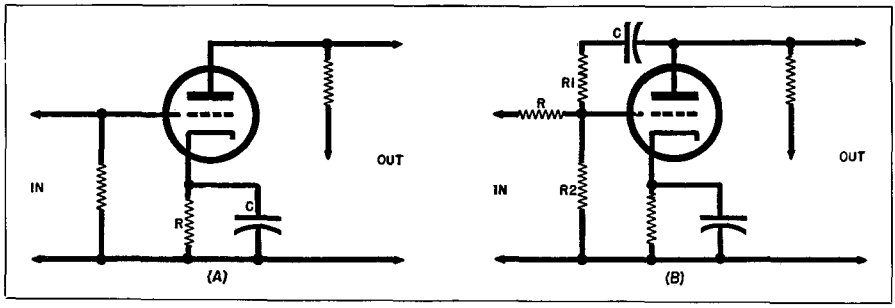

Fig. 17-5. (A) This circuit will boost the higher frequencies when condenser C is of too low a value to provide an adequate bypass for the cathode resistor at the reference and lower frequencies. (B) By choosing component values, this circuit can provide inverse feedback on the highs.

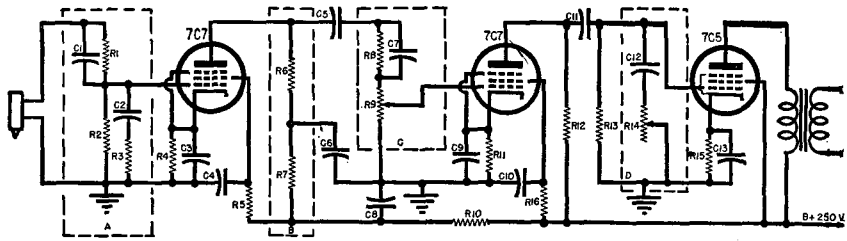

R_1—1.5 megohm, ½ w res.
R_2—3.3 megohm, ½ w. res.
R_3, R_6—100,000 ohm, ½ w. res.
R_4—1000 ohm, 1 w. res.
R_5—1.2 megohm, ½ w. res.
R_7—150,000 ohm, ½ w. res.
R_8, R_{13}—250,000 ohm, ½ w. res.
R_9—250,000 ohm, var. res.
R_{10}—47,000 ohm, ½ w. res.
R_{11}—470 ohm, 2 w wirewound res.
R_{12}—68,000 ohm, ½ w. res.
R_{14}—1 megohm var. res.
R_{15}—860 ohm, 2 w. wirewound res.
R_{16}—330,000 ohm, ½ w. res.
C_1—100 μμfd. mica cond.
C_2, C_7—.001 μfd., 400 v. cond.
C_3—25 μfd., 25 v. elec. cond.
C_4—.1 μfd., 400 v. cond.
C_5, C_{11}—.05 μfd., 400 v. cond.
C_6—.01 μfd., 400 v. cond.
C_8—8 μfd., 350 v. elec. cond.
C_9, C_{13}—50 μfd., 25 v. elec. cond.
C_{10}—.25 μfd., 400 v. cond.
C_{12}—.005 μfd., 400 v. cond.

Fig. 17-6. A pentode input amplifier which provides bass boost action. See Table.

input grid circuit (with the dotted line connected to the input grid) or the same circuit in the plate load for a pentode input amplifier as shown in Fig. 17-6. Treble boost may be obtained by using the circuit of Fig. 17-4B in the following grid circuit or the circuit of Fig. 17-5A in the cathode circuit of the following tube. If treble attenuation is desired, the circuit of Fig. 17-4A may be used in the grid circuit of the output tube. With push-pull output stages the condenser C and resistor R_2 of Fig. 17-4A may be connected from grid to grid. These circuits are also shown in Fig. 17-6.

In designing an amplifier having any of the bass or treble boost circuits described it must be remembered that the over-all gain of the amplifier is reduced at the reference frequency. Therefore, sufficient additional gain at the reference frequency must be included in the design to make up for that lost in the tone control circuits. The design of the amplifier must also provide for the additional gain which occurs at the boosted frequencies so that overloading, with resulting distortion at these frequencies, does not occur.

In the circuit of Fig. 17-6, a slight modification has been added in Section A which was not covered in the description of Fig. 17-3A. In Fig. 17-3A the low frequency boost is obtained at the cost of high frequency attenuation which becomes quite extensive as the frequency approaches the high end of the audio band. The addition of the 100 uufd condenser and the 100,000 ohm resistor in the circuit limits the high frequency attenuation of this circuit to approximately the attenuation at the reference frequency. The resistor and condenser values used in this circuit are found by calculation of admittances and impedances at each of several frequencies in the band desired, including the reference frequency.

These calculations, using the values assigned, indicate that the signal applied to the grid of the input tube, assuming constant voltage from the pick-up, will be approximately 61% at 50 cps, 33% at 100 cps, 21.5% at 400 cps and 21.8% at 4000 cps.

Sections B and C in Fig. 17-6 both affect the impedance of the plate load and therefore the gain of the input Type 7C7 tube. The gain at each of several frequencies in the desired band was obtained by calculating the plate load impedance at each frequency and interpolating the gain from the R-C

data given in a late *Sylvania* Technical Manual. At frequencies of 50, 100, 400, and 4000 cycles-per-second the gain of the input stage (assuming constant grid signal) will be approximately 164, 159, 145, and 120 respectively.

Section *D* has been used in the circuit of Fig. 17-6 to illustrate the most common form of high frequency attenuation circuit. The condenser value has been chosen to give a negligible effect at the reference frequency when the resistance, R_{14}, is set at zero. The plate resistor, R_{12}, for the second amplifier has been assigned a relatively low value so that the tube operation approximates a constant current generator. Under these conditions the voltage across the total plate impedance consisting of C_{12}, R_{12}, R_{13}, and the tube R_p in parallel is equal to IZ with Z variable with frequency. Using the values assigned, the signal reaching the output tube grid will approximate 100%, 100%, 95%, 88%, and 35% of the low frequency value, at the frequencies of 50, 100, 400, 800 and 4000 cycles-per-second when the 1 megohm control is set for maximum high frequency attenuation. When the 1 megohm control resistance is all in the circuit no appreciable high frequency attenuation will be introduced and the response will be that caused by sections *A*, *B*, and *C*.

By summarizing the results described above it is possible to plot the approximate response curve of the circuit in Fig. 17-6 from the pickup to the grid of the output tube from calculations of the over-all gain at the several frequencies. See table below.

Attenuation of Section D in Fig. 17-6.

Frequency (in c.p.s)	Over-all Gain	Attenuation of Sec. D. Max.	Min.
50	.61 x 164 x .5 x 80 x 1		4000
100	.33 x 159 x .503 x 80 x 1	2115	2115
400	.215 x 145 x .542 x 80 x 1		1352
400	.215 x 145 x .542 x 80 x .95	1287	
4000	.218 x 120 x .865 x 80 x 1		1810
4000	.218 x 120 x .865 x 80 x .35	633	

With 400 cps as the reference the response with minimum attenuation in section *D* would be +9.4 db, +3.9 db, 0, and +2.54 db at frequencies of 50, 100, 400, and 4000 cycles per second. With section *D* set for maximum high frequency attenuation the response at the same frequencies would be +9.83 db, 4.32 db, 0, and —6.127 db, respectively.

In all of the above calculations and results reported, all effects of tube and stray capacities have been neglected and it has been assumed that the output from the pickup is constant over the frequency range. Since these conditions do not exist in actual practice the circuit shown in Fig. 17-6 should be accepted as a basic illustration of the circuits used for tone compensation and control systems, and may require some modification if these exact characteristics are desired in a practical design.

Reference: Sylvania News, Vol. 15, No. 1.

Resonant Equalizers

In previous paragraphs we discussed various types of (*R-C*) tone controls (equalizers) employing resistance and capacitance. More flexibility is had with the "resonant" type of equalizer, as it has been found from actual listener tests (see Fig. 17-7) that to obtain a balance between the low and high frequency response is highly desirable. For best performance, the product of

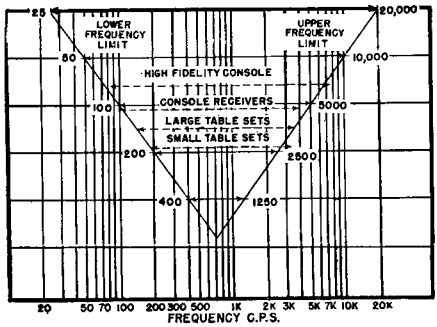

Fig. 17-7.

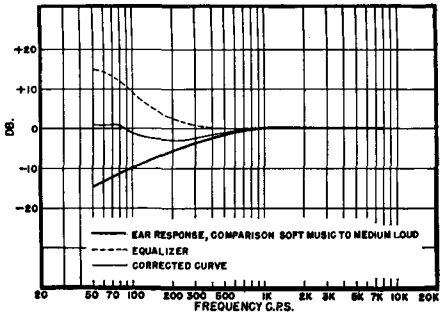

Fig. 17-8.

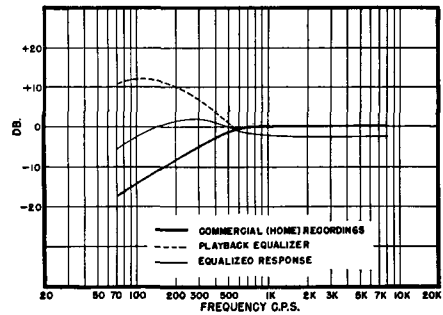

Fig. 17-9.

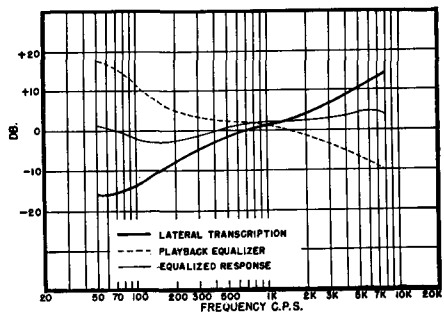

Fig. 17-10.

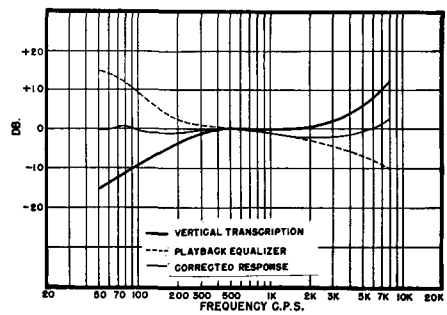

Fig. 17-11.

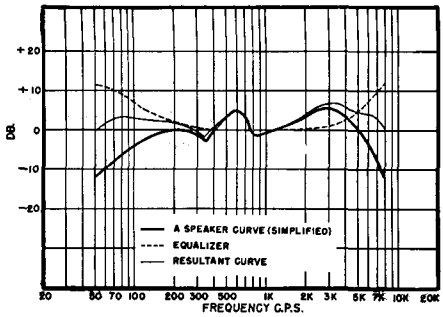

Fig. 17-12.

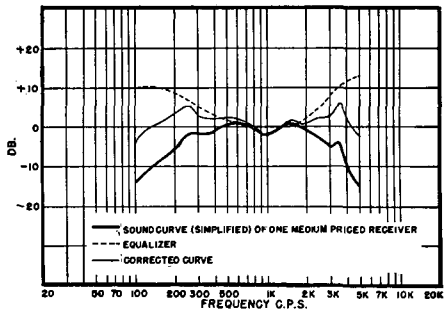

Fig. 17-13.

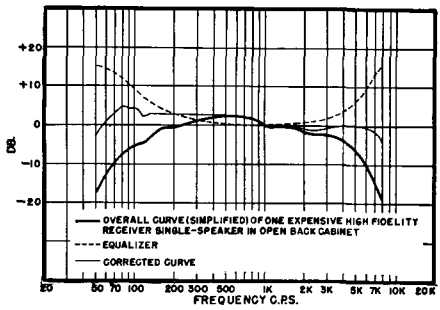

Fig. 17-14.

the low frequency and high frequency limits of the equipment should equal approximately 500,000.

It has been established that where an audio system in a receiver was good to only 200 cycles at the low frequency end a tone control was necessary and when it limited the high frequency end to 2500 cycles, the best balance of response was obtained. In the reproduction of phonograph records a similar condition exists, especially those rec-

ords having a sharp drop-off at the low end. Accordingly, to obtain balance the high end frequencies are often removed unnecessarily. While the sound becomes balanced to the ear the fidelity is, unfortunately, greatly decreased. Low notes which were not reproduced originally are still not reproduced, and the high notes are missed as well. The obvious answer then is to bring back the low notes through the use of an equalizer, thus increasing the over-all fidelity rather than reducing it.

Virtually all recording systems, whether discs, sound on film, sound on wire, embossed film, etc., require playback equalization as well as equalization when the recording is being made. The necessity for equalization is apparent.

Most microphones, pickups and loudspeakers can be effectively equalized. Low frequency droop used for dialogue equalization will greatly improve the intelligibility of speech. It will also permit higher power levels from speakers used in pa equipment. A portion of the power normally going to the speakers and not required for intelligibility is removed.

Mid-frequency equalization (low end and high end droop) is frequently used by radio amateurs to effect a maximum signal level in the frequencies most necessary for intelligibility. Various acoustic conditions will frequently lend themselves to equalization. For example, the absorption of high frequencies may easily be 15 db depending upon the drapes in the room, the number of people, as well as the presence of any other sound absorbing material. Another point of equalizer use comes from the realization that at low sound levels the ear is less responsive to low frequencies. This type of equalization is commonly called "bass boost."

In order to obtain smooth and positive control and not introduce hum into the audio circuits it is advisable to employ commercially made equalizers such as the CGE-1 developed by *U.T.C.* engineers. Reference to the curves will show how well such units are suited to many applications. The electrical components are stable, free from hum pickup, and dependable in operation.

This type of equalizer is readily adapted for use with commonly used audio amplifier equipment. As mentioned, the frequency correction curve with the *RC* type of tone control is a gradual slope and does not accomplish what is required in the boost condition. For example, if the circuit to be equalized is down 15 db at 5000 cycles, an equalizer which brings back this 15 db but also boosts 6 db at 1000 cycles is not desirable. Accordingly, the CGE-1 unit employs resonant circuits for both the low and high frequency boost. As will be noted from the curves with 15 db. boost at 8000 cycles the response curve is flat at 2000 cycles. A similar condition exists at the low end. Two controls are required, one either boosts (accenuates) or drops (attenuates) the low frequencies and the other either boosts or drops the high frequencies. This type of equalizer is of high impedance and is designed for insertion into an audio amplifier between a triode plate and subsequent grid, or from a high impedance source (5000 to 30,000 ohms) other than a crystal microphone, to a subsequent grid loaded with 10,000 ohms.

Some insertion loss is effected by this equalizer, particularly at the maximum setting. If the amplifier system does not have excessive gain an additional audio stage may be required. As the filament and plate drain of the added tube is small, it can normally be taken from the power supply of the original equipment.

Figs. 17-8 through 17-19 illustrate the various typical curves obtained with this equalizer with the setting at maximum value.

To permit equalization for a wide variety of applications, the high frequency and low frequency boost sections are arranged for two frequencies each. In most applications the frequency desired is predetermined, and when the unit is wired into the equipment, the appropriate connections are employed.

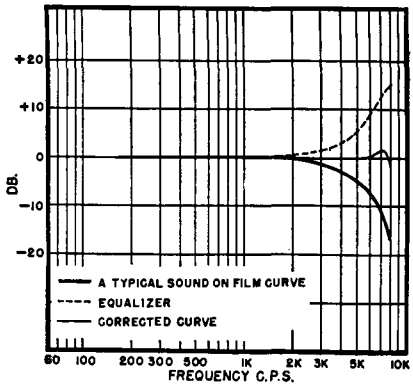

Fig. 17-15.

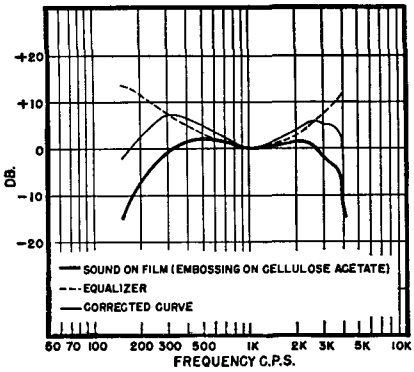

Fig. 17-16.

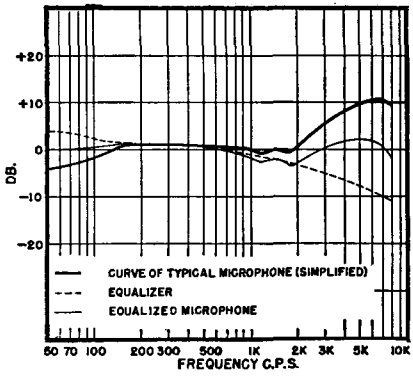

Fig. 17-17.

If a wide range of use is anticipated, the 50 cycle and 100 cycle terminals can be brought out to a single-pole, double-throw switch, and in like manner, the 5 kc terminals to a similar

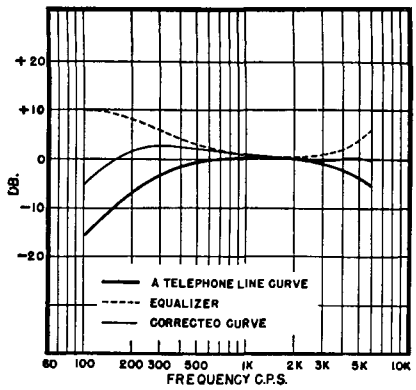

Fig. 17-18.

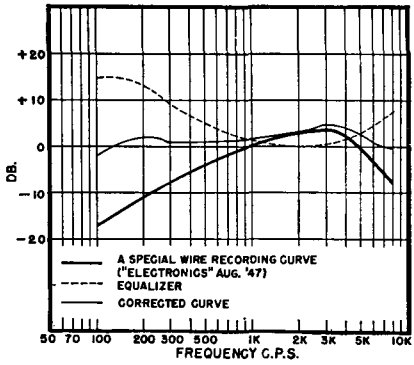

Fig. 17-19.

switch, thus permitting instantaneous changeover to the desired resonant frequency.

The following considerations should be observed in order to take full advantage of the possibilities of the equalizer:

1. The unit is designed to work between two impedances of 10,000 ohms, and this value of termination must be used to maintain accuracy of calibration.

2. No distortion is introduced if the maximum level at the equalizer input is held below 2 volts, with negligible distortion at several times this value. The unit should not be used at signal levels above 10 volts.

3. When adding this type of resonant equalizer to an amplifier with very little reserve voltage gain, a preampli-

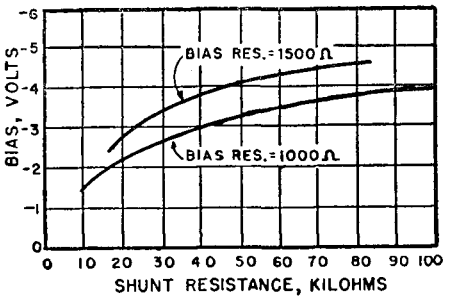

Fig. 17-20. Variation of bias with shunt resistance for phase-inverter of Fig. 17-23.

fier such as cascaded triodes will result in an output voltage essentially equal to the input voltage when both maximum bass and treble boost are used.

4. When an amplifier incorporating the CGE-1 is run with no boost, the mid-frequency gain is 30 decibels over that with full boost. For best signal-to-noise ratio under these conditions, a master gain control should be used in the circuit after the equalizer itself.

The Degenerative Tone Control

The degenerative type of tone control has enjoyed rather widespread use in audio amplifiers.[1] It has the particular advantage that only a single tube is required to accomplish both bass and treble boost and cut; this results in reduction of total amplifier stages to a minimum and simplifies the power-supply requirements when compared to other more complex controls.

On the other hand, as usually designed, the tone control makes use of an iron-core choke which is considered undesirable by many designers. Furthermore, when utilized in certain ways a parallel-resonant arrangement is introduced into the circuit and this, in the opinion of a large number of engineers, is to be avoided at almost any cost.

The usual objection to the use of an iron core choke coil for tone control is the possibility of hum pickup. With modern, well-shielded chokes available for this purpose, this is not a valid objection, and the hum introduced by the choke is negligible.

The basis of the degenerative tone control is the simple plate-and-cathode loaded phase inverter, incorporated in the circuit of Fig. 17-23. As is generally known, if R_1 and R_2 are equal the signal voltages at points A and B will also be equal but of opposite sign. The output is taken from point A and, in principle, a bass cut is attained by shunting this output with a suitable choke while a bass boost results if the cathode resistor is shunted. By substituting a condenser for the choke, the treble is similarly controlled. The maximum amount of cut in either case is 6 db per octave but the maximum boost depends upon the amplication factor of the tube. With a low-mu triode like the 6J5, which is customarily used, a boost of about 5 db per octave is the most that can be realized.

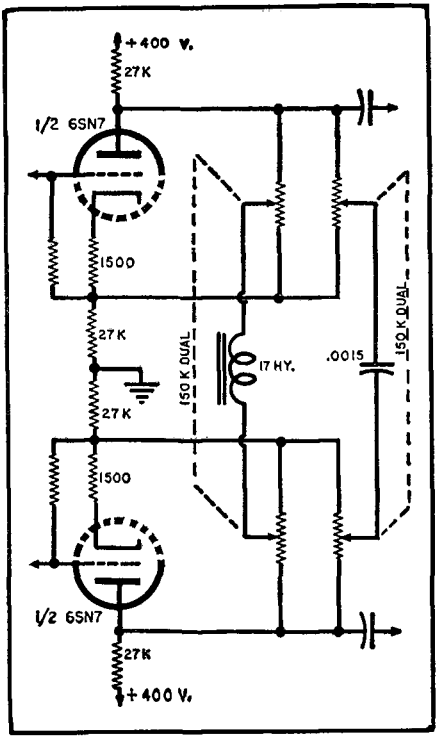

Fig. 17-21. Push-pull tone control circuit.

[1]Boegli, Charles P. "The Degenerative Tone Control," Radio and Television News, June 1951.

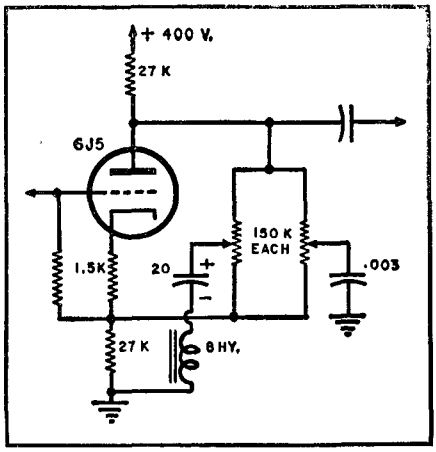

Fig. 17-22. Single-ended tone control circuit.

The first step in the design of the stage is thus simply the choice of component values for a suitable phase inverter. By way of example, a 6J5 will be assumed with a plate-supply voltage of 400, under which circumstances R_1 and R_2 may be 27,000 ohms each and the bias resistor may be 1000 ohms. The bypass is omitted from the cathode bias resistor with little effect.

The bass turnover frequency (the frequency at which bass boost or cut begins to become effective) and the treble turnover frequency may be independently specified. In the case of bass and treble cuts, the choke and condenser are shunted across the output resistance of the stage, which is substantially equal to R_1. Bass cut becomes effective when the reactance of the choke equals R_1; hence, if a 500 cps turnover is chosen with $R_1 = 27{,}000$ ohms, an 8.5 henry choke will be required. In a similar manner if treble cut is to begin at 2000 cps, an .003 μfd condenser will be needed. Boosts become effective at approximately the same frequencies because the cathode resistor is the same size as the plate resistor. The condenser and choke together in the above case resonate at 1000 cps, so that when maximum bass and treble cut are both employed, a 1000 cps parallel-resonant circuit is shunting the output.

In order to introduce each of these shunts independently to either the plate or cathode portion of the circuit, two controls must be used. There is more than one way to connect each control into the circuit, but the simplest method seems to be to attach one end directly to point A and the other to point B (Fig. 17-23). Since two controls are used, the tube then operates with a dc shunt equal to the parallel resistance of the two controls. This shunt naturally affects the bias voltage and some adjustment in the size of the bias resistor is necessary to

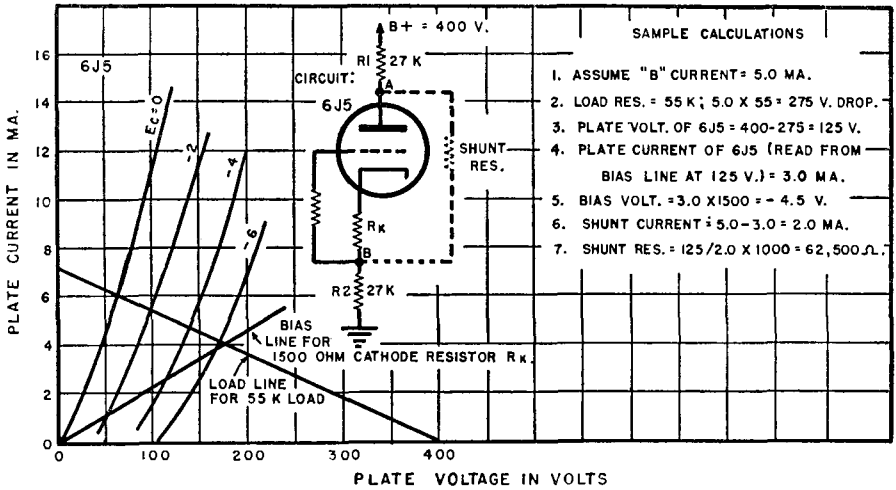

Fig. 17-23. Calculations used in the design of the shunted phase-inverter.

permit the shunted tube to handle the same signal voltage as an unshunted one. It would, of course, be possible to use a control of very high resistance, say, five megohms, in which case the effect on the dc voltages would be negligible. As the resistance of the control is increased, however, the region in which the control action takes effect becomes confined more and more to the ends of the rotation of the knob; with a five megohm control the entire boost or cut action occurs within a few degrees of the ends of this rotation, which effect is decidedly undesirable. It has for this reason been found preferable to choose a value equal to about five times the plate resistor of the inverter—in this case, around 100,000 or 150,000 ohms.

The dc voltages in a shunted-triode plate-and-cathode loaded phase inverter can easily be calculated, and the simplest method for finding the required bias resistor seems to be to assume a series of values of "B" supply currents, from which the voltage drop through the load resistors and hence the effective plate-cathode voltage across the tube can be found. With this voltage and a bias line drawn for a given bias resistor on the tube characteristics chart, the tube plate current and effective bias can be located. By subtracting this plate current from the assumed "B" supply current, the current flowing through the shunt is immediately found, and the tube plate-cathode voltage divided by this current equals the size of the shunt required to bring about the assumed operating conditions. Fig. 17-23 illustrates the method of calculation just described.

This procedure must be repeated for several assumed values of bias resistor, and the results plotted as shown in Fig. 17-20, which applies to the circuit used as an example in this problem. From this chart, it is evident that with 150,000 ohm controls, which impose a 75,000 ohm shunt across the tube, a bias resistor of 1500 ohms results in a grid bias approximately the same as that for an unshunted tube with a 1000 ohm bias resistor.

Since the signal voltages occurring at each end of the controls are equal in magnitude but opposite in sign, the center point of each control is effectively at ground ac potential even though no grounded center tap is provided. If the center point of the knob rotation is to correspond to flat response equal resistance must be provided each side of this center, which usually indicates the use of linear-taper potentiometers. Fader types have been tried but found to be unsatisfactory for this circuit. To obtain the control action the slider of the bass control is grounded through the choke whose size was previously calculated, and the other slider is connected to ground by means of the condenser.

In a single-ended stage (Fig. 17-22) the dc must be prevented from flowing through the choke to ground. This requires a very large blocking condenser because the series resonance of the choke and blocking condenser must occur below the lowest frequency to be amplified. Electrolytic condensers are usually used in consideration of space requirements. A push-pull stage (Fig. 17-21) has the advantage of eliminating this blocking condenser and in addition, as usual, leads to reduced distortion in the amplifier output and permits some simplification in the power supply.

The last step in the design is to assign values to the tube grid resistor and the input coupling condenser. This is complicated by the fact that the input resistance at low frequencies decreases when bass boost is employed, and this decreasing input resistance acts in combination with the coupling condenser to reduce the bass response. For example, if a grid resistor of 100,000 ohms is used with a .01 μfd coupling condenser the bass response will be down 3 db at 16 cps with the bass control set for flat response, but at maximum boost the 3 db point will be at 160 cps. This undesirable effect can be eliminated only by making the bass response extend to the proper frequency at maximum boost; in other words, the combination of grid resistor and coupling condenser should be chosen for the desired bass response under the assumption that the stage input resistance is equal in magnitude to the grid resistor. Since at flat response the gain of the

stage is slightly less than unity, motorboating will not occur, but at an intermediate bass-boost setting low-frequency oscillation does sometimes take place. It can be avoided by careful decoupling and control of the bass response of the preceding and succeeding amplifier stages. No such difficulty with oscillation is experienced with the push-pull circuit.

The cathode of the tone-control tube is at a high dc potential above ground. This makes a separate heater supply essential in some cases, but this arrangement is at any rate always desirable because hum is considerably reduced.

Because the push-pull arrangement is least likely to introduce distortion and since it also eliminates the problem of the large condenser required to prevent current flow through the choke, it was selected for the tests. The choke was a *U.T.C.* VIC-17 reactor, which could be adjusted to the desired inductance, and when this was done the frequency response was substantially as expected, Fig. 17-24. The use of 150,000 ohm controls resulted in a smooth control action over most of the rotation of the knob.

When connected to an oscilloscope, the output appeared to be distortionless as long as the input was maintained at less than that permitted by the bias voltage of the control tubes. When the controls are in flat position the circuit will handle at least ten times this permissible input without distortion, because of degenerative action. Distortion due to overloading is, therefore, most apt to occur at low or high frequencies when bass and treble boost are on full.

The apparent fact that the resonant circuit introduces no transient distortion at mid-frequencies (1000 cps) may perhaps be explained by noting that at these frequencies its impedance is higher than the plate or cathode resistance of the tube and the resonant circuit is consequently of little effect there. With the controls in "flat" position, of course, the resonant combination is effectively removed from the circuit and has no effect whatsoever.

The measured gain of the stage is .88. The hum level of the output is very low, less than that of the power supply used for the experimental work. It is nevertheless desirable to keep the signal voltages in such stages at reasonably high levels to override the various sources of noise. With an input of two or three volts peak to the stage, the noise is negligible.

The degenerative tone control serves the quadruple purpose of boosting or

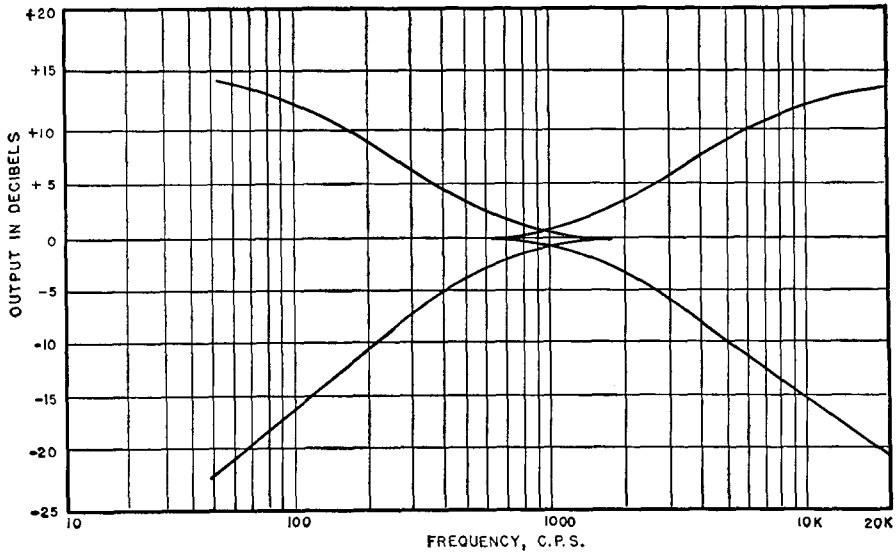

Fig. 17-24. Frequency response curves for the degenerative tone control discussed in text.

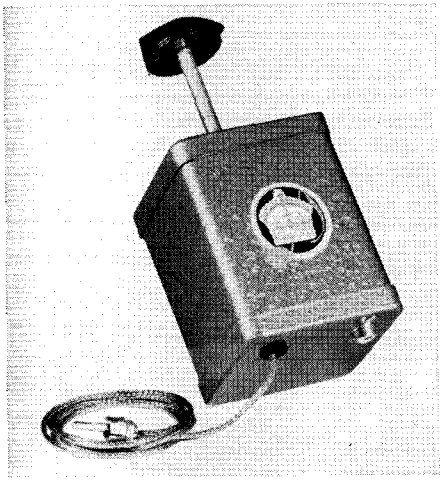

Fig. 17-25. Goodell NSF-2 noise suppression filter. (Courtesy Minnesota Electronics Corp.)

cutting bass or treble frequencies with a simplicity unmatched by any other arrangement. In the past the most serious objection raised against its use has been the possibility of introduction of distortion by the iron-core choke and the resonant circuit. This distortion, however, appears to be extremely small and since most other tone-control arrangements use two cascaded stages it seems that at best there is little difference from the distortion standpoint. On the other hand there are two more valid objections to the degenerative tone control; the first is that the high cathode voltage necessitates a separate heater winding and the second is the possibility of noise in the output.

The first objection is hardly a basis for rejection of the circuit since a separate heater transformer is readily supplied. With regard to the second, however, it appears that the tone control shares the same shortcomings as the plate-and-cathode loaded phase inverter, namely, the noise level is higher than that of an ordinary triode stage. For this reason it is desirable that the circuit be incorporated into an amplifier where the peak signal voltages are moderately high—on the order of two or three volts.

The gain of the stage is so near to unity that the tone control is easily incorporated into existing amplifiers without extensive changes in other parts of the circuit. Thorough decoupling of the

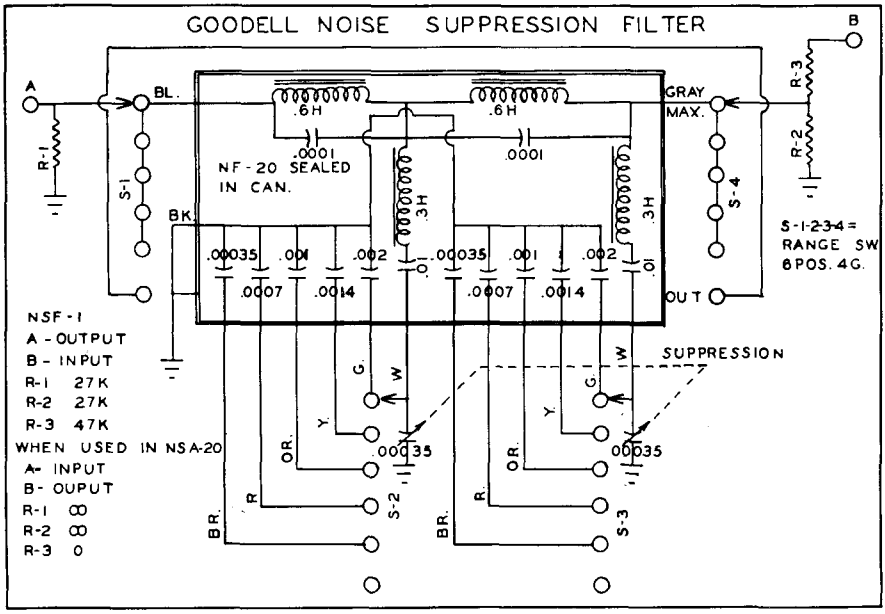

Fig. 17-26. Schematic of the NSF-2 noise suppression filter.

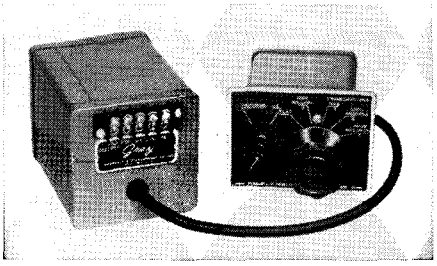

Fig. 17-27. The *Gray* Model 603 equalizer. (Courtesy Gray Research)

"B" supply is about the only stringent requirement.

Finally, not the least of the advantages of this circuit is the ease with which it may be designed for any required bass and treble turnover points and the fact that the controls themselves are commercially available from a number of sources. It appears, therefore, that this circuit is an excellent choice for incorporation into new or existing equipment, including that intended for high-fidelity use.

Noise Suppression Filter

This *Goodell* NSF-2 (Fig. 17-25) unit is very simply installed by plugging the output of the pickup cartridge directly into the small jack on the filter. The output of the filter is a cable fitted with a plug which should be connected to the input of the preamplifier.

When the switch is in the extreme counter clockwise position, the filter is switched entirely out of the circuit and there is no suppression. As the switch is rotated successively through its several positions (Fig. 17-26) clockwise, there will be increased suppression of background noise in the high frequency region. For average shellac commercial records, position three will usually be found most satisfactory and will attenuate very little, if any, of the music signal while effecting a great reduction in surface noise. For good plastic records and the best quality of shellac records, position two will be satisfactory in most installations. Where the background noise is serious or where there is excessive high frequency distortion on the record, it will be desirable to use positions four or five, even though these positions may result in a slight reduction of brilliance at the very high frequency end.

The shielded cable from the pickup cartridge to the input of the filter should be kept as short as is conveniently possible. If the filter is placed in a location such that the length of lead supplied with the unit for connection to the preamplifier input can be appreciably shortened, it is desirable to do so rather than let it hang loosely in order to minimize possibilities of hum pickup from associated wiring. The components in this unit are mounted in a double shield can and there is very little possibility of hum pickup within the filter structures. Consequently the unit may be placed in the most convenient physical location in most installations without regard for electrical and magnetic field considerations. However, it is always best not to run input devices any closer to power transformers, motors, etc., than is necessary for convenient installation.

Gray Record Equalizer

The *Gray* Model No. 603 Equalizer, Fig. 17-27, has been designed to complement recording characteristics of instantaneous lacquers, commercial wide groove records, transcriptions and micro-groove records when played back with *G.E.* RPX-046 Professional series or *Pickering* No. 120 and No. 140 type S or M Cartridges. A choice of 5 conditions of equalization is provided.

The equalizer is housed in two metal cans containing switching and components interconnected by 18″ shielded cable.

Specifications

Circuit—Four terminal network isolated from ground, used with balanced or unbalanced line. One input terminal common to one output terminal, marked "COM," isolated from can and cable shield "SH" terminal.

Compensation Means—Reactive and resistance elements of close tolerances

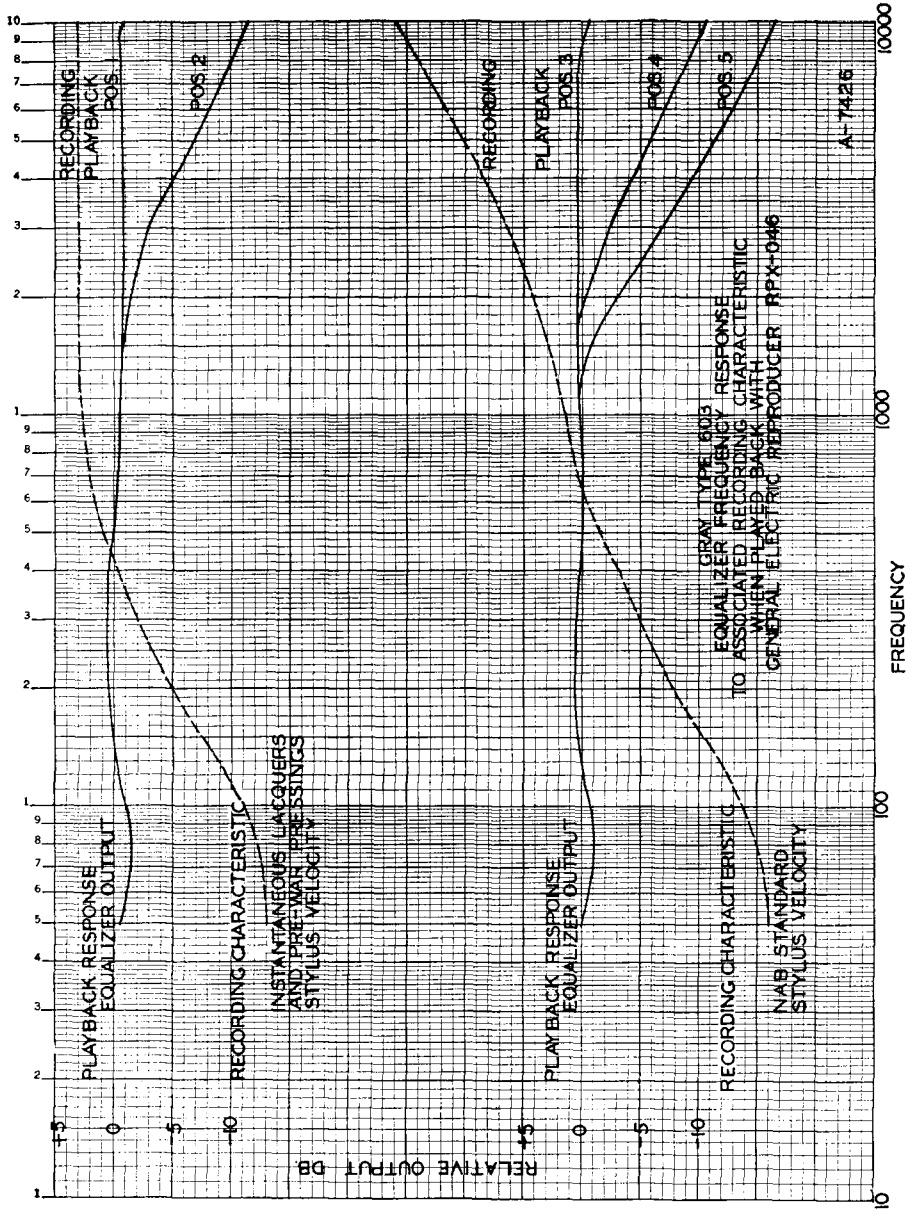

Fig. 17-28. Frequency response curves when used with *G.E.* RPX-046 cartridge.

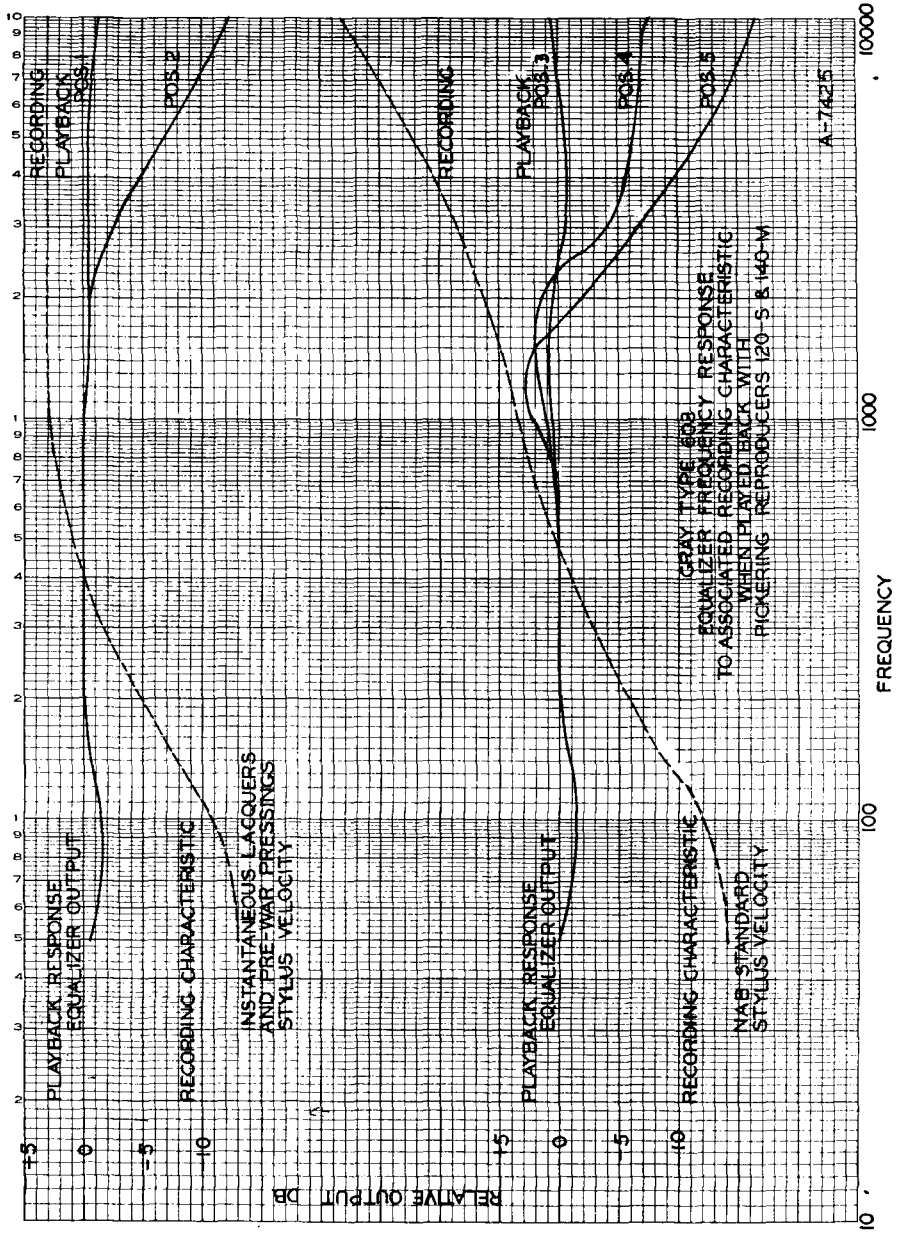

Fig. 17-29. Frequency response when played back with *Pickering* 120-S and 140-M cartridges.

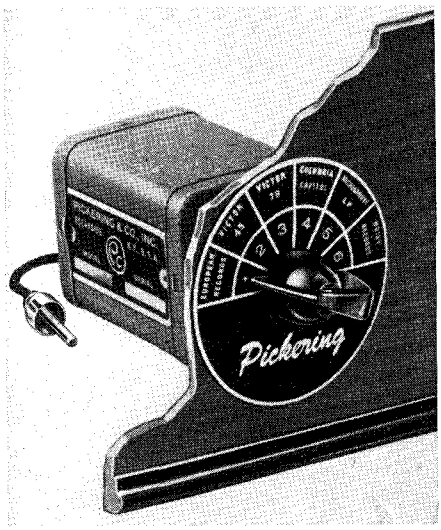

Fig. 17-30. The *Pickering* 132E record compensator. (Courtesy Pickering & Co.)

connected across cartridge. Equalizing networks utilize cartridge impedance as part of compensating networks.

Input Impedance—Function of frequency as well as switch setting due to type of network used. Example: On *G.E.* Position No. 1, about 600 ohms at 50 cps, falls to about 160 ohms at 400 cps, rises to about 2000 ohms at 10 kc. See Fig. 17-28.

Output Impedance—Designed to work into pre-amplifier intended to be operated from 150 or 250 ohm mike source. In generally accepted broadcast practice, such pre-amplifier is essentially unloaded on tube side. Working equalizer into higher than nominal impedance, little effect on frequency response or output level. Somewhat lower impedance reduces general level

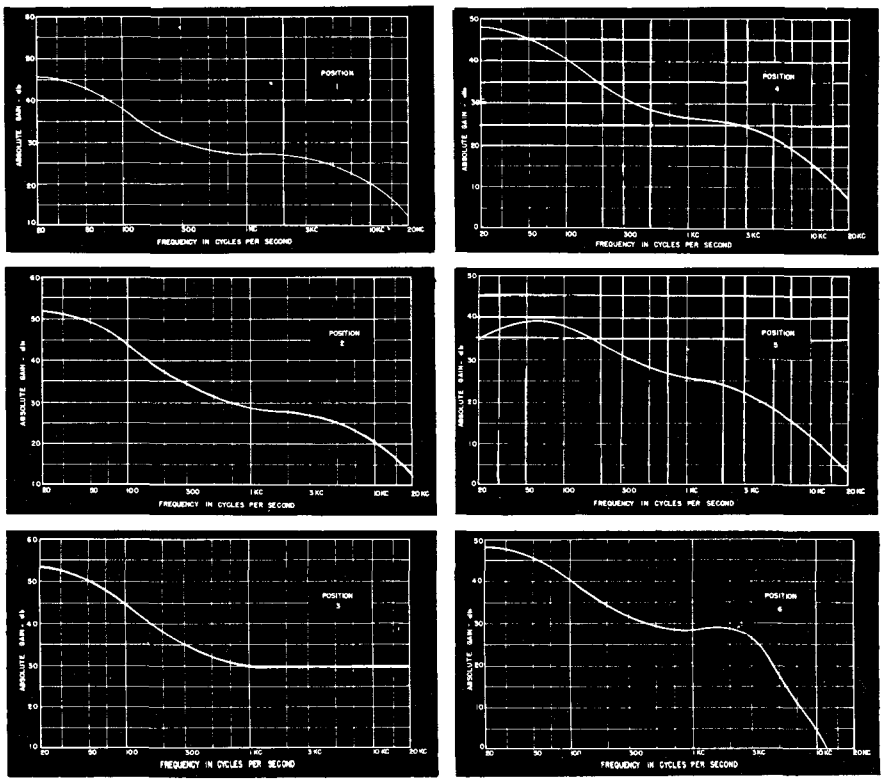

Fig. 17-31. Frequency response curves Model 132E, record compensator with *Pickering* Model 130H pre-amplifier equivalent.

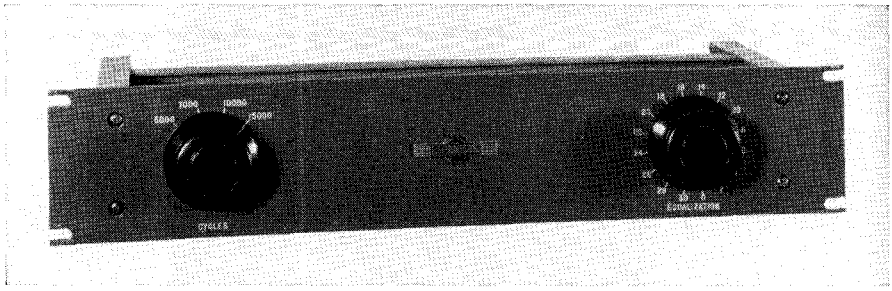

Fig. 17-32. *Collins* 116E-3 program equalizer. (Courtesy Collins)

slightly, several db more at higher frequencies.

Insertion Loss—Defined as function of source, input, output and load impedances. Since first two vary with frequency and input impedance varies with switch setting, a single figure cannot be given. See *Output Level.*

Output Level—With switch on Position No. 1, measured across 250 ohm equalizer output terminals, average *G.E.* RPX-046 cartridge driven at 4.7 cm per sec., level approximately -64 dbm. With *Pickering* 120 or 140 type S or M, level approximately -50 dbm. Columbia 10003-M record 1000 cycle band is approximately this velocity at 78 rpm. Above 1000 cps, setting of compensation switch affects these values.

Cartridge Selection—Two position rotary switch selects proper equalization circuits for cartridge type indicated. Single input termination for one cartridge at a time.

Frequency Control—5 position selector switch for choice of 5 different compensations:

Position No. 1—Flat playback to recordings made without high frequency pre-emphasis, such as instantaneous lacquers or pre-war pressings.

Position No. 2—Moderate roll-off for such records when worn.

Position No. 3—Complements NARTB recording characteristics.
May also be used for additional roll-off for worn lacquers.

Position No. 4 and No. 5—Successively increased roll-off for NARTB recordings to reduce abnormal surface noise.

For curves—See Figs. 17-28 and 17-29.

Cartridge Characteristics — Equalizer design based on *G.E.* cartridge inductance of 250 mh and dc resistance 220 ohms and *Pickering* inductance of 200 mh dc resistance 580 ohms. Variation of ± 20% of inductance and/or resist-

Fig. 17-33. *Collins* 116E-4 program equalizer. (Courtesy Collins)

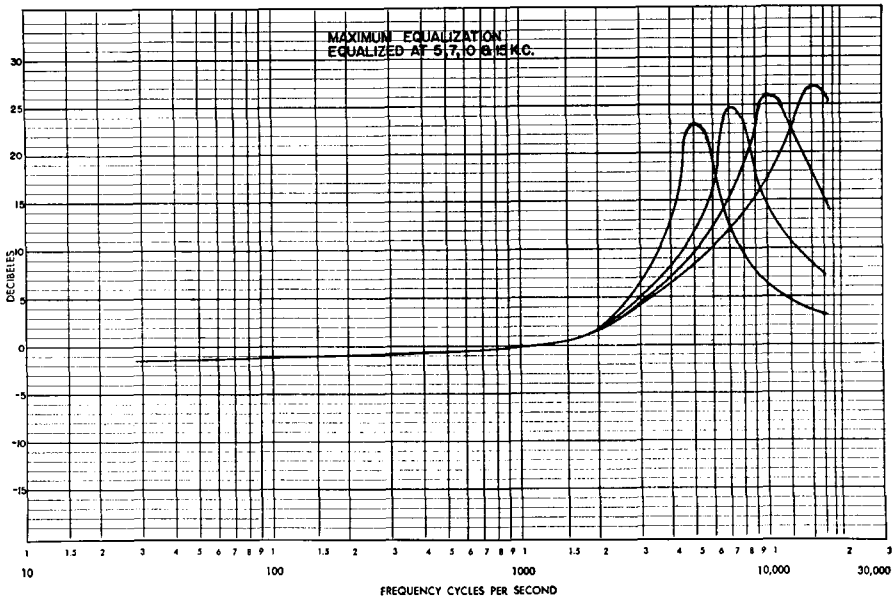

Fig. 17-34. Equalized characteristics of the high-frequency equalizer.

ance from these values has negligible effect. Increase in cartridge inductance of the order of 100% will reduce output above about four hundred cycles by several db. Increase in cartridge resistance of the order of 100% reduces output in region of 100 to 400 cycles several db with negligible effect above 1500 cycles.

Pickering Record Compensator

The *Pickering* 132E Record Compensator, Fig. 17-30, permits proper equalization of the amplifier system to produce optimum reproduction of individual records; because all linear circuit elements are used it has no inherent distortion. Its six positions correctly equalize for all of the established recording characteristics including micro-groove and standard records, domestic and foreign. See Fig. 17-31.

Specifications

Output Level—To feed into high-gain amplifier which has 6 db per octave rise below 500 cycles per second.

Installation—Unit can be mounted in any position (on panels up to ½″ thick) by means of threaded bushing. Switch shaft is 1⅝″ long and can be cut to any desired length. Since no power is required to operate the Record Compensator only a single connection has to be made to a suitable preamplifier. Input connection—standard socket. Matching plug furnished with unit. Maximum distance between record compensator and preamplifier input 20 inches, cable supplied.

Dimensions and Weight—Size of unit: 1⅞ x 2″ by 2½″ overall, less switch shaft. Weight: 6½ oz.

Program Equalizers

The *Collins* 116E-3 (Fig. 17-32) and 116E-4 (Fig. 17-33) equalizers are especially suited for stations having a variety of remote programs coming from different lines. The 116E-3 and -4 offer equalization in the high frequency ranges only. A calibrated attenuator selects the amount of equalization at the required frequency which is selected by a panel switch. Such calibration reduces line equalization time to a single run to find the line characteristics, and adjustment of the equalizer to the conjugate frequency characteristic.

Fig. 17-35. *Collins* 116F-1 program equolizer. (Courtesy Collins)

The 116E-3 is a single high frequency equalizer while the 116E-4 has two identical high frequency equalizers mounted on the same panel with separate input and output terminals.

116E-3 Equalizer Specifications

Input and output impedance—600 ohms unbalanced.
Equalization frequencies—5, 7, 10 and 15 kc.
Maximum boost—Approximately 30 db.
Insertion loss—Approximately equal to amount of equalization used.
Frequency range—30 to 15,000 cps.
Dimensions—19" w, 3½" h, 7¼" d.
Weight—6 pounds, 7 ounces.
Finish—Metallic gray panel; flat gray back.
Collins Part No.—520 3577 00.

116E-4 Equalizer Specifications

Input and output impedance—600 ohms unbalanced.

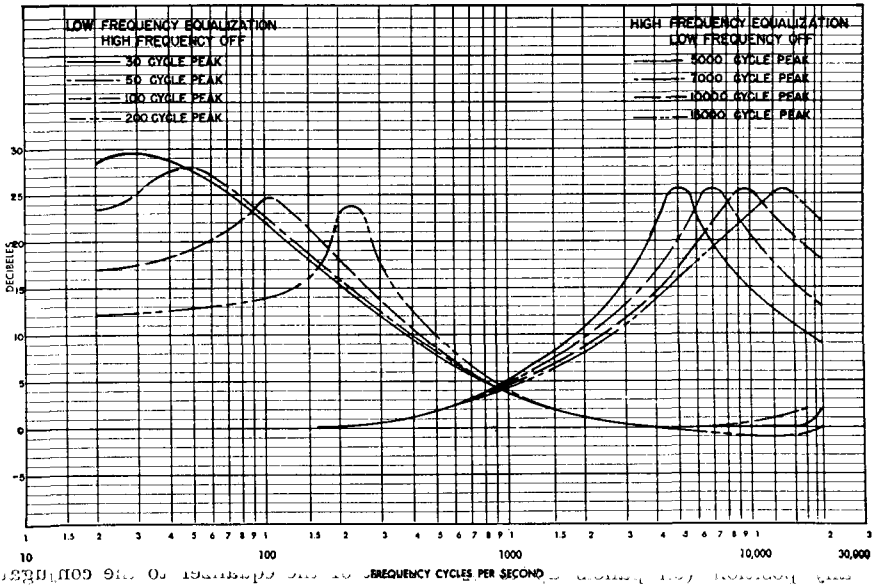

Fig. 17-36. Performance curves of the *Collins* 116F-1 program equalizer.

Equalization frequencies—5, 7, 10 and 15 kc. (Fig. 17-34).
Maximum boost—Approximately 30 db each channel.
Insertion loss—Approximately equal to amount of equalization used.
Frequency range—30 to 15,000 cps.
Dimensions—19" w, 3½" h, 8¼" d.
Weight—9 pounds, 7 ounces.
Finish—Metallic gray.
Collins Part No.—520 3578 00.

Low-High Program Equalizers

The *Collins* 116F-1 Equalizer (Fig. 17-35) provides complete facilities for controlling the frequency response of program and communication circuits. As these units have an insertion loss of approximately 30 db, the *Collins* 6R Isolation Amplifier used in conjunction with the equalizers will provide a means of bringing the level back to normal, plus a little gain if desired.

Specifications

Input and output impedance—600 ohms, unbalanced.
Equalization frequencies—30, 50, 100 or 200 cps at low frequency. 5, 7, 10 or 15 kc at high frequency. (See Fig. 17-36.)
Maximum boost—26 db, in steps of 2 db each. High and low frequency equalization independently adjustable.
Insertion loss—30 db at unequalized frequency.
Frequency range—30-15,000 cps.
Dimensions—19" w, 5½" h, 7½" d.
Weight—15 pounds.
Finish—Metallic gray.
Collins Part No.—520 2893 00.

CHAPTER 18

Attenuators and Mixers

An Analysis of various controls used in audio amplifiers, recording equipment and in broadcast amplifiers.

Input Coupling Methods

● Many amplifiers on the market today, particularly the "run of the mill" variety, employ for their input systems attenuators of simplified design. Several of these are illustrated in Fig. 18-1. Reference to Fig. 18-1A shows the simplest type of coupling to a single grid from a single input source. This is a conventional voltage divider circuit.

In Fig. 18-1B we note a series resistor between the volume control slider and the grid. This affords a bit of isolation, as we shall see becomes necessary as in E.

Fig. 18-1C illustrates a simple mixing circuit for two inputs when it is desired to feed into a single grid. The potentiometer winding has a center tap which is grounded.

Fig. 18-1D shows two input sources, connected in parallel, across two potentiometers, feeding one grid. This circuit is not to be recommended as one control can short out the other input.

Fig. 18-1E is a dual version of that shown in B, isolating resistors are required in order to prevent the shorting action as would occur in D.

Fig. 18-1F illustrates a preferred technique whereby two input sources are fed to two grids of two different tubes, the plates of which are connected in parallel.

Fig. 18-1G is the same only here we find that a dual tube, such as a 6SN7 is employed using independent grids and the two plates are connected in parallel.

The above are simplified forms of mixer controls, found in conventional equipment. When designing circuits, attenuators and mixers for broadcast applications special types of controls or attenuators are required in order to maintain a constant impedance load throughout the range of the control.

Attenuators for Recording and Broadcast

Studio installations of speech input equipment almost invariably use ladders (Fig. 18-2C) or bridged T. (Fig. 18-3B) attenuators as the mixing and volume level controls in their equipment. A potentiometer 18-2A is sometimes used where the cost factor must be considered. Usually this is used as a master gain control, but only where the entire speech equipment is built as a unit incorporating amplifiers and mixing equipment in one housing. This is done to avoid long high impedance leads and the attendant danger of hum pickup. It should be noted that changing the characteristic impedance of a sound channel is often necessary, particularly in test installations where a

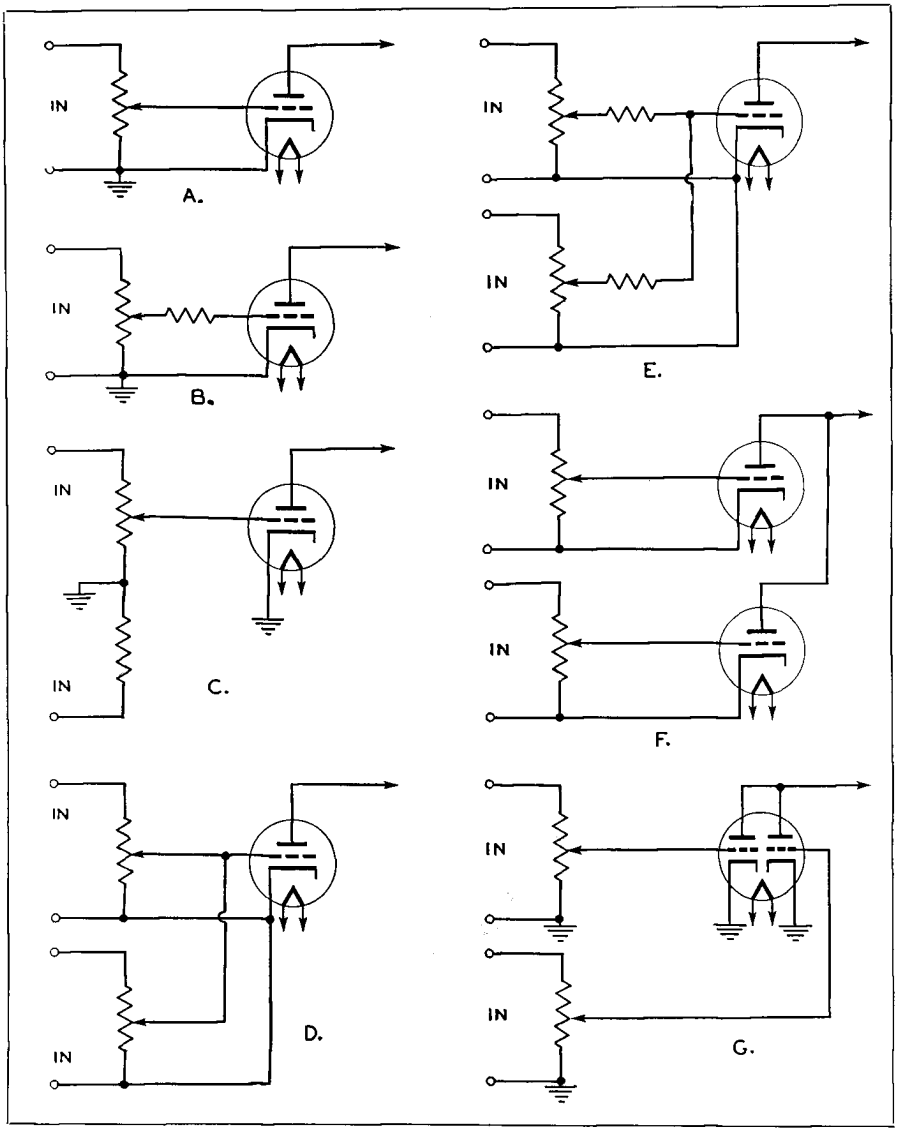

Fig. 18-1. High impedance circuits for general uses. Representative controls of the potentiometer variety.

special type of attenuator is available for the purpose. This offers either the minimum loss for the ratio of impedances matched, or a constant loss for any ratio selected.

Public Address Attenuators

Installations of any form of public address equipment (PA) for sound reinforcement, present the problem of control of level from individual or groups of loudspeakers where a single amplifier feeds more than one transducer.

The power attenuator can be used to control the sound level delivered without altering the volume from the remaining speakers connected to the same power amplifier source. As a control must dissipate power, its size and se-

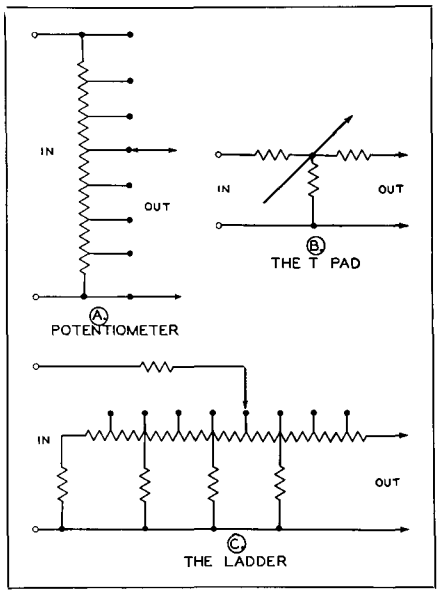

Fig. 18-2.

lection depends upon the level at which the loudspeaker is designed to work. Frequently these devices for group control assume large physical dimensions, and in such cases it is well to observe that the power rating of such devices is based upon sine waveform for speech and music. This will allow a slight overloading of the control with safety. However, not more than 25% overload can be tolerated unless it is for very short periods of time, otherwise the life of the attenuator will be endangered.

Attenuators can generally be used to achieve tone compensation where they are merely elements of a complex correcting circuit as in the familiar equalizing units offered in the familiar trade and discussed in other chapters. A tone-compensated ladder is shown in Fig. 18-3A. In the recording process, particularly at 33⅓ rpm used in making transcriptions, there must be considerable equalization as the recording radius is reduced. Attenuators lend themselves nicely to this function and can be ac-

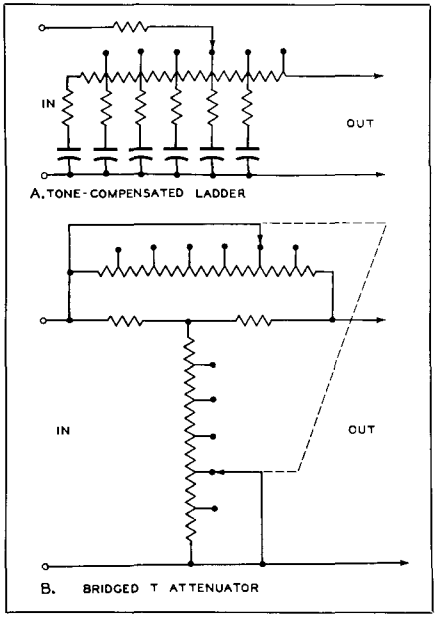

Fig. 18-3A, B.

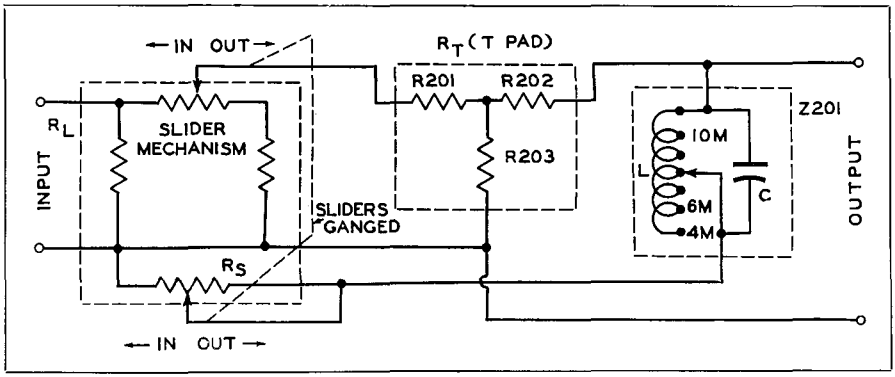

Fig. 18-3C. Simplified diagram of the Presto automatic equalizer.

tuated by the recording lead screw mechanism or manipulated separately at the discretion of the recording engineer. When attached to the recorder, they take the form of sliding units or those with an arc movement which are operated through a mechanical linkage to the traveling recording head. See Fig. 18-3C.

Another use for attenuators is the application in circuits measuring volume level, as discussed in the chapter under "Decibels." The familiar decibel meter which is a rectifier type of volt meter has long been used in all sound installations and is still widely used in laboratory and recording studios. Where it is necessary to terminate the measured circuit in its characteristic impedance, the meter can be connected to a T pad across the line, thus serving to adjust the range of the meter. The accuracy of measurement is determined by the accuracy of calibration of the resistance built into these meter multipliers. Representative values for such resistances are included in the appendix.

Several years ago the broadcasters cooperated in developing a standard measuring instrument "the VU meter" which today is universally used in that industry. These meters possess specific desirable ballistic characteristics and they read an audio level of plus 4 dbm which is the reference level at 1 mw at 600 ohms impedance (Z). This is equivalent to the zero reading on the VU meter scale. This type of resistance or multiplier circuit takes the form of a pure T pad so that the characteristics of the meter are not changed nor any inordinate loss imposed upon the audio line being measured. A small attenuator in the form of a rheostat is incorporated in these circuits wherever it is necessary to standardize many instruments throughout a broadcasting network to read alike. See Chapter 8.

Fixed Attenuators and Pads

There is a vast field of applications for fixed attenuators or fixed pads. In mixing circuits several incoming signals are frequently not of identical level, and any great discrepancy can be compensated for by a "fixed pad" of suitable circuit configuration to match the general schematic of the mixer. This may be balanced or unbalanced to ground. When two amplifiers are coupled together at low impedance, good engineering practice dictates that at least 6 decibels of loss in the form of a fixed attenuator should be included in the circuit between the two connected transformer windings. This will eliminate circulating audio currents. Multiple end use of a single source of sound energy (feeding both an AM and FM transmitter, or driving many power amplifiers in the sound system) calls for the use of a dividing network. Fixed "loss pads" for 500 Ω lines (10 db) are shown in Fig. 18-4.

This is a form of fixed attenuator offering a small loss between the source and its respective loads, but simultaneously presenting considerable separation between the several loads. Inverted, the same pad becomes a combining network for assembling several sources into one load. Usually these pads are designed to present a uniform impedance to all terminals and assume several complicated circuit configurations.

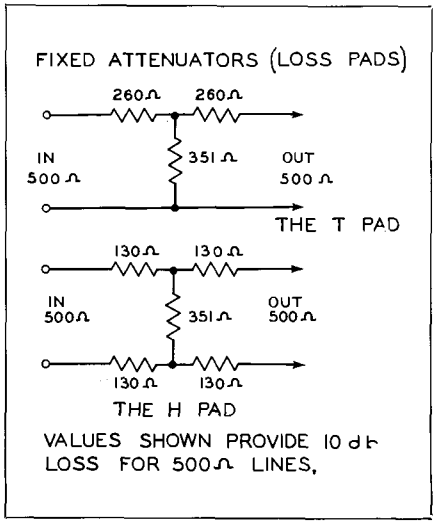

Fig. 18-4.

However, they are all examples of attenuators. When connecting a bridging amplifier across a properly terminated junction of source and load, a bridging pad can be used, if the second amplifier does not possess a bridging transformer.

Classifications

Modern attenuators can be grouped into four main classes. Of these, two classes are variations of each other. These are the ladder, T, bridged T and potentiometer. Figs. 18-2 and 18-3B show the electrical differences of these units. The ladder, Fig. 18-2C has but one row of contacts and a moving arm. It is easy to operate and possesses smooth motion. Furthermore it is electrically quiet and relatively low in cost.

This device offers an insertion loss of about 6 db and this means cutting in half the gain of the source signal and additional amplification is therefore required. If the impedance ratio of the ladder can be made 1:2, then the insertion loss becomes 2 db. This change in impedance ratio is also an undesirable factor. A special case of zero insertion loss ladder has been made, but it is costly and mechanically complex therefore it is not met with wide commercial acceptance.

The T Pad

The T pad of Fig. 18-2B requires two or three sets of contacts. The ladder is for the pure T, and no collector rings are used. While it is possibly a bit harder to rotate, the advantages of a zero insertion loss and smoother impedance characteristics favor the selection of this form of control. The bridged T, offers smoother over-all impedance characteristics when the brush shunts a pair of contacts and requires fewer resistors in its construction.

Potentiometers

A potentiometer, as its name implies, is a voltage measuring device and is usually found in high impedance installations, such as are illustrated in Fig. 18-1. Similar to the ladder in physical appearance Fig. 18-2A, these units can be made economically. The load side of the potentiometer offers a varying impedance and unless this can be accepted, its compensated form must be used. However, any type of compensation presents serious frequency discrimination, even at audio frequencies, due to the series resistors and the attendant "Miller effect" in the grid circuit to which it is connected, see Fig. 18-5.

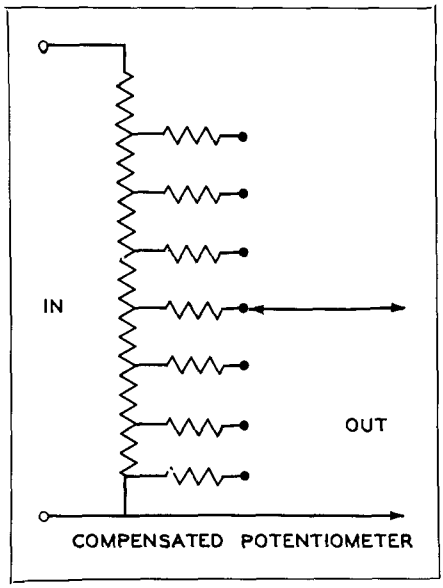

Fig. 18-5.

Mixer Circuits

Mixer circuits, at least up to a few years back, for broadcast were usually of the "low level" variety. Mixing took place right after the microphone and before any amplification had been inserted into the system. This was practical then, as most microphones were not of the highest fidelity. They possessed higher output than they do now and the noises introduced by the mixer were not so noticeable. With the acceptance and universal use of the wide range, high fidelity, low output microphone and transcription recorders, some form of preamplification became essen-

tial. Mixer circuits then were moved to a higher level position in the speech input installation and this is the generally accepted form used today.

Ladder Mixers

The ladder is almost universally used for low level mixing circuits because it tends to be quieter. An attenuator's noise along with the signal receives the effect of the full amplification of the system so consideration must be given to noise characteristics. The ladder is also used in "high level" mixing, where cost of components is a consideration and where ease of rotation is desirable. If the mixing installation is a large one, and the inclusion of ladder attenuators will tend to increase the loss of the mixer then bridged T pads are to be recommended. They are the better of the two for this service and frequently are used as master gain controls. Noise voltages introduced by the controls are smaller in high level mixing and with a suitable form of internal wiring, the noise can be made to decrease with the signal, as added loss is inserted in the circuit.

Linear Control

A linear control is just what its name implies. The loss it introduces is a linear function. It increases an identical amount for each step of rotation, thus the amount of loss inserted is uniform for each increment of motion of the knob and the total loss is as stated on the name plate of the unit by the manufacturer. Smooth opening and closing of a program is impossible if the control used has a loss of 40 decibels and the circuit has a sound level of about 60 decibels above the threshold of hearing. The first step will be up 20 decibels from silence, which is an undesirable condition. The tapered control on the other hand offers a uniformed amount of attenuation per step for approximately 70-75 percent of its travel and then increasing amounts for each extra step of attenuation.

Electrical smoothness of operation of the control circuit is thus afforded without any sudden jump from no signal to one of appreciable level. While tapered controls of only 20 steps are quite common, smoother control, especially on tones of long sustained duration is afforded by controls of 30 or more steps.

Master Controls

A master gain control has usually been selected from among the linear controls offered. In all recording installations where a most careful control of the sound level must be maintained to prevent overcutting into adjacent grooves, a master gain of 0.5 db per step is a prerequisite. For monitoring amplifiers and those used in PA work, a control as coarse as 3 db per step is allowable. For audiometric and laboratory work, the decade attenuator is selected with two bridged T pads connected in tandem to afford control of 1 db per step for a total of 110 db.

Mixers for Recording and Broadcast

Every source of signal must eventually reach a mixer if it is to be combined into an outgoing signal. It is not necessary to provide more mixing positions than is dictated by the number of signal sources generally used. Selector key switches, patch panels or some other means of switching is now incorporated into the speech input system, to facilitate selection of those programs which occur only occasionally if an inordinate number of programs sources must be handled. For a small broadcasting station a six channel mixer is adequate. About the most that could be handled would be about 7 channels. In such layouts they will handle two studios, two transcription machines, an announcer's booth (without calling upon the control operator to do any switching) and other inputs. In such small installations, four premixing amplifiers are generally used.

A small studio can get along well with a four channel mixer especially

if its use is confined to live programs or to a disc jockey show where the turntables can be wired into the mixer instead of requiring additional microphones. A single microphone will suffice for this type of program, leaving the remaining position for the use of the announcer's mike or a third turntable, reserved for transcribed spot announcement. Large studios are frequently equipped with as many as a dozen microphone channels. In such cases provision for two or three sub-master gain controls is also made. Wiring these into the master gain control is becoming standard practice and gives the mixing engineer added facility in the control of the open microphones.

Remote equipment of the portable type has been standardized at two and four channels. Nevertheless a single channel remote amplifier is useful in small stations for special events programs, especially when they cannot be rehearsed in advance or for emergency pickups. Here a single microphone is used by the announcer who frequently manipulates the gain as well.

Mixers for Recording Studios

Two general categories and their mixer system requirements divide similarly. Those studios making "off the air" checks of a radio program, proof of performance and reference can get along with only four channels. Frequently only two are used. However, when making master records the most flexible arrangement is necessary and there must be facilities comparable to those of large broadcasting studios. Exercising the finest possible control of sound is essential.

The loss per step of attenuation is usually never more than one decibel per mixer, and one-half decibel per step on the master gain control. There are two essential locations in the speech input system where a mixer can be employed. One is the installation in which the mixer immediately follows the signal sources, which is known as low level mixing and the other where some form of pre-amplification is used ahead of the attenuators, or known as high level mixing. No matter where the mixer is located, the insertion loss it presents to the over-all system remains the same. Modern attenuators are so well constructed that their noise level, due to thermal agitation, is well below that of the microphone and its associated premixing amplifier. In high level mixing, the noise of this combination also decreases with that of the signal as more attenuation is inserted into the system through manipulation of the attenuators. The dangers of hum pickup by the wiring and other random noise sources are added reasons which dictate that low level mixing should not be continued.

Constant Impedance Mixing

Here the impedance of the mixing system remains constant both with respect to the source and load between which it is connected and to the setting of the controls themselves. One exception will be discussed; the parallel type mixing circuit of reduced insertion loss. In this the output impedance is a function of the number of channels but is not adversely affected by the operation of the controls. This condition of constant impedance is an easy one to maintain in today's designs because the sources of signals are the output of pre-mixing amplifiers. All of these can be engineered for a standard impedance of 600 ohms.

Parallel Mixers

These are of two general types, those with constant input and output impedance and those where the output impedance changes when the number of channel changes, but whose insertion loss is less than the former type for the same facilities. In selecting a definite type of mixer it is well to bear in mind that possibly more channels may be added later and consequently one whose impedance remains constant is preferable. Fig. 18-6A shows the typi-

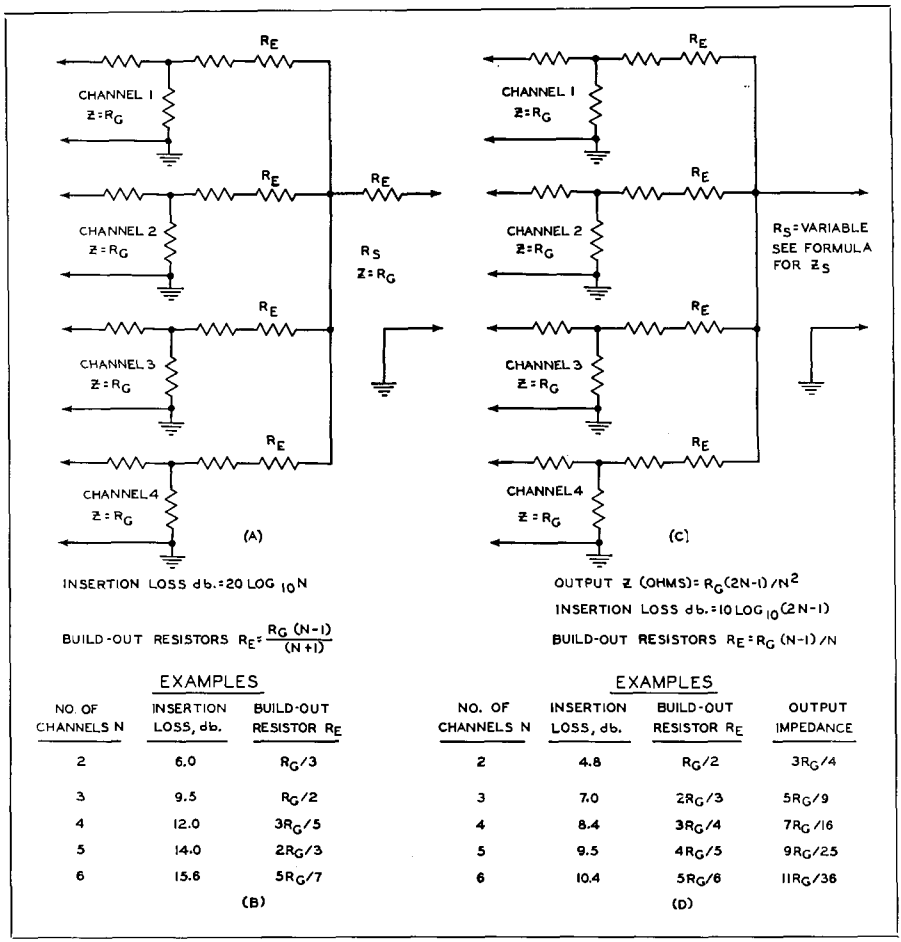

EXAMPLES

NO. OF CHANNELS N	INSERTION LOSS, db.	BUILD-OUT RESISTOR R_E
2	6.0	$R_G/3$
3	9.5	$R_G/2$
4	12.0	$3R_G/5$
5	14.0	$2R_G/3$
6	15.6	$5R_G/7$

(B)

EXAMPLES

NO. OF CHANNELS N	INSERTION LOSS, db.	BUILD-OUT RESISTOR R_E	OUTPUT IMPEDANCE
2	4.8	$R_G/2$	$3R_G/4$
3	7.0	$2R_G/3$	$5R_G/9$
4	8.4	$3R_G/4$	$7R_G/16$
5	9.5	$4R_G/5$	$9R_G/25$
6	10.4	$5R_G/6$	$11R_G/36$

(D)

Fig. 18-6. (A) Four channel constant Z mixer. (B) Formulas for build-out resistor and insertion loss, with sample calculations. (C) Four channel mixer with varying output Z. (D) Formulas and sample calculations. Figures for insertion loss cover the mixer when assembled with pads of 0 minimum loss. Use of ladders will increase this loss by 6.0 db. for the mixer, and an added amount if the ladder is used for master gain control.

cal four channel parallel mixer of the constant impedance type, and Fig. 18-6B gives both the formulae and typical values. Formulae for the necessary "build-out" resistors are included where the circuit parameters require them. Fig. 18-6C shows the schematic for the four channel variable impedance mixer and Fig. 18-6D covers the formulae and typical examples of the calculations.

To match this system to a standard master amplifier or even a master gain control requires a repeat coil with a number of input impedances available, and of such design that its transmission characteristics are equal to or above the over-all characteristics of the system. It is well to isolate the secondary of the repeat coil from the master amplifier input transformer primary with some sort of a pad. A potentiometer gain control can be used in the master amplifier in this type of system and this is frequently found in moderate priced ready-built studio equipment offered to the broadcasters.

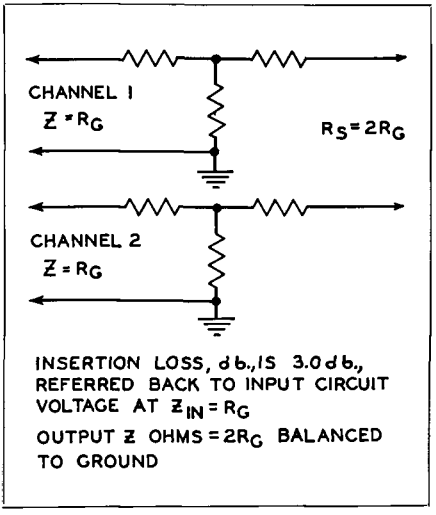

Fig. 18-7. The Two Channel series mixer.

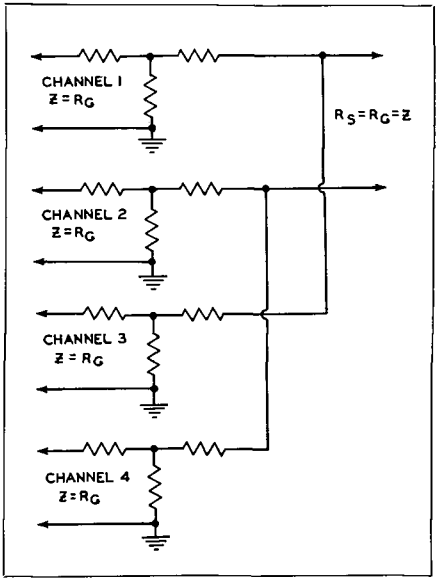

Fig. 18-8. Four-channel parallel-series mixer whose loss is 6 db and whose impedance ratio is unity.

Series Mixers

These mixers as a rule are not desirable because they do not allow grounding of every input channel if more than two such channels are used. However, the two channel mixer is accepted and is used in transmitter control desks between two turntables and for small studios. See Fig. 18-7. Parallel-series and series-parallel mixers are to be avoided because of their varying impedance characteristics and the inability to properly ground several channels. The number of channels effects the loss and impedance, and there is a strong tendency for the settings of the individual controls to be reflected in the other channels.

One exception to this type of circuit is the special design of four channel mixer, Fig. 18-8, which allows for perfect grounding of all channels and has an insertion loss of only 6 db provided T pads are used. One point to observe is that the output is balanced to ground, which would require using a balanced attenuator or repeat coil if a single ended master control is on hand. If the program amplifier has its own gain control shunting the input transformer the four channel mixer will work into its characteristic impedance and obviate an expensive dual attenuator. Special study of this circuit is warranted as it will be the one most frequently used by the audio facilities engineer of small and large broadcasting stations and recording studios.

There is no substitute for quality when selecting an attenuator for use in high quality sound installations. This applies in particular to broadcasting requirements and to professional recording studios. Even in low priced recorders extreme care should be taken to select equipment having low noise level when turning the various volume controls (attenuators) of the circuits. Many commercial amplifiers today are lax in their selection of proper gain controls and some are extremely noisy and result in great distortion through the circuits which they control.

Reference: Keim, L. B., "Attenuators." Radio-Electronic Engineering edition of Radio News, April, May, 1948.

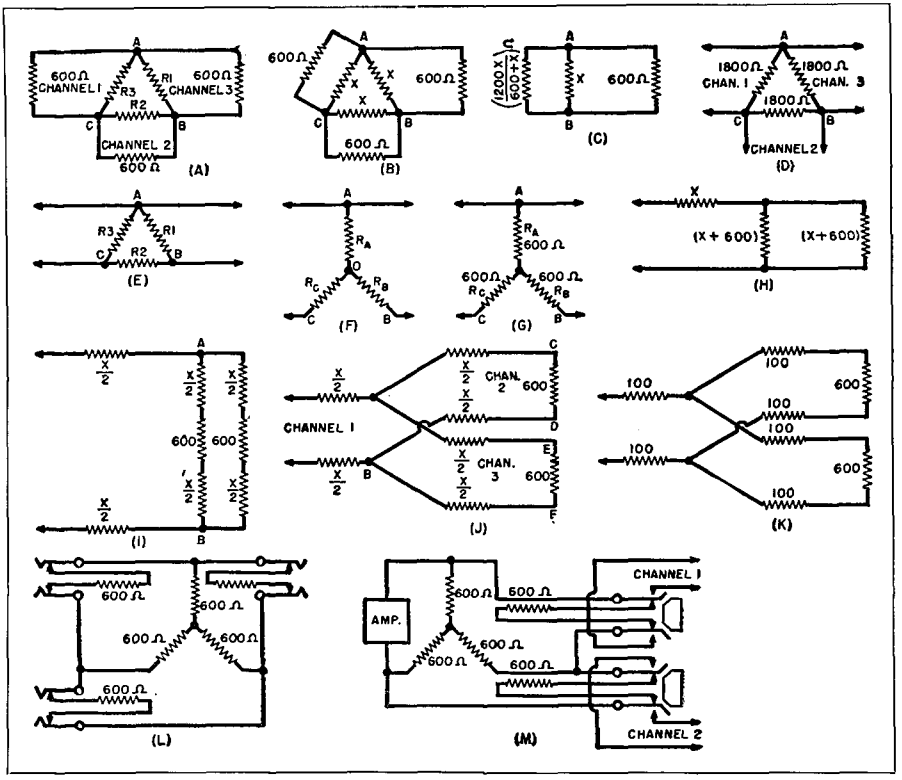

Fig. 18-9. Various forms of pads designed for impedance matching.

Splitting Pads

It is sometimes necessary in audio, communications and television work to apply two alternating currents such as speech, carrier, or music currents to one channel. This may be done by means of a transformer, but owing to the electromagnetic fields and frequency losses from the transformer, this method is not always desirable, and another method using combinations of non-inductive resistances is sometimes used. This method involves the formation of resistance networks, called pads, from non-inductive resistances. In the case of 600 ohm circuits it is usual to make matching pads from 1200 to 600 ohms and to connect the 1200 ohm outputs in parallel. There is a third method, shown in Fig. 18-9A, using a network of standard non-inductive resistors which involves a small power loss but is less expensive than the other methods.[1]

An application of this method is shown in Fig. 18-9A, where it is used to connect two sources of alternating current to one channel or *vice versa*. For purposes of matching, it is necessary to make the values R_1, R_2, R_3, shown in Fig. 18-9A, such that when channels 1 and 2 are terminated in their correct impedances (600 ohms), then channel 3 will also be 600 ohms. Fig. 18-9A may be simplified to the arrangement shown in Fig. 18-9B. Now, when two resistances, R_1 and R_2, are connected in parallel, their joint resistance may be found by the aid of the formula:

$$R_T = \frac{R_1 R_2}{R_1 + R_2} \quad . \quad . \quad . \quad . \quad (1)$$

[1]Carmichael, H. C., "Splitting Pads," Radio & Television News, Vol. 45, No. 4.

If this formula is applied to Fig. 18-9B, then the joint resistance of the two paths (600 ohms and x ohms) from A to C is:

$$\frac{600\,x}{600 + x}$$

Similarly, the joint resistance of the two resistances (600 ohms and x ohms) between B and C is:

$$\frac{600\,x}{600 + x}$$

These two joint resistance values are in series with respect to the line and thus their total resistance is:

$$\left(\frac{600\,x}{600 + x}\right) + \left(\frac{600\,x}{600 + x}\right) = \frac{1200\,x}{600 + x}$$

The other resistor from A to B (x ohms) is in parallel with this combination as shown in Fig. 18-9C which is a further simplification of Fig. 18-9A. Thus, if formula (1) is applied to this circuit, then the joint resistance of the combination will be:

$$\frac{\left(\dfrac{1200\,x}{600 + x}\right) x}{\left(\dfrac{1200\,x}{600 + x}\right) + x}$$

This, of course, must equal the resistance of channel 3 and thus:

$$\frac{\left(\dfrac{1200\,x}{600 + x}\right) x}{\left(\dfrac{1200\,x}{600 + x}\right) + x} = 600$$

This may be simplified to show that $x = 1800$ ohms.

Fig. 18-9D shows the resistance network to satisfy the conditions shown in Fig. 18-9A.

Power Loss of Pad

The power loss from each channel to the mixer channel resulting from the use of this pad can be calculated as follows. Assuming a voltage of 10 volts across a source of 600 ohms in channel 3, then the voltage across points A and B in Fig. 18-9D would be 10 volts and the voltage across points A and C would be 5 volts, as the resistance of the combined resistor AC is equal to the combined resistor CB. The power loss equals:

$$20 \log \frac{E_1}{E_2}$$

and if the information supplied in the data is substituted in this formula, then:—

$$\text{Power loss} = 20 \log \frac{10}{5} = 20 \log 2 = 6.02 \text{ decibel}$$

Delta to Star Conversion

Another connection called the "star" connection has the advantage over the "delta" connection of being a simpler combination, and the delta circuit shown in Figs. 18-9D and 18-9E may be converted to the star or "Y" connection shown in Fig. 18-9F. Now, if these circuits are to be equivalent, then the resistance between points AB, BC, and CA in Figs. 18-9E and 18-9F must be similar. At a glance it may be clear that in Fig. 18-9F the resistance from A to O will equal 600 ohms, the resistance O to B will also equal 600 ohms, making A to B equal to 1200 ohms as required. It may be mathematically proved, however, that:

$$R_A = \frac{R_1\ R_3}{R_1 + R_2 + R_3}$$

$$R_B = \frac{R_1\ R_2}{R_1 + R_2 + R_3}$$

and

$$R_C = \frac{R_2\ R_5}{R_1 + R_2 + R_3}$$

For example, to convert the delta formation in Fig. 18-9D to an equivalent star or "Y" formation, then:—

$$R_A = \frac{1800 \times 1800}{1800 + 1800 + 1800} = 600 \text{ ohms}$$

and likewise, R_B and R_C will be equal to 600 ohms respectively. The equivalent star or "Y" connection would be then as shown in Fig. 18-9G.

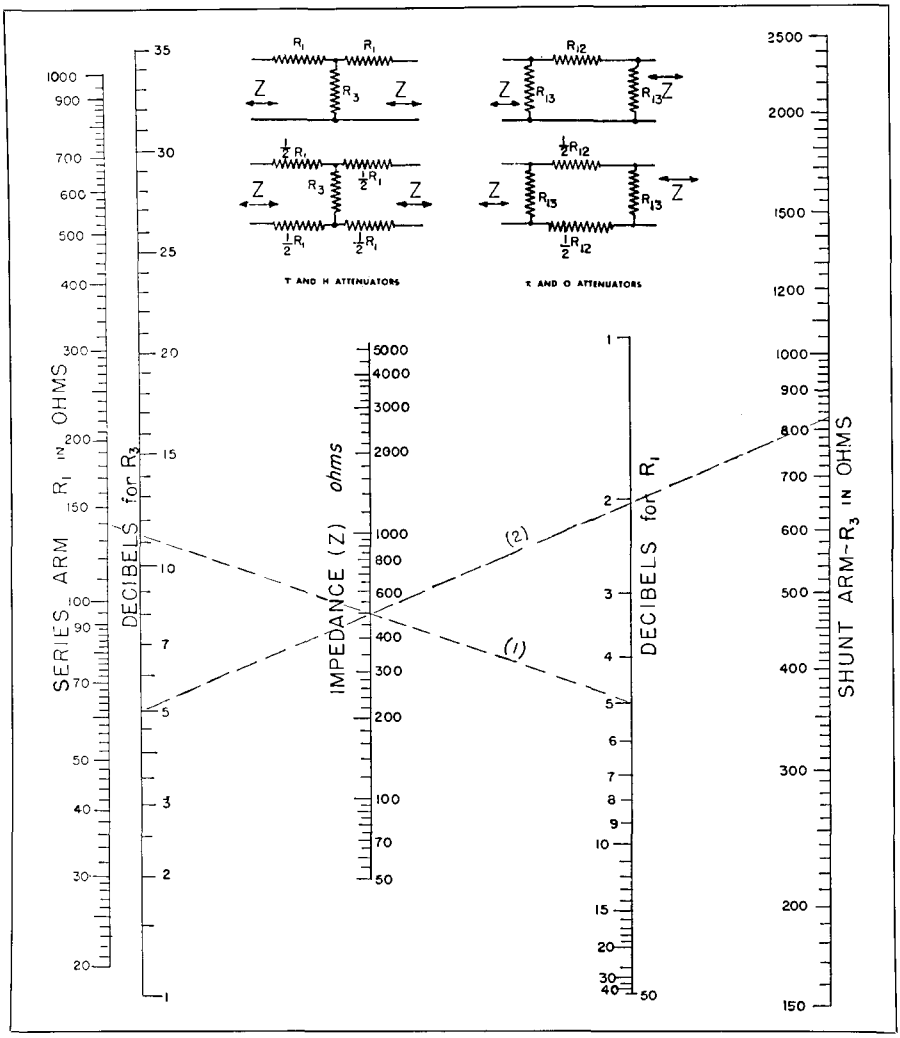

Fig. 18-10. Symmetrical T and H Attenuators. A monograph for designing symmetrical attenuators when the terminal impedance and required loss are known. A straight line through "Decibels for R_1" and "Impedance" gives value of R_1. Another line through "Decibels for R_3" and "Impedance" gives value of R_3 for T and H attenuators. Example shows design of a 500 ohm attenuator with a 5 db loss. The value of R_1 is 140 ohms and that of R_3 is 822 ohms. For symmetrical π and O attenuators, the monograph is used to determine values of R_1 and R_3. The values of R_{12} and R_{13} are then given by the following equations: $R_{12} = Z^2/R_3$ $R_{13} = Z^2/R_1$.

(Courtesy Federal Telephone and Radio Corporation.)

Practical Application

This type of network has practical application in circuits such as the one shown in Fig. 18-9L where three balanced channels are connected together via the star connection. This circuit enables two sources of alternating current to be fed into one channel or one source of alternating current to be split into two channels.

Another practical application of the star pad is shown in Fig. 18-9M where the output from an amplifier may be:—

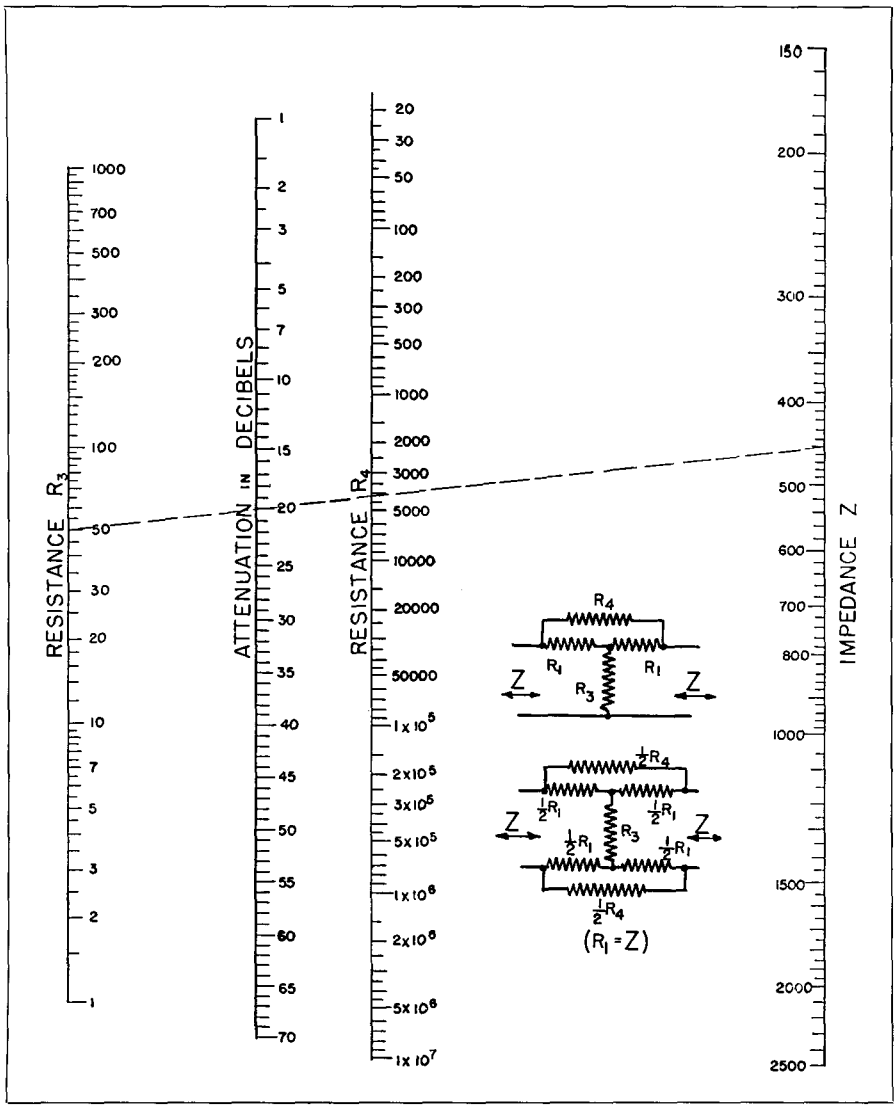

Fif. 18-11. Bridged T and H Attenuators. The design of bridged T and H attenuators can be readily accomplished with the aid of the monograph. The known factors in bridged T and H attenuator design are usually the terminal impedance ond the attenuotion. A straight line passing through these two points on the monograph shown below gives the values of R_3 and R_4. R_1 equals the terminal impedance. In the example shown, a terminal impedance of 450 ohms and an attenuation of 20 db gives $R_1 =$ 450 ohms, $R_3 =$ 50 ohms, and $R_4 =$ 4050 ohms. (Courtesy Federal Telephone and Radio Corporation.)

(a) Disconnected from both channels,
(b) Connected to both channels, or
(c) Connected to either channel.

This arrangement may be also used to mix the output of two amplifiers into the one channel.

There are many and varied applications of this simple circuit arrangement but it must be remembered that the loss of 6.02 decibel is a disadvantage. The use of standard 600 ohm non-inductively wound bobbins considerably simplifies

the construction of the pads and carbon resistors of suitable value may also be used.

Matching with Series Resistors

Another method of matching is by the use of series resistances in each branch of individual circuits as shown in Fig. 18-9J. In this circuit, channels 2 and 3 are assumed to be terminated in their correct impedances, and thus channel 1 must look like 600 ohms. Now the circuit shown in Fig. 18-9J may be simplified to that shown in Fig. 18-9I, and Fig. 18-9I, in turn, simplified to that shown in Fig. 18-9H. The joint resistance of two equal resistances in parallel may be found by dividing the resistance of one by the number of resistances connected in parallel, and in the case of the two equal resistances shown in Fig. 18-9H, the joint resistance will be:—

$$\frac{(x + 600)}{2}$$

The impedance of the network shown in Fig. 18-9H must match the impedance of channel 1 (that is, 600 ohms) and thus:—

$$x + \frac{x + 600}{2} = 600$$

therefore $x = 200$ ohms.

This value of 200 ohms represents the sum of the values of both resistors in each branch of the network and thus each resistor will be:—

$$\frac{x}{2} \text{ or } \frac{200}{2} \text{ or } 100 \text{ ohms}$$

The completed circuit will then be as shown in Fig. 18-9K. This circuit has an approximate loss of 4.44 decibels in each channel which, however, is not a very series disadvantage. The same circuit arrangements may be used with this method as shown in the previous circuits, and, while not as simple as these, it is nevertheless simpler than the standard matching pad. Another feature of the split pad is that the pad does not affect the frequency response, provided that non-inductive resistors are used.

CHAPTER 19

Amplification

Detailed analysis of several audio amplifiers, their characteristics, performance and limitations. Inverters, noise suppressors and feedback are discussed.

Classification

● The Institute of Radio Engineers recognizes four distinct classes of amplifier service. These classes are, Class A, Class AB, Class B, and Class C. The term cut-off bias used in definitions is the value of grid bias at which plate current is of very small value. The principal classifications are as follows.

Class A Amplifier: The Class A Amplifier is an amplifier in which the grid bias and alternating grid voltages are such that plate current in a specific tube flows at all times.

Class AB Amplifier: The Class AB Amplifier is one in which the grid bias and alternating voltages are such that plate current in a specific tube flows appreciably more than half, but less than the entire electrical cycle.

Class B Amplifier: A Class B amplifier is an amplifier in which the grid bias is approximately equal to the cut-off value so that the plate current is approximately zero, when no exciting grid voltage is applied. Plate current in a specific tube flows for approximately half of each cycle when an alternating grid voltage is applied.

Class C Amplifier: A Class C Amplifier is an amplifier in which the grid bias is appreciably greater than cut-off value, so that the plate current in each tube is zero when no alternating grid voltage is applied, and so that plate current flows in a specific tube for appreciably less than one-half of each cycle when an alternating grid voltage is applied.

Voltage and Power Amplifiers

There are two principal classes of amplification used in audio. The first is the *voltage* amplifier, which builds up minute currents from microphones, low-level pickups, etc., and increases the minute output voltages of these devices to a value suitable for driving following vacuum tubes.

The *power* amplifier is designed to deliver appreciable audio power to loudspeakers, recording cutters, etc.

Multi-stage amplifiers generally consist of several stages of voltage amplification followed by one or more stages of power amplification. The total amplification is limited by miscellaneous noises produced as a result of thermal agitation and shot effect which occur in the first stage and are amplified along with the signal. When the amplification becomes so great that these noises become a large part of the output, the amplifier becomes useless. Therefore, it is necessary to keep the noise down, especially in the first stage. Operating the units at lower voltages and using

special tubes and feed back circuits are some of the remedies employed.

In multi-stage design it is important to proportion the stages so that none of the early stages can become overloaded before maximum output is obtained in later stages. Such a condition may occur if the volume control is placed in the second stage and the input device delivers more voltage than the bias of the first stage. Placing the volume control in a later stage will make the condition even worse unless the amplifier is to be used for only one input device having very low output. In general it is best to put the volume control in the earliest possible stage and to place the tubes having low bias and high gain early in the circuit.

Voltage Amplifiers

A tube used as a voltage amplifier delivers maximum amplification (equal to mu) if the ac load is infinite and the actual plate voltage remains at the rated value. The gain drops with the plate load and with the plate voltage, so that the best compromise of plate load and plate voltage, must be determined. Other problems such as parallel capacitance must be taken into consideration as well as careful choice of tubes as recommended in the tube handbooks.

The obtainable gain and maximum output, as well as the distortion of any tube can be determined for any load and power supply by a geometrical construction of the family of curves. (E_p-I_p curves). When the load has the same ac and dc resistance the load line is drawn from the plate supply point on the X axis at a slope equal to $1/R$ or I/E taking into consideration the scale of units employed along the coordinate axes. An operating point is then selected representing the fixed grid bias. Variations in plate current, and plate voltage, for any grid voltage can then be read. The load should be so selected that the intersections of grid voltage lines are regularly spaced.

When the ac load is different from the dc load a load line should first be drawn corresponding in slope to the dc load and starting from the plate voltage point on the X axis. At the chosen operating point the real load line should be constructed at a slope corresponding to the ac load resistance. Maximum output and gain are immediately apparent from the curves.

Power Amplifiers

Maximum undistorted power output is obtained from triodes when the load equals $2R_p$, and for pentodes when the load is approximately one-fifth R_p. The performance as a single-ended Class A amplifier can be predicted from the E_p-I_p curves as shown in the example in Fig. 19-1. Draw the load line through the chosen operating point with the slope corresponding to the ac load (the dc resistance is usually negligible). For minimum distortion the segments of the load line PQ and PR should be equal. When the ratio of their respective lengths is 9:11, the harmonic distortion is five per-cent.

In Fig. 19-1 maximum power output and harmonic distortion is given in the equations. Fig. 19-2 gives the same data for pentodes. The gain of amplifiers is often given in decibels. The decibel is a logarithmic unit, expressing the ratio between two magnitudes of power. Mathematically: db equal 10 log (P_1/P_2), where P_1 and P_2 are the output and input power (in watts) re-

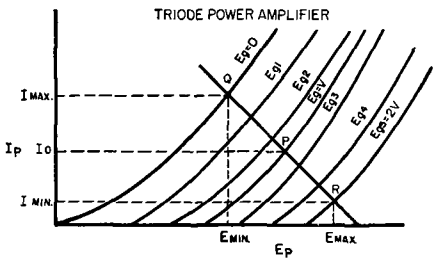

$$\text{POWER OUTPUT, WATTS} = \frac{(I_{MAX}-I_{MIN})(E_{MAX}-E_{MIN})}{8}$$

$$\text{PERCENT 2nd HARMONIC} = \frac{\frac{I_{MAX}+I_{MIN}}{2}-I_0}{I_{MAX}-I_{MIN}} \times 100$$

Fig. 19-1.

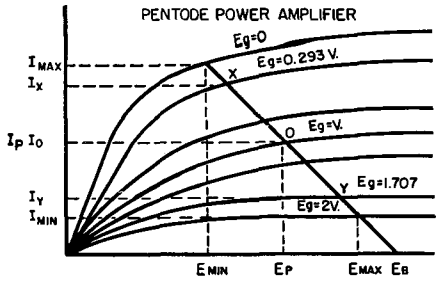

$$\text{POWER OUTPUT, WATTS} = \frac{[I_{MAX}-I_{MIN}+1.41(I_X-I_Y)]^2 R_P}{32}$$

$$\text{PERCENT 2nd HARMONIC} = \frac{I_{MAX}+I_{MIN}-2I_O}{I_{MAX}-I_{MIN}+1.41(I_X-I_Y)} \times 100$$

$$\text{PERCENT 3rd HARMONIC} = \frac{I_{MAX}-I_{MIN}-1.41(I_X-I_Y)}{I_{MAX}-I_{MIN}+1.41(I_X-I_Y)} \times 100$$

Fig. 19-2.

spectively of the amplifier. When the impedance at input and output are equal, the decibel may also be expressed in terms of voltages or currents: db. equal 20 log (E_1/E_2), or db equal 20 log (I_1/I_2).

The decibel is used, in addition, as a unit of loss and gain in networks. Although the decibel is not an absolute unit of power level, it can be used to indicate the power level in decibels above or below an arbitrary "Zero Level." One of the most frequently employed zero levels is 6 milliwatts. In acoustical measurements a zero level of 10 to the 16th watts per square cm. has been accepted (see Chapter 8.).

Coupling Methods

Audio-Frequency amplifiers may be further divided according to their type of coupling into resistance-coupled amplifiers, transformer-coupled amplifiers, impedance-coupled amplifiers and direct-coupled amplifiers.

The charts of Figs. 19-3, 19-4, 19-5, and 19-6 show the fundamental circuits. Complete information on the constants for resistance coupled amplifiers and their performance will be found in the tube manuals and in the Appendix.

Resistance-coupled amplifiers have the advantage of economy and the frequency response can be made nearly flat. The phase distortion is less than

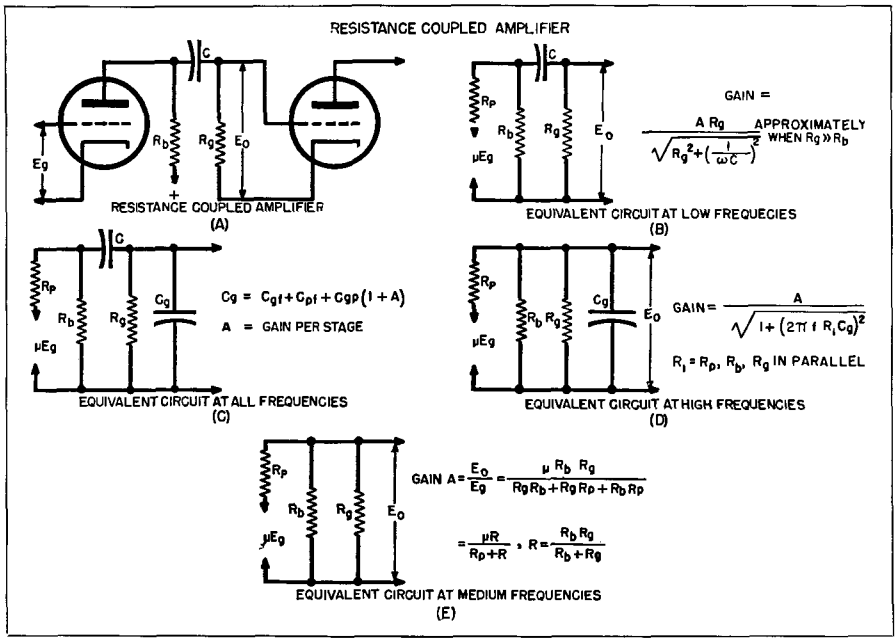

Fig. 19-3.

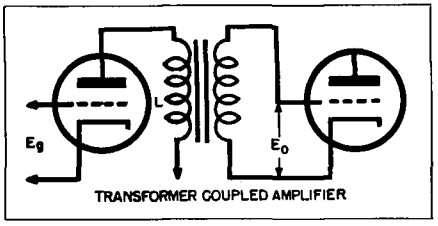

Fig. 19-4.

that of other types of coupling except direct-coupling. Disadvantages include lower gain than impedance or transformer-coupling with the same tubes and power supply, and the tendency to "motorboating."

Impedance-coupled amplifiers have a lower voltage drop across the load, thus making the plate voltage higher. The frequency response falls off at the low end as well as at the very high frequencies, above the point where parallel resonance occurs. The drop at the low end can be minimized by placing a resistor across the plate choke. If the value of the resistance is ⅓ of the choke reactance at the lowest frequency, or less, the impedance of the combination will not vary more than a few percent over the audio range.

At present, transformer-coupled triode amplifiers can be designed to have a frequency characteristic as good as that of a resistance-coupled amplifier. The gain of such amplifiers is not as high as that of the resistance-coupled amplifiers using pentode tubes, and the cost of the transformers is higher. When sensitive amplifiers are used and a transformer is used at the input, the hum problem is much greater than with *RC* amplifiers. Well-shielded transformers are required, and even then critical orienting is necessary.

Direct-coupling is a special modification of resistance coupling. In such circuits the plate of the first stage is connected directly to the grid of the next, a condition which requires some juggling with power supplies. Since the load between stages is a resistance and the coupling elements per stage are reduced this type of amplifier can be made to have excellent response. Frequency response at low frequencies is better and delayed distortion is less. The main

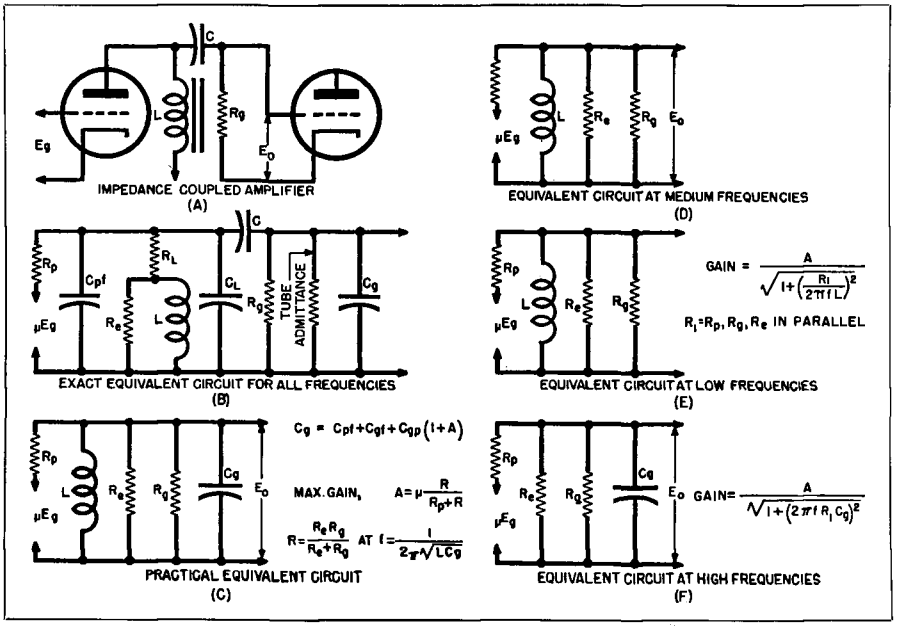

Fig. 19-5.

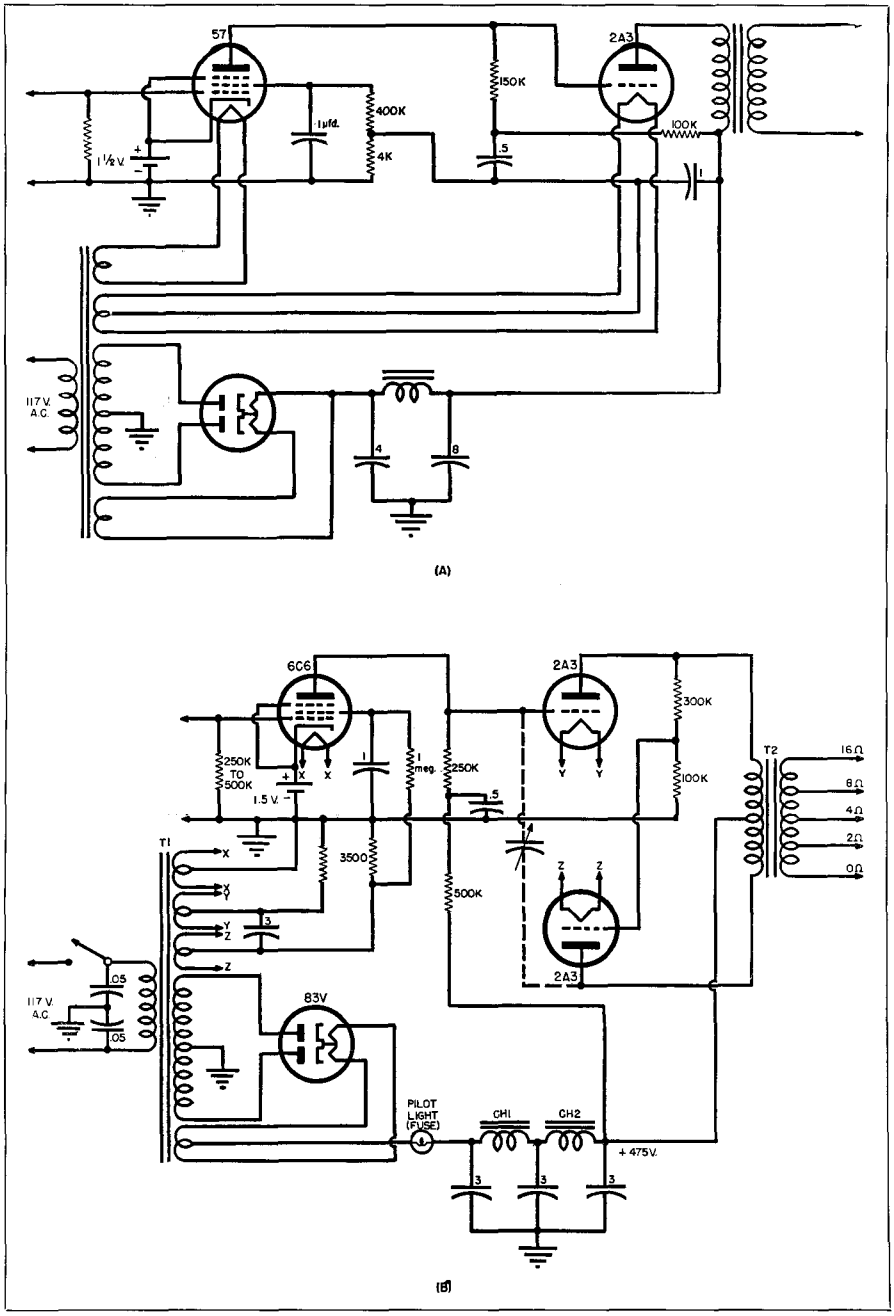

Fig. 19-6.

difficulties are the tendency to drift due to temperature changes and the difficulty in designing amplifiers of many stages. It is possible however, to make an amplifier employing a drift corrector which makes the system practical for amplification of ac signals but not for dc. Practical circuits for a single

ended amplifier and a push-pull amplifier are shown in Fig. 19-6.

Phase Inverters

The requirements of a push-pull audio amplifier are such that it is necessary to excite each grid, or bank of grids, with equal audio voltage. The voltage on one side of a balanced amplifier must be opposite in phase to that on the other side of the amplifier if the voltages from each side of the amplifier are to mix properly in the plate transformer; i.e., the voltage applied to one grid or bank of grids must reach its positive peak in the ac cycle at the same instant that the voltage applied to other grid or bank of grids reaches its negative peak in the ac cycle.

The action of the output transformer will reveal why this is necessary. If the grid voltages were in phase, the plate current through the two tubes would rise or drop simultaneously, and their effect would cancel in the output transformer resulting in no output. However, if the grid voltages were 180 degrees out of phase the current in one tube would be rising, while that in the other tube would be falling, with the result that induced voltage in the secondary of the output transformer would be twice that for one tube.

A good high quality interstage transformer, with a center-tapped secondary, is the simplest and best method of obtaining this excitation voltage, since the voltages at the opposite ends of this secondary winding are 180 degrees out of phase. However, most manufacturers have reverted to resistance-coupled phase inversion. This electronic method of satisfying the excitation requirements of push-pull audio amplifiers was chosen for several reasons.

The fidelity of the resistance-coupled phase inverter is as good as, if not better than, that of most transformers. The space that a phase inverter consumes is only one-third to one-half as great as that of a transformer. The original cost is a great deal less since it is made up of the tube and a few inexpensive resistors and condensers whose electrical values are not too critical. Furthermore it is possible to attain a higher frequency response and, in some circuits, a higher voltage step-up than is possible from low price interstage transformers. A good transformer of broadcast quality has the advantage that it has a much higher inherent stability than the phase inverter and for this reason it is used in commercial communications work. Another advantage of a good transformer is that the impedance in the grid circuits following the driver can be high while the dc resistance can be kept low. This condition is almost necessary in the case of a Class A2 amplifier where grid current flows over a portion of the cycle. It is necessary to keep the next stage grid resistors comparatively high when using the phase inverter in order to prevent loading of the inverter which would cause unbalance because of changes in the excitation voltage to the inverter tube grid, and would seriously impair the response at the higher frequencies.

The purpose of the phase inverter is to provide two voltages which are equal in magnitude and 180 degrees out of phase, which can be utilized to drive a push-pull amplifier. There are numerous methods of accomplishing this but the basis of operation of the majority of the systems is that a small portion of the output voltage from either the driver stage or the output stage is coupled to a similar driver tube or to the grid of the other output tube through a suitable coupling arrangement to provide the necessary excitation voltage for the push-pull tubes.

One of the first phase inversion systems ever used was of this type and is shown in Fig. 19-7. Two resistors, R_3 and R_4 are connected in series across the first half of the output transformer primary. The grid voltage for the second output tube is taken from the junction of these two resistors and fed to the grid of the second tube through coupling condenser C_2 whose value is

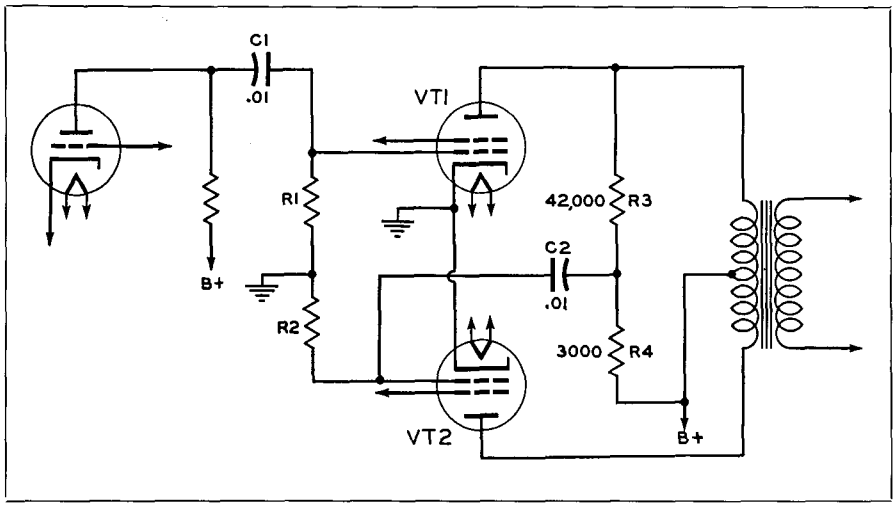

Fig. 19-7. Phase inversion takes place in the output stage. This system has the advantage of not requiring an inverter tube or additional transformers.

generally .01 μfd and is always the same as that of C_1. When first looking at the circuit it is difficult to see how such an arrangement can satisfy the requirements of the phase inverter. However, the voltage developed across R_3 and R_4 is 180 degrees out of phase, with that developed across R_1. Because of the 180 degree phase shift in VT_1, the size of R_3 and R_4 are adjusted so that the magnitude of the voltage fed to the grid of VT_2 is the same as that appearing at the grid of VT_1. Thus, the two grid voltages are equal in magnitude but 180 degrees out of phase. In Fig. 19-7 it is assumed that VT_1 has a gain of 15, so R_3 and R_4 of the output voltage of VT_1 is fed to VT_2.

Other values of resistors could be used proportionately. However, if the total resistance is very far below a critical value (fifty thousand ohms) the transformer will be loaded with a resultant reduction in power and fidelity, while, if the total resistance is much higher the balance will be affected on high frequencies, due to the effects of stray capacities in wiring, transformer distributed capacities, and the output and input capacities of the tubes.

The values of R_1 and R_2 are standard for the type of tubes used and should both have the same value. The parts values are not critical and in the case of most electronic equipment a tolerance of 10% is allowable, which gives one a chance to use standard replacement parts if the exact size is not available. The small mismatch that could be caused with this tolerance is easily balanced out in the output transformer with no ill effects other than a slight reduction in the output voltage. This circuit is almost entirely independent of tube characteristics. If the excitation voltage to VT_1 drops or if the emission in VT_1 drops there will be a similar reduction in the voltage drop across R_4. Therefore the excitation voltage to VT_2 will be reduced accordingly. Under these conditions only the characteristics of VT_2 can really greatly effect the fidelity of the amplifier.

The circuit has the definite advantage that it is simple and uses conventional output tubes. Its disadvantages are slight—may be neglected in most receivers. The resistors across the transformer primary have a loading effect on the transformer regardless of their value. The circuit is adaptable to all

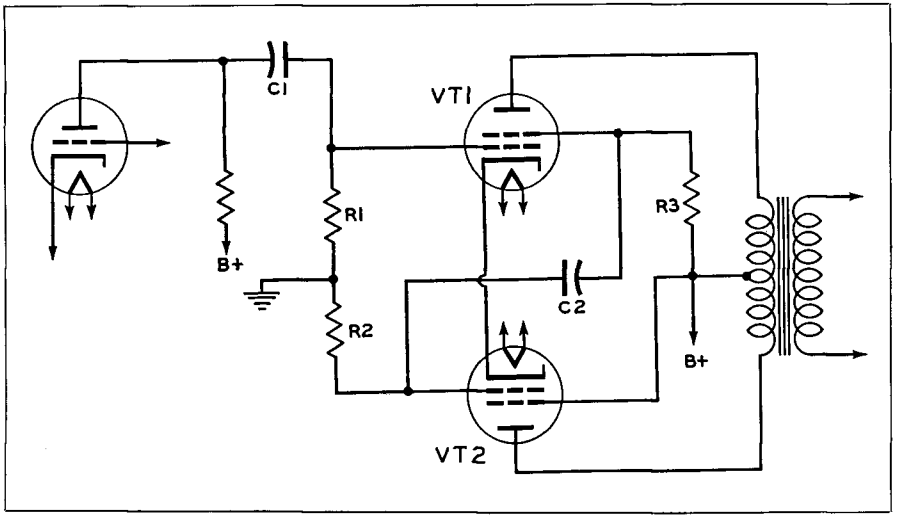

Fig. 19-8. Similar in operation to Fig. 19-7, with the exception that advantage is taken of changes in the screen grid current in order to obtain phase inversion.

types of output tubes whether they are triodes, pentodes or tetrodes.

In Fig. 19-8 is a similar circuit. Advantage is taken of the changes in screen grid current. The voltage drop across resistor R_3 is 180 degrees out of phase with the input voltage. The value of resistor used depends on the tubes requirements.

Another method of phase inversion in the output stage is shown in Fig. 19-9. In this circuit a 6AD7 triode-pentode is used as one output tube. The pentode section of this 6AD7 is identical to a 6F6. The triode section is used as an inverter and gets its grid voltage from a voltage dividing network (R_1 and R_2 in the pentode grid circuit). The re-

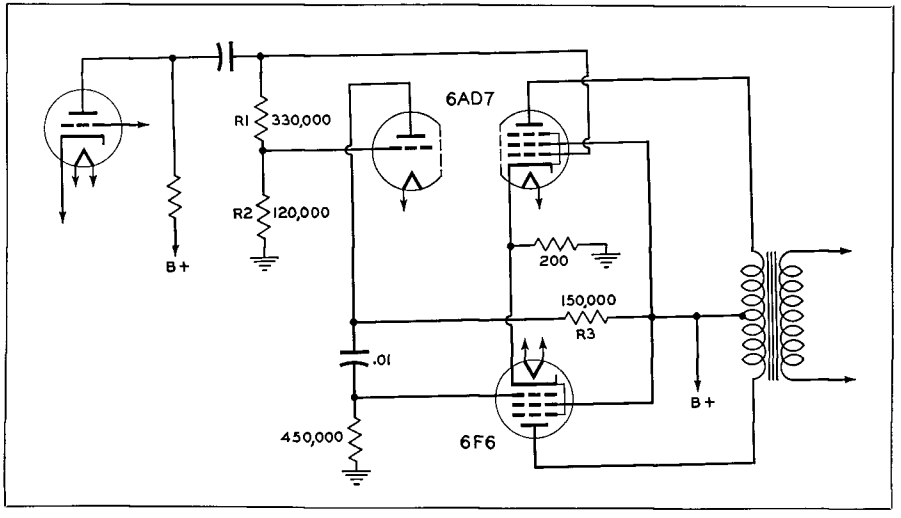

Fig. 19-9. A 6AD7 triode-pentode is used as an output tube. The pentode section is used for push-pull operation and the triode section is used as an inverter.

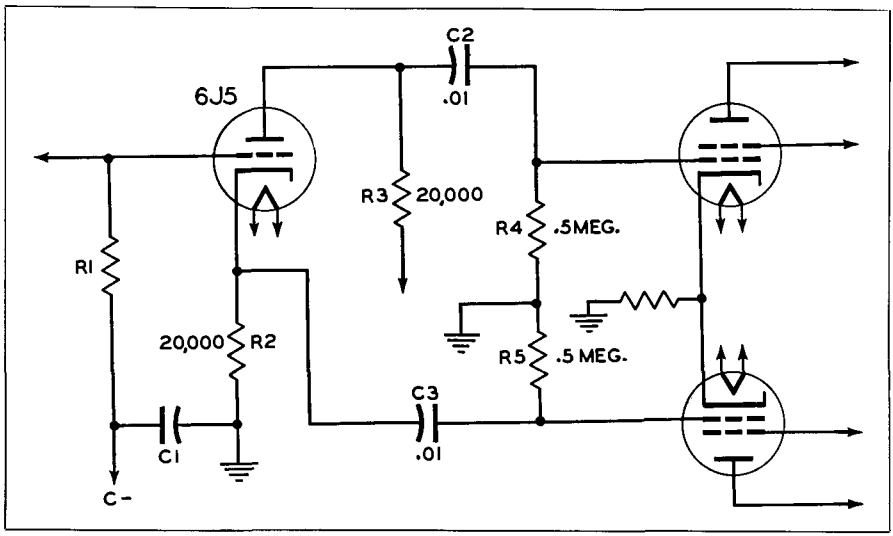

Fig. 19-10. The 180° phase shift, necessary for proper phase inversion, is obtained by taking advantage of the signal voltage on the cathode of the 6J5 triode tube.

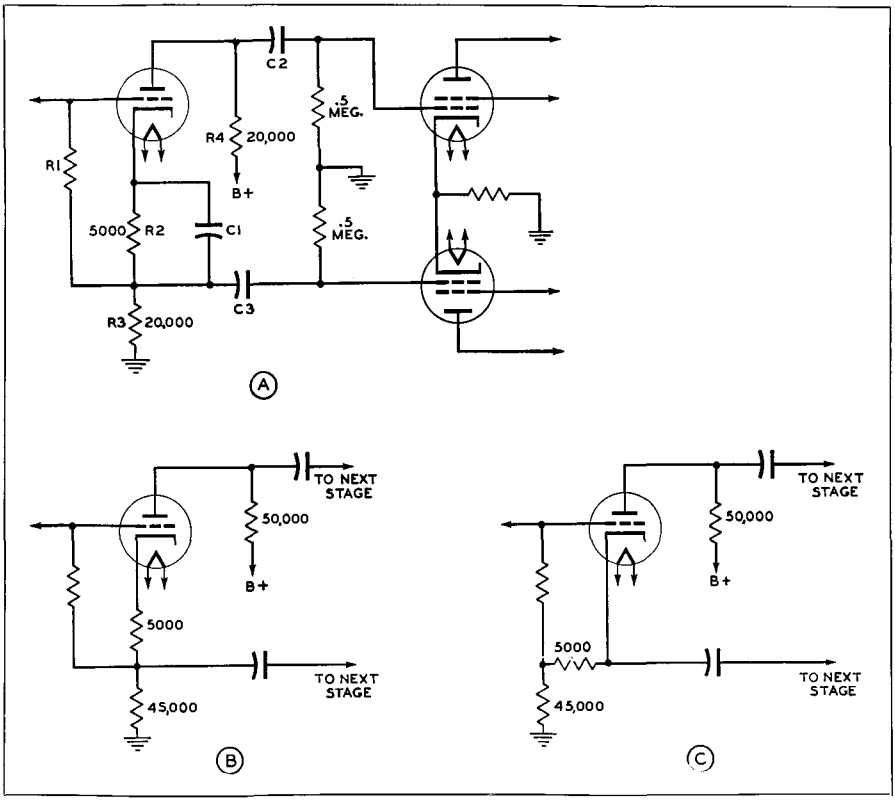

Fig. 19-11. Similar in operation to Fig. 19-10, with the exception that the 6J5 is now self-biased which will eliminate the addition of a bias voltage source.

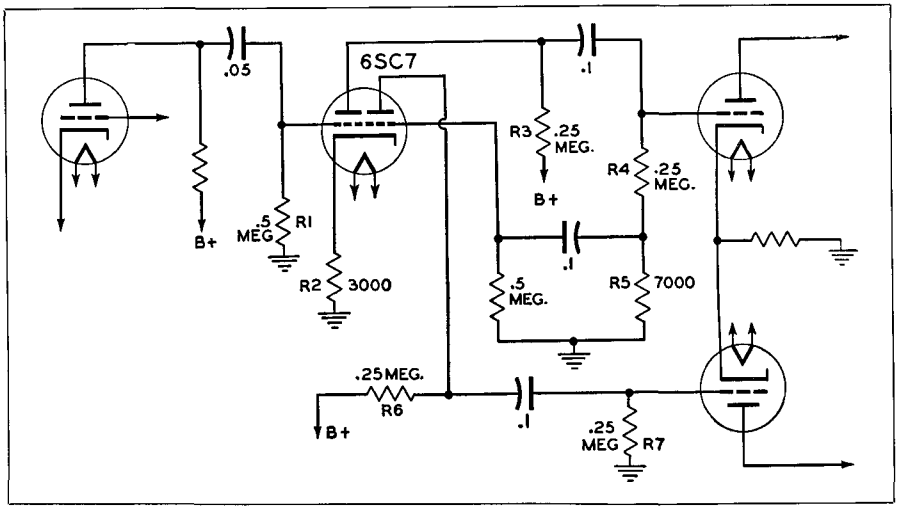

Fig. 19-12. Basic circuit used extensively in commercial sound systems.

sistors in the voltage divider are so proportioned that when used with the resistor R_3 the voltage on the 6F6 grid is equal in magnitude but opposite in phase to that which is on the grid of the pentode section of the 6AD7.

In Fig. 19-10 we have what is probably the simplest of these inverter-driver systems. A simple triode such as a 6C5, 6J5, or 76 is used. The plate and cathode resistors are made equal. When a signal is applied to the grid of the tube over the positive half of the ac cycle, the current in both resistors (R_2 and R_3) increases. This increase in current causes an increase in voltage drop across the resistors. As a result the voltage at the plate of the tube becomes more negative with respect to ground and the voltage at the cathode becomes positive with respect to ground. When the two resistors are of equal value, the

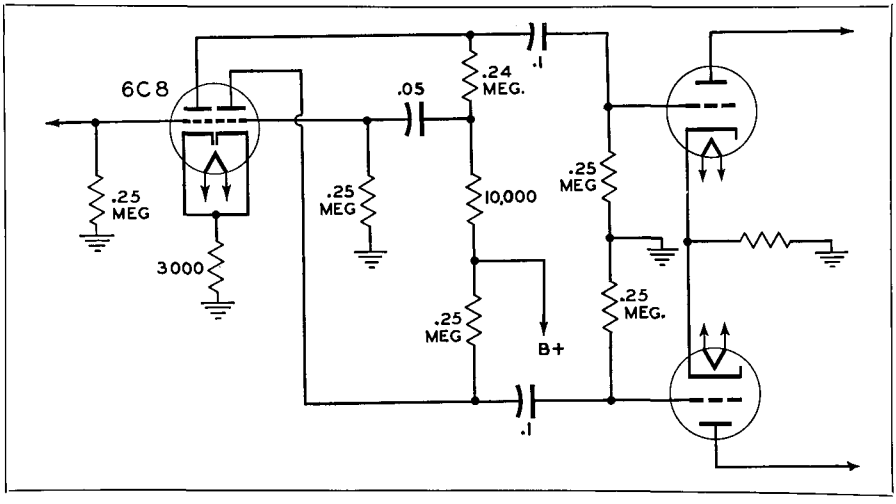

Fig. 19-13. A dual triode is used as an inverter tube. Like Fig. 19-12, no transformers are needed in its operation. The 6C8 is considered a good inverter tube.

peak negative value at the plate is equal to the peak positive voltage at the cathode. Since these two voltages are 180 degrees out of phase, they may be utilized to drive a push-pull amplifier.

The values of resistors R_2 and R_3 are not critical and any value from 20,000 ohms upwards to 50,000 ohms is satisfactory as long as both values are the same, the higher value giving slightly higher output voltage. The circuit could also be adapted to the high gain type triodes, such as a 6F5, 6SF5, 6SQ7, etc.

In Fig. 19-11 this circuit has been modified to provide self bias. Fig. 19-11A shows the original basic circuit. Cathode resistor R_2 is heavily bypassed by C_1 and the grid return resistor R_1 is connected to the junction of R_2 and R_3 where the next stage audio voltage is taken. Because R_2 is heavily bypassed very little audio voltage is developed and no degeneration takes place. This circuit is not as satisfactory for phase inversion because of the stray capacitance across R_3.

In Fig. 19-11B this basic circuit has been altered. The total resistance of both plate and cathode resistors has been raised to 50,000 ohms. The cathode condenser has been eliminated with the result that a small amount of degeneration results. This degeneration lowers the gain of the tube.

Fig. 19-12 shows the basic circuit used in most commercial sound systems. A dual triode, such as a 6SC7, 6SN7, 6C8, or 6N7, is used for the inverter tube. The input voltage applied to the first grid of the 6SC7, is amplified and applied to the grid of the next stage, across resistors R_4 and R_5. The ratio of these resistors determines the grid voltage to the second section of the inverter tube, and is equal to the output voltage of the first section divided by the input voltage. Since the gain of this circuit, using a 6SC7 is 36 the ratio of R_5 to the total value of R_4 plus R_5 will be 36. In this case the values of the resistors are 250,000 ohms for R_4 and 7,000 for R_5 which is approximately 1/36 of the output voltage. Since the plate resistors R_3 and R_6 are equal as are the next stage grid resistors, the voltages applied to the next stage grids are equal in magnitude and 180 degrees out of phase.

In Fig. 19-13 we have a similar circuit. In this case a 6C8 inverter is used and

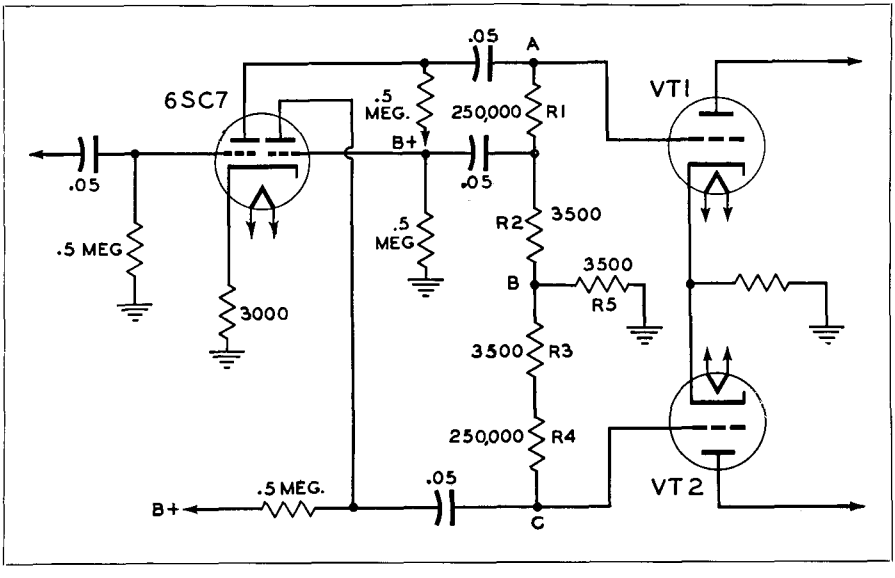

Fig. 19-14. Modified arrangement of Fig. 19-12. This circuit compensates for part of the unbalance that might otherwise occur.

operation is essentially to that of Fig. 19-12. The choice of tubes will depend largely upon the necessary output voltage. The 6F8 is essentially two 6J5's in one envelope and is a very satisfactory inverter tube where low gain is desirable.

In Fig. 19-14 we have the modified arrangement of Fig. 19-12. The modification consists of breaking the 7,000 ohms voltage divider into two 3500 ohm resistors R_2 and R_5. Another 3500 ohm resistor R_3 is placed in the grid return of VT_2, thus the total grid voltage for VT_1 is formed across points A and B and the total grid voltage for VT_2 is formed across points B and C. Each of these voltages is opposed by a bucking voltage that is formed across R_5. This occurs because the signal voltages from each grid return circuit must pass through R_5. When considering the positive half cycle of the signal voltage, it is necessary to realize that the negative half cycle is being formed across R5. This results in a balancing action because any difference in output voltage which from one-half of the phase inverter will be counterbalanced by an increase or decrease, as the case may be, of the opposing voltage from the other half of the inverter. Thus a degree of automatic balancing takes place which will compensate for small voltage differences in the output voltage of the phase inverter. The circuit is slightly degenerative, reducing the gain slightly, but improved performance compensates for the loss in driving power and distortion in the output stage. This circuit is applicable not only to dual triodes but also to single triodes operating in similar circuits.

Phase inversion in Fig. 19-15 takes place in the second detector stage of the receiver. Two .1 megohm resistors are connected across the audio output of the second detector with their common tap grounded. The effect is essentially the same as a center tap transformer. The demodulated output of the second detector divides itself equally across these resistors. Two condensers, C_1 and C_2 having a value of 250 $\mu\mu$fd are used as rf filter condensers to reduce the rf potential left in the demodulated second detector output. Coupling condensers C_3 and C_4 may be of any value. .01 μfd being the value generally used.

This circuit, while of low output, has the advantage of perfect balance since the output is not dependent upon tube characteristics.

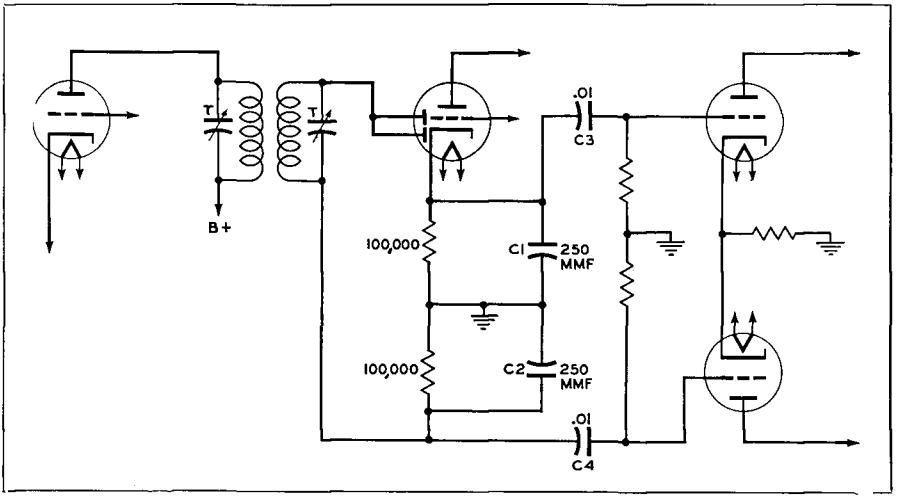

Fig. 19-15. Circuit diagram of a phase inverter which is somewhat unusual. Phase inversion takes place in the second detector stage of receiver.

A Cross Coupled Input and Phase Inverter Circuit

The circuit of the cross coupled stage is shown in Fig. 19-16. Tubes V_1 and V_4 are connected as cathode followers. The grid voltage of V_2 is the difference of the output voltage of V_1 and V_4 and the grid voltage of V_3 is equal in magnitude to that of V_2 but opposite in phase. If symmetry of tube and circuit parameters is maintained the voltage at the plate of V_2 is equal in magnitude to the voltage at the plate V_3 but differs in phase by 180 degrees. When an input signal is applied to the grid of V_1 only the output voltage of V_1 as a cathode follower appears across R_{k1} and no signal is generated across R_{k2}. If a positive voltage is applied to the grid circuit of V_1 the voltage between cathode of V_1 and ground increases. This increase in cathode voltage appears as a positive grid voltage for V_3 and as a negative grid voltage for V_2. In this manner equal and opposite grid signals and hence plate voltages are produced in V_2 and V_3. Since the circuit is symmetrical the same conditions hold if all of the input signal is applied to the grid circuit of V_4, except that the phase of the output voltages is reversed. When the signal is divided equally between the two grids as a push-pull input, the voltage between the cathodes of V_2 and V_3 is the same as in either of the above cases except that it is now equally divided between R_{k1} and R_{k2}. Since these conditions exist regardof whether the input signal is applied to one input grid or divided equally between them, the cross coupled circuit may act as a push-pull input stage or a balanced phase inverter.[1]

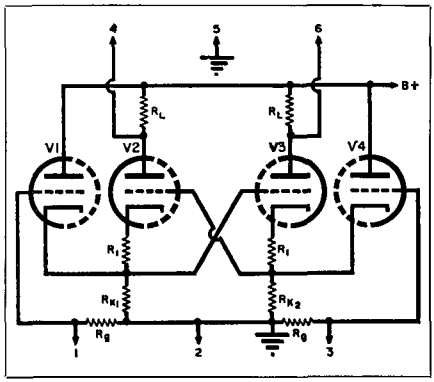

Fig. 19-16. Basic schematic at the cross coupled input circuit.

This fact can be shown in practice by applying a sine wave signal between the two input terminals by means of a center tapped transformer winding and by connecting the output terminals to the deflection plates of a cathode ray oscil-

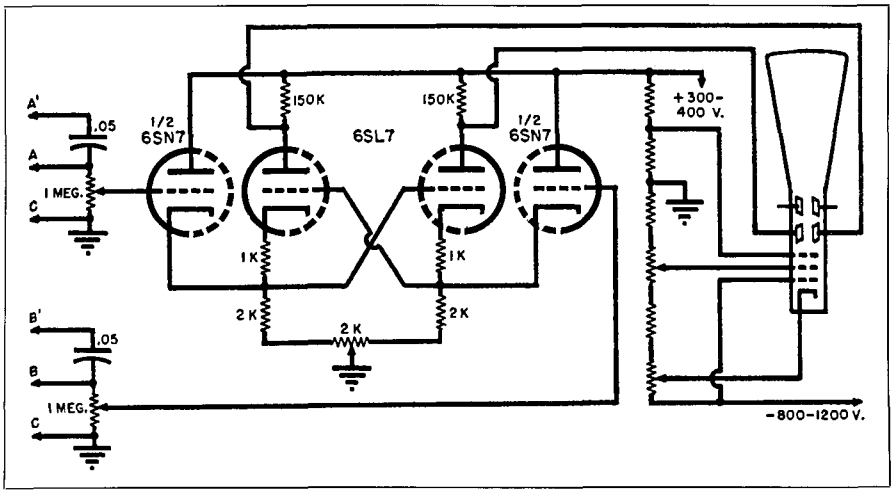

Fig. 19-17. Direct coupled oscilloscope amplifier suitable for push-pull or single ended input or for viewing potential between two points above ground.

loscope as shown in Fig. 19-17. No change in the pattern on the cathode ray tube can be observed when the ground terminal of the cross coupled stage is connected to the center tap of transformer winding or to either input grid.

It may be shown that the gain of the cross coupled stage is given by Equation (1):

$$A = \frac{\mu_1(2\mu_2 + 1)\, R_k\, R_L}{[R_k\,(\mu_1 + 1) + r_{p^1}]\,[R_L + r_{p^2} + R_1\,(\mu_1 + 1)\,] + R_k r_{p^1}\,(2\mu_2 + 1)} \quad . \; . \; . \quad (1)$$

where A is the mid frequency gain—the ratio of the total output to total input μ_1 and r_{p1} are the amplification factor and plate resistance of V_1 and V_4 and μ_2 and r_2 are the amplification factor and plate resistance of V_2 and V_3. All values refer to Fig. 19-16.

If the same signal is applied to both input terminals with respect to ground, the output voltage will be zero. Hence, a source of voltage, such as a phonograph pickup, may be connected between terminals 1 and 3 and any hum pickup between the voltage source and ground will not produce hum in the output signal. This is a valuable feature of an input circuit for audio amplifiers and instruments such as oscilloscopes and vacuum tube voltmeters.

The cross coupled circuit has many advantages over conventional circuits as the input stage in a balanced dc amplifier. When the input is single ended the stage acts as a phase inverter giving an output signal balanced with respect to ground. The phase of the output voltage is determined by which grid is used for the input signal. Complete inversion for dc and ac components is accomplished without the necessity of critical adjustments of resistors or bias voltages.

In actual practice V_1 and V_4 are identical medium or low mu triodes while V_2 and V_3 are identical high mu triodes. One combination of tubes which gives quite satisfactory operation is a 6SN7 tube for V_1 and V_4 and 6SL7 tube for V_2 and V_3.

Application in Instruments

The cross coupled circuit using the above tube combination makes a very good balanced amplifier for a cathode ray oscilloscope. Circuit values and method of connecting such an amplifier to a cathode ray tube are shown in Fig. 19-17. The circuit with the values shown will have a voltage gain of approximately sixty. The balance control in the cathode circuit of the amplifier allows compensation for inequalities of tube characteristics and serves as a positive positioning control having no time lag. This oscilloscope will permit many special applications not afforded by the usual oscilloscopes and will in addition serve as a general purpose unit.

Signals with respect to ground may be observed by connecting in the usual way to either set of input terminals. The pattern on the screen may be inverted by changing the input terminals used. By connecting the input to terminals A-C or B-C the dc as well as the ac component of the input can be viewed. If only the ac components of the signal are to be observed, terminals A'-C or B'-C may be used. If terminals A and B or A' and B' are connected to the same input signal the resultant output signal can be made zero by equal settings of the input attenuators. As long as equal settings are maintained on the two input attenuators and the ground terminal of the oscilloscope is connected to the ground of the circuit under test, terminals A' and B' may be connected to any two points in the circuit under test just as if they were the terminals of an instrument isolated from ground such as a voltmeter. This feature makes practical many measurements that are nearly impossible with conventional oscilloscopes because of the hum voltage encountered. Observation of the voltages appearing grid-to-grid or plate-to-plate in pushpull amplifiers can be readily made with an oscilloscope utilizing this input circuit.

It may also be noted that an oscilloscope using a cross coupled input stage in the vertical amplifier may be used for

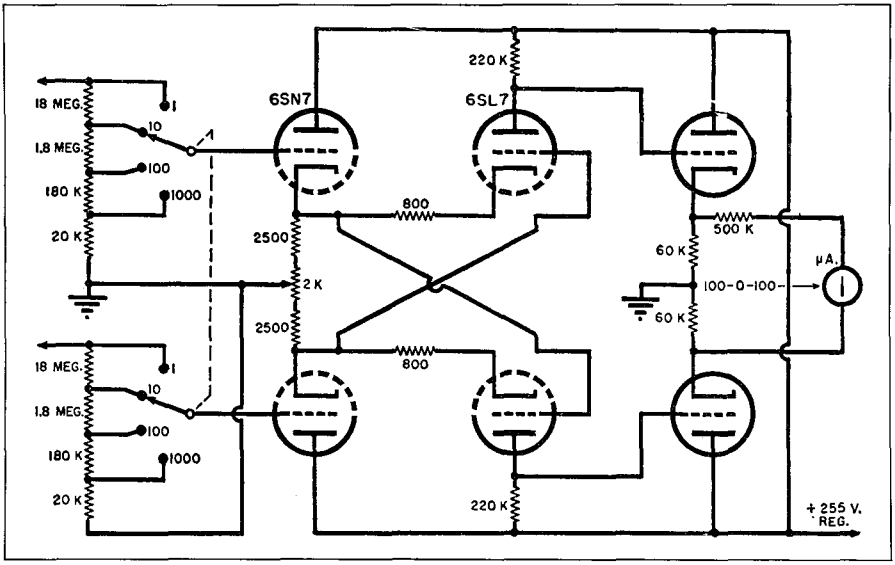

Fig. 19-18. Basic circuit of a dc vacuum tube voltmeter.

timing purposes by applying timing pulses to one input grid and the signal under observation to the other grid. The timing pulses will appear superimposed on the image of the desired signal.

The advantages that have been listed for the cross coupled stage as an input circuit may be utilized in the construction of a dc vacuum tube voltmeter. Such a unit is shown schematically in Fig. 19-18. It consists of a cross coupled input stage with input attenuator direct coupled to pushpull cathode followers for low impedance output. A sensitive dc voltmeter is placed between the two cathodes to measure the amplified dc voltage appearing at the output. The voltmeter used in the circuit diagram shown in Fig. 19-18 has a zero center scale and a sensitivity of 10,000 ohms per volt with a series resistor to give a scale of ± 50 volts. Since the cross coupled stage used together with the cathode followers gives an overall gain of fifty, the basic meter scale is 1.0 volt. With these values in the circuit the instrument is exceptionally stable and easy to operate. A balanced decade attenuator at the input terminals gives voltage range of ± 1.0, 10, 100, and 1000 volts. Additional ranges of ± 0.5, 5., 50 and 500 volts may be obtained by using a switch to change the voltmeter range from ± 50 to ± 25 volts. Voltages that slightly exceed any scale range may be read by displacing the zero setting of the meter to the left end of the scale rather than center by means of the balance control. The maximum voltage that may be measured on any scale is doubled by this change.

This vacuum tube voltmeter can be used to measure dc voltages between any two points in the circuit just as described in the case of the oscilloscope. This feature makes it well adapted to measuring voltages in high impedance circuits. The center scale meter is very convenient when measurements are being made of voltages which reverse polarity, as in the case of discriminator or bridge outputs near balance.

Audio Applications

The cross coupled stage can serve many purposes in audio amplifiers. It may be used as a phase inverter to feed a pushpull power amplifier and at the same time serve as a mixer for any two input signals such as microphone and phono or microphone and radio tuner.

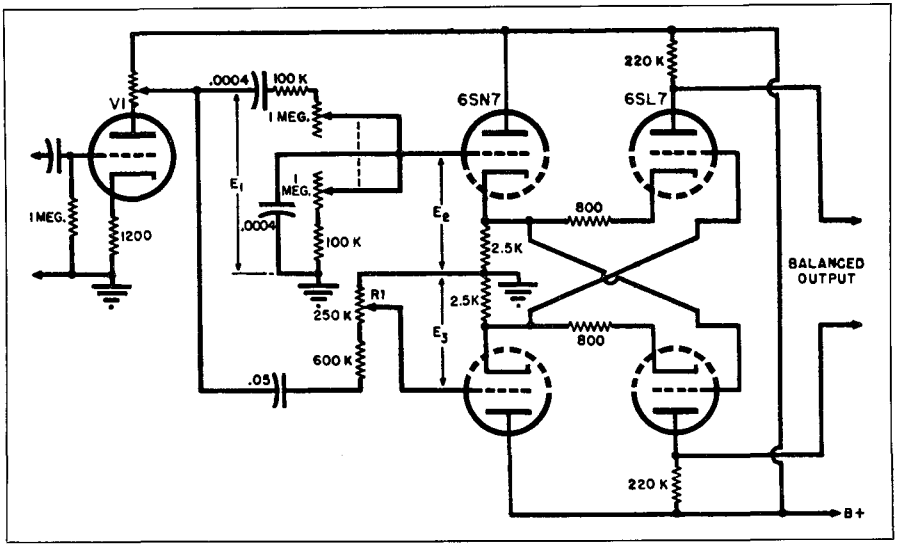

Fig. 19-19. Tone control circuit using cross coupled input stage.

The amplifier shown in Fig. 19-21 is capable of producing 15 watts of high fidelity output from either of two input signals. It is made up of a cross coupled input stage followed by a two stage push-pull power amplifier with negative voltage feedback. The feedback voltage, obtained from a center tapped ten per-cent feedback winding on the output transformer, is fed to the driver stage input circuit through the cathode bias resistors. The actual feedback factor B, may be changed from zero to .04 by means of the ten thousand ohm variable resistor between the two cathodes of the (6SL7) tube. This permits a gain variation of 9 to 1. The effective internal impedance of the amplifier is changed from 50,000 ohms with no feedback to about 50 ohms with the full amount of feedback applied. The peak voltage at the input required to give 15 watts output varies between 15 and 150 millivolts according to the amount of feedback used.

Some unusual tone control circuits are possible with the use of this circuit. As noted before the output voltage is proportional to the difference of the two input signals. This characteristic makes it possible to obtain an output voltage from the cross coupled stage proportional to the difference in transmission characteristics of any two networks fed from a common source. A tone control circuit making use of this property is outlined in Fig. 19-19.

The output voltage of tube V_1 is fed to one grid of the cross coupled stage through a pure resistance attenuator and to the other grid through the RC network shown in Fig. 19-20. When the attenuator, R_1, in the resistance branch is set to zero the total input to the cross coupled stage will be that of the RC network. The transmission characteristics of the RC network as a function of frequency are shown in Fig. 19-22. The maximum output of the network and the point of zero phase shift occur at the

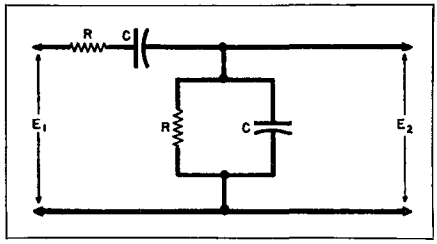

Fig. 19-20. RC network used in the above tone control circuit.

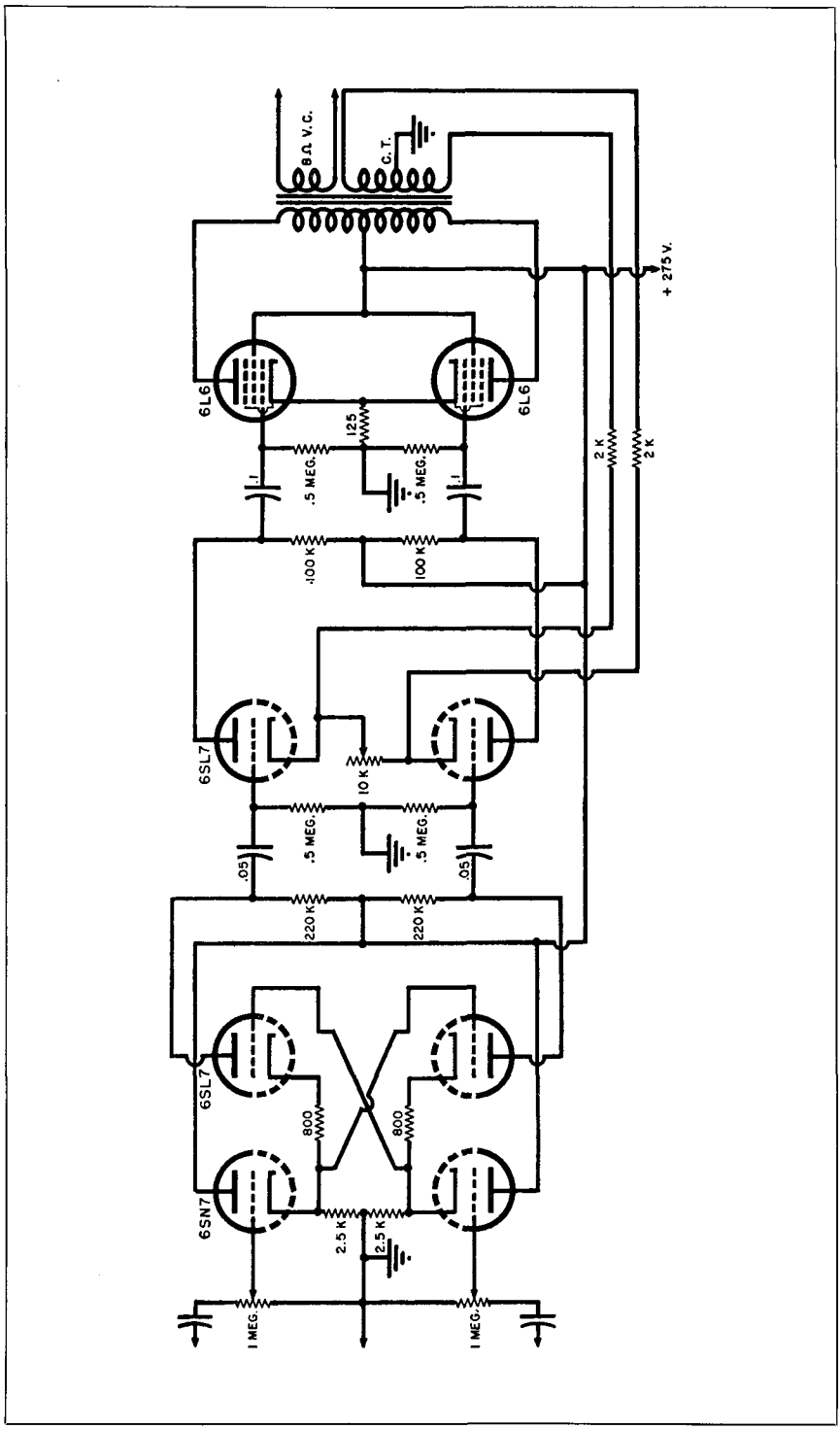

Fig. 19-21. Circuit diagram of a complete audio amplifier using a cross coupled input stage.

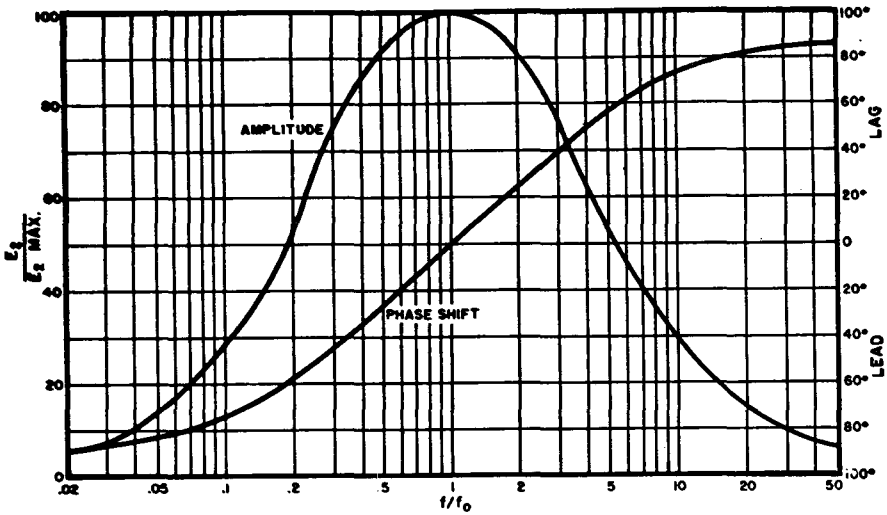

Fig. 19-22. Transmission characteristics of the circuit shown in Fig. 19-20.

value of $f/f_0 = 1$, where f_0 is the frequency at which $R = X_0$ (or $f_0 = \frac{1}{2\pi RC}$). This peak in the curve may be determined by choice of R and C. In the circuit of Fig. 19-20 this frequency is adjustable from 360 cycles to 4000 cycles by means of a dual one megohm potentiometer. When the attenuator in the resistance branch is adjusted so as to introduce a small fraction of the original input to the second grid, the total input voltage of the cross coupled stage is the vector difference of the two signals. The amplitude-frequency response curve of the output is changed in such a way as to reduce the amplitude at the peak of the curve and to increase the amplitude at both sides of the peak. This broadening of the response curve may be continued by increasing the fraction of the original input voltage through the resistance branch. When the input from the resistance branch reaches a value of one-sixth of the original input signal the combined output is linear. Increasing the input from the resistance branch beyond this value inverts the response curve and results in minimum output at f_0. When the input from the resistance branch reaches a value of one-third of the original input the response is zero at f_0. Experimentally obtained response curves for any value of f/f_0 are shown in Fig. 19-24. A value of $f_0 = 600$ to 800 cycles gives a set of frequency responses that is pleasing for classical music.

Cross-coupled Expansion

A novel expander or compressor system has been made incorporating the

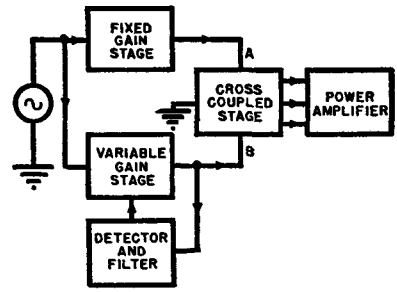

Fixed stage gain = 20 = A
Variable stage gain = 19 to 10 = B
Output of cross coupled stage = $K(A\text{-}B)$ = K to $10K$
Thus 20 db. of expansion may be obtained with an amplifier with a gain ratio of less than 2 to 1.

Fig. 19-23. Block diagram of expander circuit, showing how 20 db of expansion may be obtained with an amplifier with a gain ratio of less than 2 to 1.

cross coupled stage. Expansion or compression is obtained by making the gain of an amplifier vary directly or inversely with the amplitude of the input signal. This is usually accomplished by amplifying and rectifying a portion of the input signal to obtain a bias voltage proportional to input signal level. This bias voltage is used to control the gain of one or more variable mu tubes in the amplifier. When changes in gain of 14 to 20 db. (5 or 10 to 1) are used, it is difficult to avoid distortion and instability. Fig. 19-23 shows a block diagram of an expander circuit which requires only a small change in gain of the controlled tube to give variations in output voltage of as much as 10 to 1 or more.

Two amplifiers, identical except that the gain of one of them is controlled by the input signal level, have their inputs in parallel and the output signals are fed to the two input grids of the cross coupled stage. As an example of the operation of the system, assume that the gain of the fixed stage is 20 and that the gain of variable stage is 19 at some low level of input voltage. At this low level of input voltage, the difference in the output voltages of the two stages equals the input. At some increased input level the gain of the variable stage will drop to 17 and the difference of the output of the two tubes will be three times the input signal. The output voltage of the cross coupled stage, as previously mentioned, is proportional to the difference of the two input signals. Thus it is possible to get a change of 3 to 1 in output signal of the cross coupled stage with about ten per-cent variation of gain in the variable stage. Similarly a variation of 10 to 1 in output signal may be obtained with a gain variation in the variable stage of 2 to 1.

Compression may be obtained by making the low level gain of the fixed stage greater than that of the variable stage, and by obtaining the bias control voltage from the output of the cross coupled stage. The phase shift in the fixed and variable gain stages should be as nearly the same as possible.

Conclusions

Because of its versatility and relative simplicity, the cross coupled circuit should be a valuable tool for the circuit design engineer. The uses of the cross coupled stage described here are repre-

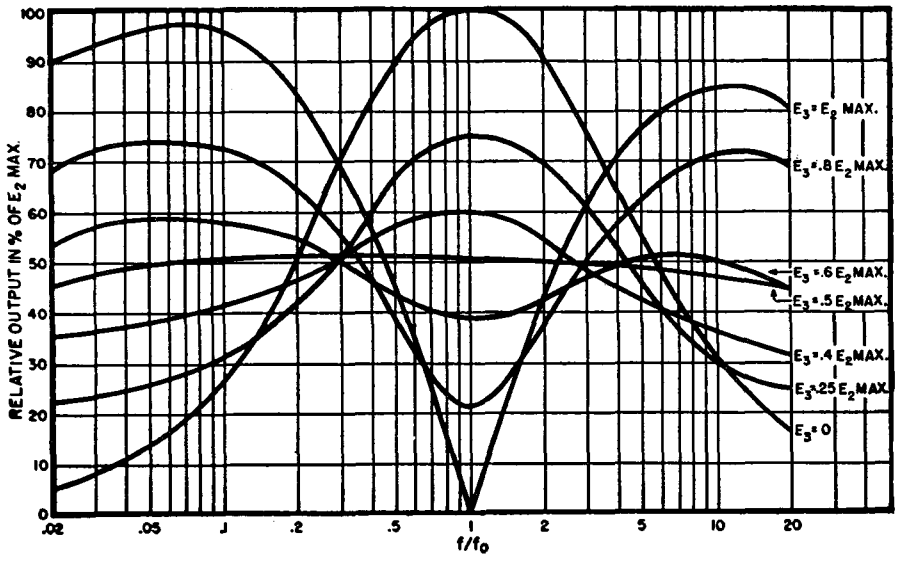

Fig. 19-24. Frequency response for circuit of Fig. 19-19 for different settings of R_1.

sentative of a large number of possible applications of this circuit to special instrumentation and quality audio amplifiers.

Pre-amplification

Preliminary amplification (the Pre-amplifier) is used to build up the minute output voltages of microphones, pickups, and other reproducing equipment to a level sufficient to drive low gain circuits and driver stages. In addition it serves to provide a means of isolating the individual circuits, thus reducing cross-talk and possible circuit inter-action.

Two stages of audio amplification are employed in most pre-amplifiers. Resistance-coupling is used in order to allow an essentially flat frequency response from 30 to well over 10,000 cycles per second. Input and output transformers are often used as impedance matching and coupling mediums. If used they must be completely shielded and enclosed in metal cases. The input transformer may be mounted in a slotted or grooved base in such a manner as to permit orientation, if necessary, to reduce hum pickup. Input impedances are usually 50 to 250 ohms for low impedance microphones, etc. The majority of broadcast studios are equipped with velocity microphones, operating into a 250 ohm matching transformer, this value is used for all studio input circuits and is favored by most engineers over the 50 ohm termination.

The tube lineup of preamplifiers varies somewhat, depending on the manufacturer's individual specifications. High gain pentodes, such as the 6J7, 77 and 1603 have been, and still are popular. The 1603 affords an improved signal-to-noise ratio over that of the 77 with a slight increase in gain (about 1.5 db).

Since only a part of the total gain realized by two such tubes is actually needed, they are commonly connected as triodes to allow increased circuit stability.

Current requirements are very small, the total heater drain being approximately 600 milliamperes, with the plate current running about 1 milliampere for the first stage and from 4 to 5 milliamperes for the second stage. The plate voltage supply should be capable of delivering 180 volts at good regulation. Any form of rectification as well as a battery supply may be used provided adequate filtering is employed. The overall gain of commercial pre-amplifiers is approximately 40 to 50 db and is, for most applications, entirely adequate. The total amount of harmonic distortion should be kept to less than 5% and the noise level kept below —50 db. See Chapter 20.

Hum Isolation

The extremely low audio levels encountered at the input circuit make this part of the amplifier especially susceptible to hum pickup from nearby a.c. sources. For this reason the filament transformers as well as the rectifier plate supply components should be placed as far away from the amplifier as possible to eliminate the possibility of stray field pickup. A separate filament transformer is recommended for a preamplifier in order to minimize the possibility of circuit interaction and to allow individual adjustment of the filament hum control.

All audio leads should be kept away from alternating current circuits. Bonding to a common ground bus and lacing leads together does much to reduce pickup from ac fields.

Microphonics

Tube microphonics are reduced to a minimum by (1) employing tubes of a quiescent-heater type, (2) by mounting the tube sockets and transformer mountings on sponge rubber, and (3) mounting the tubes in a horizontal position so that mechanical agitation will

[1]Van Scoyoc, J. N., "A Cross Coupled Input and Phase Inverter Circuit." Radio-Electronic Eng. edition of Radio & Television News, Nov. 1948.

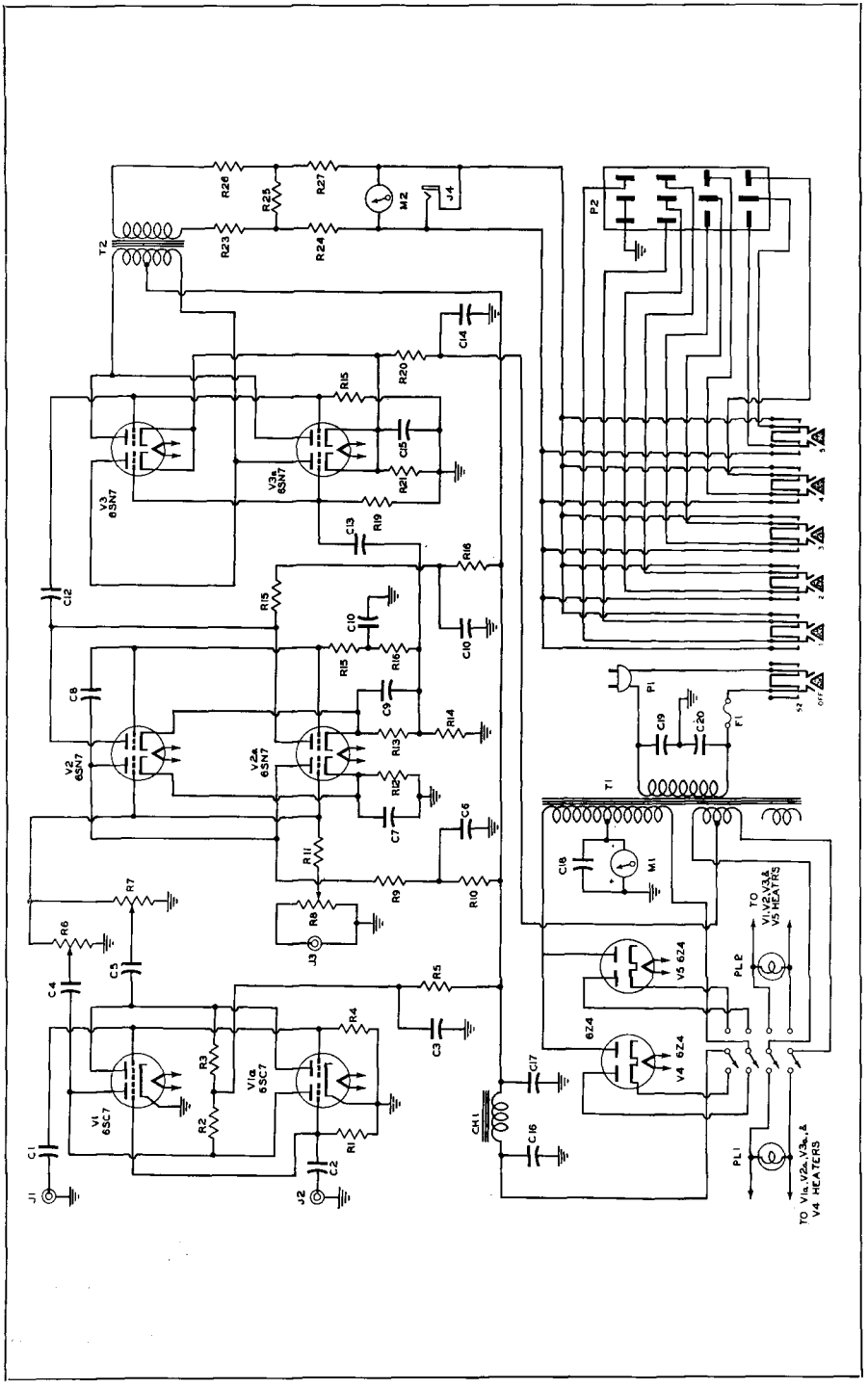

Fig. 19-25. Complete circuit diagram of amplifier.

have less vibrational effect on the grid structures. Such mounting also allows access to the tubes through a removable cover plate on the front panel of the amplifier. Audio racks in which the preamplifiers are mounted should be well grounded, completely shielded, and placed several feet from the studio wall to eliminate microphonic conditions caused by mechanical or building vibration, to facilitate equipment maintenance from the rear of the racks, and to insure adequate ventilation.

Program or Line Amplifiers

The purpose of a program or line amplifier is to build up the output level of the mixer or pre-amplifier to a level sufficient to feed a telephone loop or transmitter speech amplifier. A level of zero to +10 db is recommended for feeding a normal broadcast line, and as a 6 db isolating coil usually is employed at the studio end of the line an over-all level of approximately plus 16 db is required. Since a 6 to 10 db mixing transformer is also used in the studio circuit, the program amplifier must supply an over-all gain of approximately 70 db.

The typical line amplifier is a three-stage affair using pentode tubes connected as triodes and employing resistance-capacitance coupling in the first two stages. A push-pull output stage (resistance-capacitance-transformer coupled) results in greater output with practical elimination of even harmonic distortion. As in preamplifiers, the frequency response must be flat within plus or minus 1 db from 30 to well over 10,000 cycles and in such applications as FM and other high-fidelity circuits should extend to at least 15,000 cycles per second. Noise and distortion should be kept to a minimum (as low as —60 db and .5% respectively). Frequency response and the signal-to-noise ratio are improved through utilization of inverse feedback. A feedback voltage is taken from the plate circuit of the output stage and fed through a phase reversal of 180 degrees to the grids of the input stage. Input and output transformers are fully shielded to prevent hum pickup and centertapped to permit matching to either 250 or 500 ohm circuits.

A volume indicating (db) meter is stalled across the secondary of the input transformer, or, if desired, a dual control may be placed across the push-pull grid circuit of the output stage. In either case the control should be of the constant-impedance type such as the "T" or "H" to prevent the occurrence of undesirable attenuation of the higher frequencies due to introduction of circuit mismatch and distributed capacity effects such as are present when a varying-impedance type of control such as the "L" is used.

Although a separate filament transformer is recommended and generally used, the line amplifier may derive its plate voltage from the same supply source used by the preamplifiers.

A volume indicating (db) meter is usually mounted on the amplifier panel

Parts List for Fig. 19-25.

R_1, R_4—5.6 megohm, ½ w. res.
R_2, R_3, R_{19}, R_{22}—.27 megohm, 1w. res.
R_5, R_{20}—47,000 ohm, 1 w. res.
R_6, R_7, R_8—1 megohm pot.
R_9—.1 megohm, 1w. res.
R_{10}—22,000 ohm, 1 w. res.
R_{11}—1 megohm, ½ w. res.
R_{12}—3900 ohm, 1 w. res.
R_{13}—1200 ohm, 1 w. res.
R_{14}, R_{17}, R_{18}—12,000 ohm, 1 w. res.
R_{15}, R_{16}—470,000 ohm, ½ w. res.
R_{21}—470 ohm, 2 w. res.
R_{23}, R_{24}, R_{25}, R_{27}—56 ohm, ½ w. res.
R_{26}—1100 ohm, 1 w. res.
Instead of R_{23}, R_{24}, R_{25}, R_{26} and R_{27}, a 4 db. 500/500 fixed pad (Daven H-154 or equivalent) may be used.
C_1, C_2—.005 μfd., 300 d.c. w.v. mica cond.
C_3, C_6, C_{11}—10 μfd., 450 v. elec. cond.
C_4, C_5, C_8, C_{12}, C_{13}—.01 μfd. 600 v. cond.
C_7, C_9, C_{15}, C_{18}—20 μfd., 25 v. elec. cond.
C_{10}, C_{19}, C_{20}—.05 μfd., 600 v. cond.
C_{14}—.1 μfd., 400 v. cond.
C_{16}, C_{17}—20 μfd., 450 v. elec. cond.
S_1—4 pole double throw sw.
S_2—6 or 8 button d.p.d.t. sw., Mallory 2196 or 2198, or equivalent
T_1—Power trans., 480 v.c.t. @ 40 ma., 6.3 v.c.t. @ 2 a., 5 v. @ 2 a. (not used)
T_2—Output trans., push-pull low level plates to line (15,000 ohms to 500 ohms)
CH_1—6 hy., 40 ma. filter choke
M_1—0-30 ma. d.c. meter, Weston model 301 or equivalent
M_2 Output Meter — 10 + 6 db.
P_1—A.c. input plug
Pa—12 contact socket, Jones S-312 FP; 12 contact male receptacle, Jones P-312 CCT or equivalent
BL_1—Green Jewel Light
PL_2—Red Jewel light
These two lights use 12-16 v. candelabra lamps.
V_1 V_1a—6SC7 tubes
V_2, V_2a, V_3, V_3a—6SN7-GT tubes
V_4, V_5—84/6Z4 tubes

with its associated level-adjusting switch and bridged across the output line in series with a 5000 ohm resistor. This resistor is generally removed on installation of the amplifier and the studio console VI meter connected in its place. Normal plate currents encountered in the studio or line amplifier are approximately 1 milliampere for the first stage, 2 milliamperes for the second, and 40 to 45 milliamperes in the output stage.

Remote Amplifier

One of the most versatile circuits developed in recent years for a remote radio line amplifier is one first described (Radio-Electronic Eng. Edition of Radio News, Mar., 47). It is ideally suited to recording, public address and commercial broadcasting.

Today, crystal microphones ranging in price from $12.00 to $30.00 possess many advantages over the accepted velocity and dynamic microphone to negate their use in at least one phase of broadcast operation. That is the remote point pickup. Among the many virtues of the crystal microphone that make it a natural for remote broadcast are:

RUGGEDNESS—The crystals can take much more abuse without electrical impairment than the velocity and dynamic types. Simpler and less troublesome is the crystal mike cable which consists of only one shielded conductor as against two wire shielded cables for the velocity and dynamic types.

FIDELITY—For remote point pickups, the crystal is indistinguishable from the velocity and dynamic mikes even with extreme cases of 100 foot cables.

HIGH OUTPUT—Together with the crystal's high impedance simplifies the input circuit of the remote amplifier.

EASY REPLACEMENT—Its loss at the last moment is not great because a mike or two can generally be borrowed from some close at hand p.a. system.

Having disposed of the microphone problem there is left the most important and troublesome item, the remote amplifier itself. Commercial remote amplifiers and the necessary velocity or dynamic mikes are quite costly, particularly for the smaller stations, when it is considered that most remote amplifiers are left at the pickup points for repeat programs. They are also a bit complex in operation for the many remotes that are manned by non-technical clients. In the event of trouble, such as a defective tube, the broadcast is generally lost.

It is also impossible to selectively feed two or more stations, recording studios or monitoring points simultaneously because of either mechanical or electrical deficiencies in the system.

In an effort to meet these problems of air loss time, ease and confidence of operation, and versatility of program feeding, a remote line amplifier was designed (Fig. 19-25) having many unorthodox features such as:

(1) Push button selection of any subscribed station, recording or monitoring lines. Amplifier is turned on simultaneously.

(2) Similar feed to different lines by simply pressing the desired buttons together.

(3) Automatic short-circuiting of all unused lines. This prevents cross talk and other extraneous noises from entering the program line. This feature also permits loop resistance checks of the program lines to be made from station studios and recording offices before actual program time in order to ascertain whether a line is shorted, open or partially blocked. Since each fixed telephone line has a definite loop resistance, any variation of over 10% would indicate trouble which the telephone company can often clear one hour or more before program time.

(4) Elimination of the master gain control and the use of extended fader rotation for smooth fades does away with an additional noise source and operational confusion.

(5) An activated spare tube bank with an emergency toggle switch located on the chassis that substitutes a

complete set of tubes in the event of tube noise or failure is provided.

(6) A plate current meter that indicates any abnormalities, such as emission drop-off, excess capacitor leakage, etc., well in advance of actual breakdown is indicated.

A six-button selector switch feeds the audio output into five designated broadcast, recording or monitoring channels as selected. Depressing any of these five buttons also turns the amplifier on. The sixth button turns the amplifier off. For additional channels, an eight button selector switch should be used.

Total plate current is indicated by the meter. Normal current is 24 ma. Red pencilled limit marks are drawn on the scale at 15 and 30 ma. The db meter is a high-speed, slow decay type.

Circuit Analysis

A grid current biased 6SC7 dual triode, V_1, is employed as an electronic mixer. Distortion and hum injection is lower if this mode of operation is used instead of cathode biasing. Crystal microphones are coupled to the grids of V_1 through blocking capacitors C_1 and C_2. The mike inputs as well as phono are introduced through closed circuit connectors. This precaution eliminates live grid howls in the event of disconnected microphones and turned-up potentiometers.

The 6SC7 plates are terminated in their own plate loads R_2 and R_3 and are fed into parallel potentiometers R_6 and R_7. For gain and attenuation smoothness the ordinary graphited pot is unsurpassed and can be expected to give many years of noise free operation in this audio mixing circuit. No master gain control will be found necessary or desirable since the inclusion of one means another possible noise source and greater operating complexity.

The phono pickup is fed into the input triode section of the 6SN7-GT tube, V_2, through an isolating resistor R_{11}. The other triode section of V_2 is employed as a driver-phase-inverter, rendering 6 db of useful gain and 14 db of feedback within itself which provides perfect symmetry of voltage throughout the audio spectrum across the output tube grids of V_3. The purpose of the resistance-capacitance filter R_{15}, C_{10} is to eliminate the ac component from the cathode coupling resistor R_{14}.

The push-pull output stage using a 6SN7, V_3, is conventional. This stage is capable of developing an undistorted output directly across the 500 ohm loaded secondary of T_2, at a level of plus 18 db. When two or more lines are bridged across the output the power requirements increase. However, the reserve power output of this push-pull stage is sufficient to feed three lines simultaneously at plus 2 db at ½ of 1 per-cent total harmonic distortion. The 4 db symmetrical T pad is interposed between the secondary of T_2 and the feed lines to equalize any reactive effects in the telephone lines and also to minimize impedance mismatches when more than one line is used at one time.

Fig. 19-25 discloses that on S_2 the buttons 1 through 5 are in the out position, therefore the feed channels of these buttons are shortcircuited. Depressing any of these buttons opens the respective feed channels and places them across the audio output from T_2.

A cathode type, 84/6Z4 rectifier is used which heats simultaneously with the amplifier tubes thus preventing voltage surges.

Because these close-spaced rectifier tubes sometimes short circuit from cathode to plate, S_1 is wired in such a manner as to guard against this trouble since both rectifier tube elements except the heaters are paralleled and a shorted rectifier tube would negate the effectiveness of the tube change switch S_1. Referring to Fig. 19-25 note that S_1 is wired so that two poles are for heater bank switching, the third pole switches the cathodes of the 84/6Z4s and the fourth pole switches the plates of the 84/6Z4 tubes. Thus, a shorted 84/6Z4 is completely isolated when the switch S_1 is thrown. A shorted tube

would blow the line fuse, therefore the tube change switch S_1 must be thrown before replacing the blown fuse.

Ample plate filtering is employed in addition to the added filters and decoupling circuits in each tube, therefore single section choke CH_1 is sufficient. The milliammeter is bypassed by C_{13} because the center tap of the high voltage winding carries considerable ac and goes through a rather long meter impedance path before going to ground.

The center tap of the heater winding is returned to the cathode of V_3 through a filter comprised of R_{20} and C_{14}. This arrangement places the heater winding at a plus potential of 8 volts and reduces to a minimum any hum due to cathode leakage in tubes V_3 and V_{3a}.

Incoming program lines are connected by a male plug to P_2. An external ground, if necessary, is also connected through P_2.

The circuit has a usable microphone gain of about 70 db and about 30 db for the phonograph input. This permits the potentiometers to be turned up 60 to 85 per-cent of full rotation using crystal mikes having a rated output of —45 to —60 db. Exceptional smooth gain variation for mixing fade-ins and fade-outs is thus attained.

The noise level is down —62 db relative to a 500 ohm resistance loaded output of plus 6 db. Frequency response is flat within one-half db from 100 to 9500 cycles. A 50 cycle limit within one-half db can be obtained by using larger values of audio coupling capacitors. This low frequency feature is not preferred or fully desirable since more equalization together with its attendant ills would be required at the other end of a program line. For lines of 5 to 10 miles, or even longer, it would be expedient to decrease the audio coupling capacitors even further.

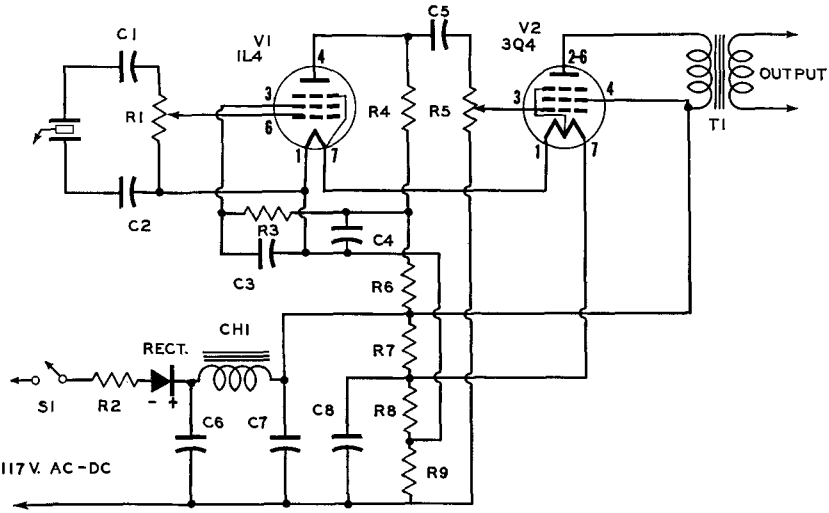

R_1—250,000 ohm pot.
R_2—25 ohm, ½ w. res.
R_3—700,000 ohm, ½ w. res.
R_4—150,000, ½ w. res.
R_5—500,000 ohm pot.
R_6—50,000 ohm, ½ w. res.
R_7—1350 ohm, 5 w. res.
R_8—300 ohm, ½ w. res.
R_9—40 ohm, ½ w. res.
C_1, C_2, C_5—.02 mfd., 200 v. cond.
C_3—.01 mfd., 200 v. cond.
C_4—.25 mfd., 200 v. cond.
C_6, C_7, C_8—40=20=20=mfd., 200=200=20 v. elec. cond.
CH_1—6 henry, 500 ohm lter choke or speaker eld coil
T_1—Output trans. 9000 ohm-to-v-c.
Rect.—100 ma. selenium recti er
S_1—S.p.s.t.sw.
V_1—1L4tube
V_2—3Q4 tube
Speaker—Any size or type may be used (a 5. PM type is preferred)

Fig. 19-26. Schematic diagram. Maximum power output is approximately 240 milliwatts.

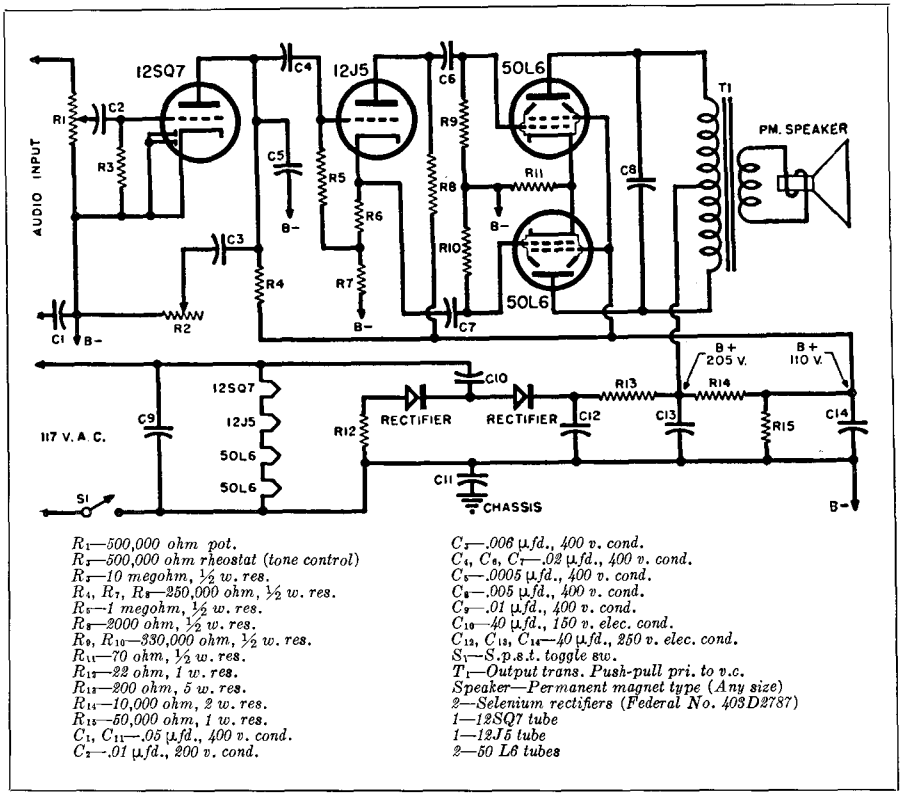

R_1—500,000 ohm pot.
R_2—500,000 ohm rheostat (tone control)
R_3—10 megohm, ½ w. res.
R_4, R_7, R_8—250,000 ohm, ½ w. res.
R_5—1 megohm, ½ w. res.
R_6—2000 ohm, ½ w. res.
R_9, R_{10}—330,000 ohm, ½ w. res.
R_{11}—70 ohm, ½ w. res.
R_{12}—22 ohm, 1 w. res.
R_{13}—200 ohm, 5 w. res.
R_{14}—10,000 ohm, 2 w. res.
R_{15}—50,000 ohm, 1 w. res.
C_1, C_{11}—.05 μfd., 400 v. cond.
C_2—.01 μfd., 200 v. cond.
C_3—.006 μfd., 400 v. cond.
C_4, C_6, C_7—.02 μfd., 400 v. cond.
C_5—.0005 μfd., 400 v. cond.
C_8—.005 μfd., 400 v. cond.
C_9—.01 μfd., 400 v. cond.
C_{10}—40 μfd., 150 v. elec. cond.
C_{12}, C_{13}, C_{14}—40 μfd., 250 v. elec. cond.
S_1—S.p.s.t. toggle sw.
T_1—Output trans. Push-pull pri. to v.c.
Speaker—Permanent magnet type (Any size)
2—Selenium rectifiers (Federal No. 403D2787)
1—12SQ7 tube
1—12J5 tube
2—50 L6 tubes

Fig. 19-27. Schematic diagram of 4-tube, 117 volt ac-dc audio amplifier.

Many functional possibilities of this amplifier outside the realm of broadcasting should suggest themselves in the general field of audio applications.

MISCELLANEOUS AMPLIFIERS

A Simple Two Tube Phono Amplifier

While the maximum output of this amplifier is not as great as that of the usual single beam power amplifier it is, nevertheless, entirely adequate to provide a good volume level in the average room.

Reference to the schematic Fig. 19-26 shows a stage of voltage amplification using a type 1L4 tube which drives a 3Q4 to full output. The dc filtering circuit is of the inductance-capacity type and provides an extremely low hum level.

A speaker field winding may be substituted for the filter choke. It will be noticed that .02 μfd condensers have been placed in series with each lead of the crystal pickup. This serves to prevent line voltage from being developed between the pickup arm and grounded objects.

Power is supplied with a half-wave selenium rectifier in a conventional voltage divider circuit. Provision has also been made for an input gain control which may be pre-set at any level desired and a manual volume control R_5 used for selecting desired output.

10 Watt ac-dc Audio Amplifier

This tranformerless power supply, four tube audio amplifier, having a maximum power output of 10 watts has a recent feature of incorporating a

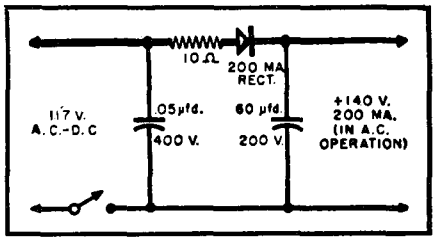

Fig. 19-28. Schematic diagram of an ac-dc selenium rectifier power supply which can be used to operate a 6-watt audio amplifier, using same circuit shown in Fig. 19-27.

miniature selenium rectifier in place of a conventional vacuum tube. Use of selenium rectifiers not only enables the amplifier to weigh less, but it occupies less space and due to the long life and high current carrying capacity of this rectifier, improves its performance and reduces power supply failure to a minimum. The circuit is sensitive enough for crystal microphone or phonograph pickup, with only 10% distortion between the frequencies of 40-15,000 cycles at 8 watts output.

As indicated on the schematic diagram Fig. 19-27 this amplifier consists of three stages and uses four tubes—a 12SQ7 as the first audio, a 12J5 as the inverter and two 50L6's in push-pull output. These circuits are conventional and it is only in the power supply where no transformer is required that this amplifier does not follow conventional design.

Elimination of the power transformer is accomplished by the use of two selenium rectifiers in a voltage doubler circuit which supplies 200 volts dc at 125 ma. to the two 50L6 output tubes. The voltage doubler circuit used in this amplifier is shown in the schematic diagram Fig. 19-27. The maximum voltage output that may be obtained at 150 ma. is approximately 255 volts when a 40 μfd condenser is used. Since only 205 volts are needed for the plates of the 50L6's a 22 ohm safety factor resistor and a 200 ohm dropping resistor are inserted in the circuit. The function of the 22 ohm resistor is to drop the voltage and to limit the peak condenser charging current thereby increasing the life of the selenium rectifiers.

The circuit may be modified to meet many individual requirements. A simple method whereby the 10 watts maximum output can be increased to 15 watts is to replace the 50L6 tubes with 6L6's and 150 ma. selenium rectifiers with the 200 ma. type. Likewise lower powered amplifiers can be constructed using the ac-dc power supply circuit shown in Fig. 19-28.

If higher powered outputs are desired a voltage tripler or even quadrupler circuit shown on Fig. 19-29 can be utilized. The voltage tripler circuit can be used to power a 20 watt amplifier. The same amplifier circuit is used except that a 6SQ7, a 6J5 and two 6L6's replace the 12SQ7, 12J5 and two 50L6's,

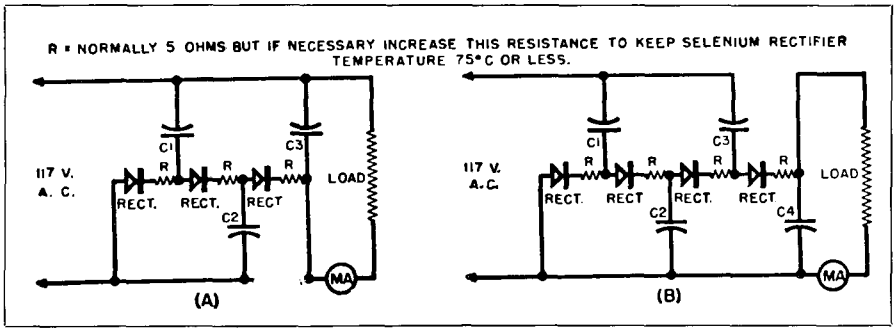

Fig. 19-29. (A) Voltage tripler circuit using three 200 ma. selenium rectifiers. With 40 mfd for C_1, C_2, and C_3, a dc output of 325 volts can be obtained with a load of 200 ma. (B) Voltage quadrupler circuit using four 200 ma. selenium rectifiers. With 40 mfd for C_1, C_2, C_3, and C_4, a dc output of 425 volts can be obtained at 200 ma.

and a filament transformer is added to the power supply. It should be noted that when these transformerless circuits are used as indicated in Fig. 19-27 an isolated ground (chassis not dc grounded) must be used.

An 8 Watt Amplifier with Cathode Follower

Pentode power amplifiers are seldom used without some means to compensate for their very high impedance which has a very small damping effect on the speaker. The lowest plate resistance of any of the well-known tubes is the 2A3 or 6A3, which is in the order of 800 ohms. If that resistance could be lowered or its effective impedance reduced by a substantial factor an improvement in reproduction would be achieved. This can be done by connecting the tube as a cathode follower.

The effective output impedance of a 6A3 connected as a cathode follower is about 150 ohms. Furthermore as a cathode follower has 100% degeneration all the benefits that this provides are received, such as sensitivity to plate voltage changes, small necessary filtering in the power supply, non-critical bias requirements and insensitivity to individual tube characteristics. The output transformer may be less costly and still yield superb results.

One disadvantage to the cathode follower is that it does not have any gain. As a matter of fact it has a loss of a few percent. Accordingly, a driving voltage equal to about 110% of the required output voltage must be provided.

For example, if 150 volts swing are required across the output transformer to yield the wanted power output then the cathode follower grid must be driven with 165 volts. The term "drive" is used figuratively as really there is no power required, merely voltage. This simplifies the problem considerably because a class A input transformer may be used, one preferably having a step-up ratio of 1 to 2 or even more.

As the driver can only swing so many volts (usually in the order of 65 to 90) it is necessary to step this up to the assumed 150 volts. This problem is further simplified because the cathode follower also degenerates its input capacity to practically zero. This permits the use of an input transformer of the less expensive type which usually has a higher inherent shunt capacity across the secondary. This capacity limits the high frequency response. If a high quality unit is used, even higher frequency improvement will be had.

The cathode follower as an output stage will result in improved low frequency response, improved high frequency response and will damp out all peaks in both the output transformer and speaker and result in less distortion at the same power output; however, it does require a higher driving voltage. The same power output may be obtained with given tubes as in the conventional method of hookup.

A Cathode Follower Circuit

In Fig. 19-30 an amplifier using triode connected 6L6's as cathode followers is shown. A pentode is disadvantageous as a cathode follower, as it interposes the problem of what to do with the screen. It cannot be tied to a positive potential as the cathode is swinging up and down with the signal, which would in effect change the screen voltage and the mode of operation of the tube. Type 6B4's or 2A3's would be even better but they require a separate filament supply for each tube, as the filaments are connected to each side of the output transformer.

The 6L6 tubes are biased at approximately 25 volts and the plate current is approximately 60 ma. per tube at 350 volts plate potential. This will result in slightly higher than the rated current, but is not high enough to heat the screens and does not damage the tubes. The 6L6 tubes are driven through a push-pull input transformer with a step-up ratio of 1 to 2 with only half the primary used. The output transformer should have approximately the same impedance ratio as if the tubes were connected in the normal manner.

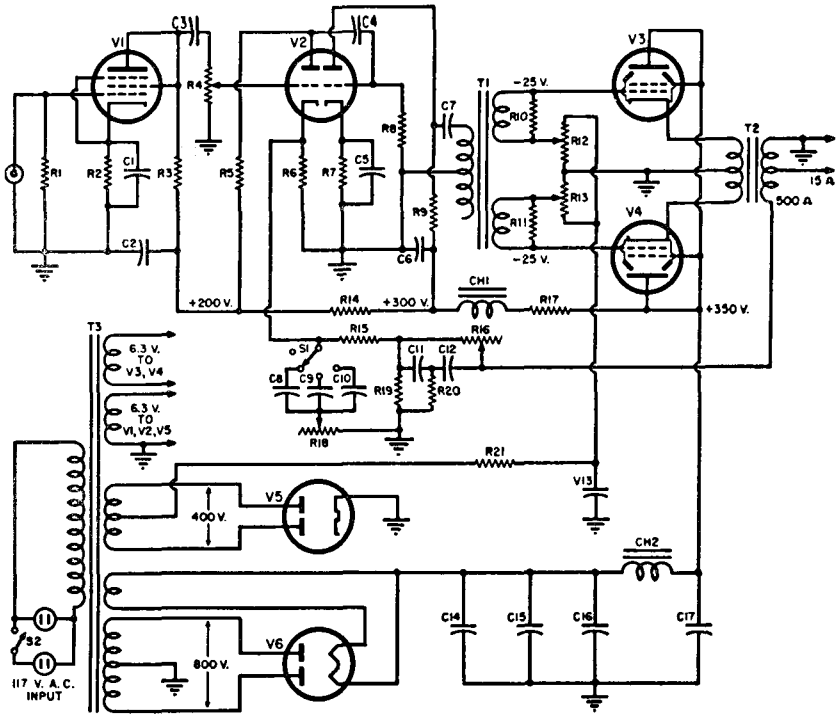

R_1—1 megohm, ½ w. res.
R_2, R_6—2200 ohm, 1 w. res.
R_3, R_4, R_{15}—47,000 ohm, ½ w. res.
R_4—.5 megohm pot.
R_5, R_9—39,000 ohm, ½ w. res.
R_7—1000 ohm, 1 w. res.
R_8—.5 megohm, ½ w. res.
R_{10}, R_{11}—250,000 ohm, ½ w. res.
R_{12}, R_{13}—10,000 ohm, wire-wound pot.
R_{16}—.5 megohm rheostat
R_{17}—2000 ohm, 10 w. res.
R_{18}—5000 ohm wire-wound rheostat
R_{19}, R_{20}—15,000 ohm, ½ w. res.
R_{21}—7500 ohm, 10 w. res.
C_1—25 μfd., 25 v. cond.
C_2—40 μfd., 250 v. elec. cond.
C_3, C_4—.5 μfd., 400 v. cond.
C_5—50 μfd., 25 v. cond.
C_6—20 μfd., 350 v. elec. cond.
C_7—1 μfd., 400 v. cond.
C_8—.25 μfd., 200 v. cond.
C_9, C_{11}, C_{13}—.1 μfd., 200 v. cond.
C_{10}—.05 μfd., 200 v. cond.
C_{12}—20 μfd., 250 v. elec. cond.
C_{14}, C_{15}, C_{16}—5 μfd., 600 elec. cond.
C_{17}—40 μfd., 450 v. elec. cond.
T_1—Driver trans. (See text)
T_2—Output trans. (See text)
T_3—Power trans., 400 v., c.t. @ 50 ma., 800 v., c.t. @ 150 ma., 6.3 v. @ 2 amps., 6.3 v. @ 2 amp., 5 v. @ 3 amps.
CH_1—10 hy., 50 ma. filter choke
CH_2—10 hy., 125 ma. filter choke
S_1—S.p. 3-pos. rotary sw.
S_2—S.p.s.t. toggle sw.
V_1—6SJ7
V_2—6N7
V_3, V_4—6L6
V_5—6X5
V_6—5U4G

Fig. 19-30.

Two additional 6L6's in parallel will double the power output with the same driving voltage. If four 6L6's are used (parallel triode connected) then approximately the same power may be obtained with a phase inverter and the input transformer may be eliminated.

Separate bias adjusting potentiometer are employed only if a high fidelity output transformer is used, so that the plate current of the two tubes may be balanced within the limits specified by the manufacturer. Usually a plate current difference of 5 ma. is permissible.

High and low frequency boosting controls are provided in a negative feedback circuit which also reduces the distortion in the pre-amplifier stages. The high frequency boost circuit allows a

choice of high frequency boost points which are determined by the capacitors C_8, C_9 and C_{10}.

The input 6SJ7 is triode-connected and provides sufficient gain for most crystal pickups. The proper compensation network for the pickup used should be inserted between the pickup and the input. If higher amplification is needed, the 6SJ7 may be pentode connected. Sufficient gain will result to allow the amplifier to be used with all the common type of microphones.

A 10-16 Watt Audio Amplifier

The first stage of this amplifier developed by John D. Goodell of the *Minnesota Electronics Corporation,* is a conventional triode voltage amplifier, with a cathode-biased resistor left unbypassed in order to obtain a convenient return point for the feedback voltage taken from the secondary of the output transformer. This feedback loop (which includes the entire amplifier from input to output) is intended principally to cor-

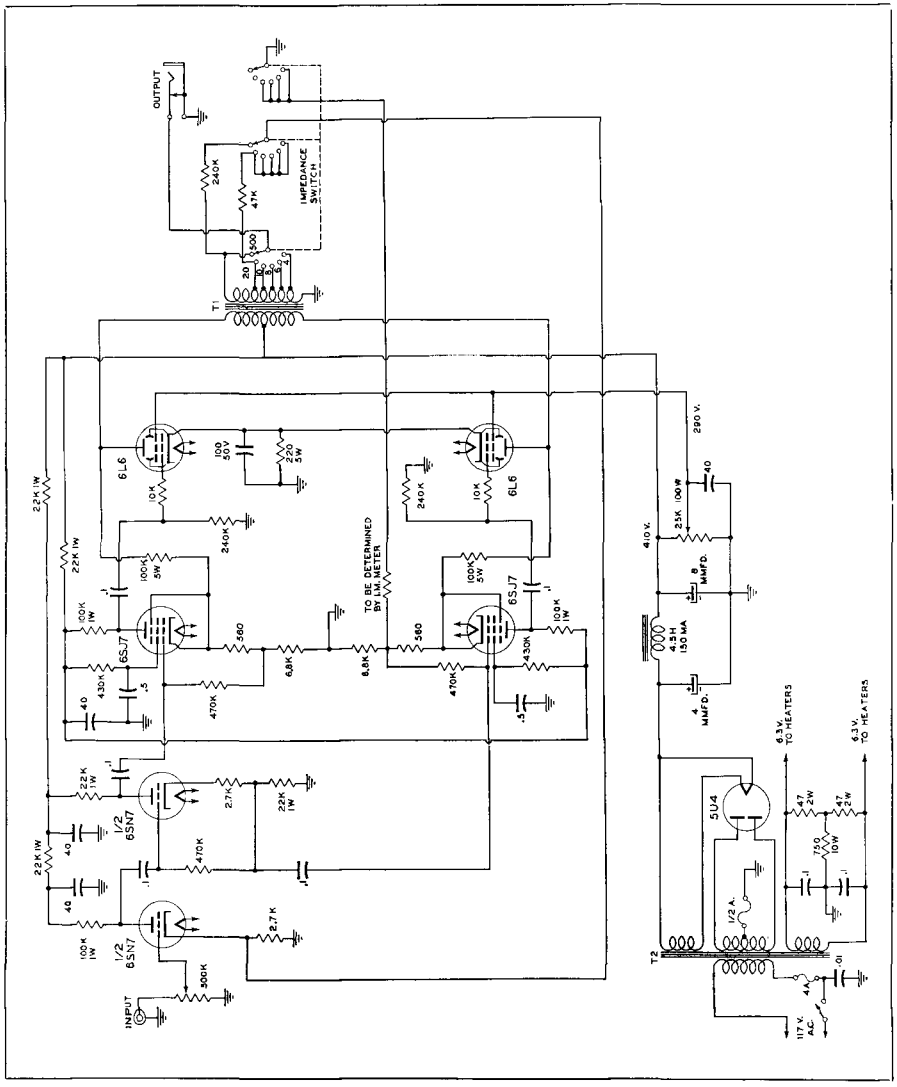

Fig. 19-31.

rect nonlinearity in the output transformer and to compensate for phase shifts and attenuations in the input circuits. Note that the input impedance changing switch in the output circuit automatically adjusts the feedback resistor for optimum results at varying output impedances (Fig. 19-31).

The maximum amount of feedback that can be applied to any amplifier is a function not only of the frequency response range but of the shape of the attenuation curve at both ends of the spectrum. The phase shift must be less than 180 degrees in the feedback loop with respect to the input signal at any frequency where the amplitude of the feedback component is greater than unity.

Reference to the diagram Fig. 19-31 shows that the second stage of the amplifier is a split-load type of phase inverter with half the load impedance in the cathode circuit and the other half in the plate circuit. The only disadvantages in this design are (a) that the maximum gain from the stage is always less than 2, (b) that raising the cathode so far above ground may introduce hum from the filaments, therefore this phase inverter cannot normally be used satisfactorily in low level stages, (c) there is a difference between the shunting capacitance across the plate load and across the cathode load. Theoretically this difference in shunt capacitance may introduce a certain amount of unbalance between the two halves of the circuit at frequencies above approximately 6000 cps. With low values of load resistors the effect is not sufficiently observable to warrant consideration.

Where this type of phase inverter is required to furnish a very large signal it is necessary to increase the plate voltage to the limits the tube will stand if absolute minimum values of nonlinear distortion are to be obtained in the plate circuit. In the *Goodell* amplifier, the signal required is relatively low under all conditions of operation.

The third stage of the amplifier consists of two 6SJ7's (pentode connected) as push-pull drivers. A small portion of the total load resistance for these tubes is inserted in the cathode circuit. This results in an increase of input impedance in the same manner as with a split load phase inverter, although the magnitude of the effect is not great.

The output stage is first considered in terms of operation with 6L6 beam power tetrodes. The general circuit is conventional but a feedback resistor is direct-coupled from the plate of each output tube to the cathode of the associated driver tube. This results in a voltage divider arrangement that applies a certain amount of fixed bias to the cathode circuit of the driver. The value of cathode bias resistance is chosen so that the combination of self bias from the voltage dividing network produces the correct operating point for the driver stage. This arrangement eliminates the need for a blocking condenser in the feedback loop, so that no series reactance effects are encountered. The feedback does not fall off, even at very low frequencies contributing considerably to the stability of the circuit in this region.

Parts List for Fig. 19-32.

R_1, R_2, R_{15}, R_{17}—500,000 ohm pot.
R3, R_{27}—2000 ohm, ¼ w. res.
R_4, R_{11}—6000 ohm, ¼ w. res.
R_5, R_6, R_{10}, R_{19}, R_{21}, R_{27}—100,000 ohm, ¼ w. res.
R_7, R_8—22,000 ohm, ¼ w. res.
R9, R_{12}—270,000 ohm, ¼ w. res.
R_{13}—1 megohm, ¼ w. res.
R_{14}—33,000 ohm, ¼ w. res.
R_{16}—60,000 ohm, ¼ w. res.
R_{18}, R_{20}, R_{22}—500,000 ohm, ¼ w. res.
R_{24}—1750 ohm, 1 w. res.
R_{25}—2000 ohm, ¼ w. res.
R_{26}—1 megohm pot.
R_{28}—25,000 ohm, 25 w. res.
R_{29}—12,000 ohm, ¼ w. res.
C_1, C_2—.1μfd., 200 v. cond.
C_3, C_4, C_8, C_{12}, C_{15}—25 μfd., 25 v. cond.
C_5—.01 μfd., 400 v. cond.
C_6, C_7, C_{14}, C_{19}, C_{20}—.1 μfd., 400 v. cond.
C_9—.5 μfd., 400 v. cond.
C_{10}—100 μμfd., mica cond.
C_{11}—.05 μfd., 200 v. cond.
C_{13}, C_{16}—8 μfd., 400 v. elec. cond.
C_{17}—24 μfd., 400 v. elec. cond.
T_1—Driver trans., Class "B", 5.25 to 1 ratio
T_2—Output trans., 8000 ohm to v.c.
T_3—Power trans., 700 v., c.t. @ 70 ma., 5 v. @ 3 amp 6.3 v. @ 2.5 amp.
L_1—Filter choke, 20 henry, 80 ma.
1—6SK7 tube
1—6H6 tube
5—6C5 tubes
1—80 tube
1—6N7 tube

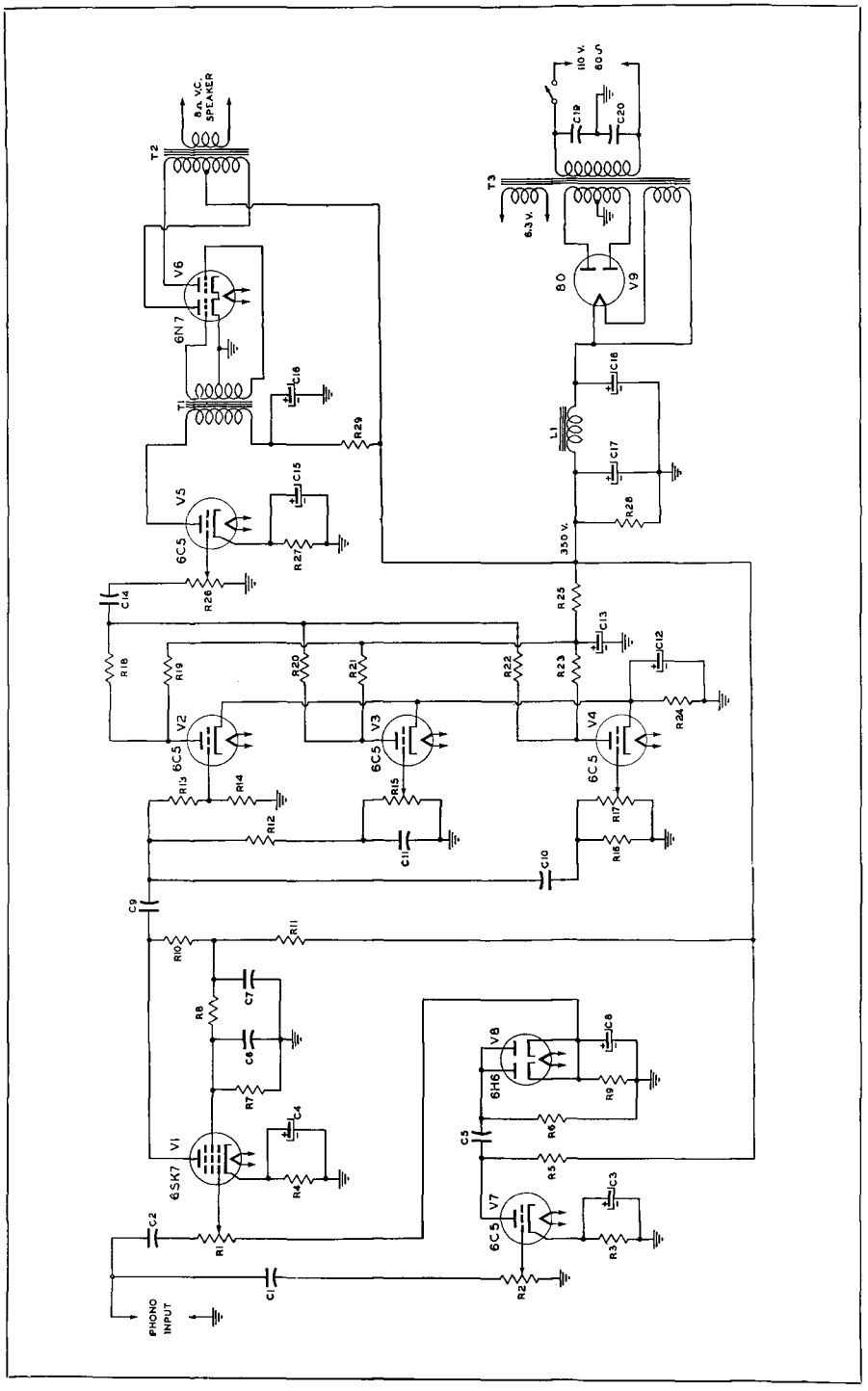

Fig. 19-32. Wiring diagram of the eight-tube Audio Amplifier and its associated power supply.

The gain of the beam power tetrodes is such that a large feedback factor is obtained with the values chosen, and the gain of the driver stage is greatly reduced. When triodes (such as 6B4's) are used in the output sockets the much lower gain of the triodes greatly reduces the feedback factor and automatically increases the gain of the driver stage to provide sufficient voltage to the grids of the triodes. The filament center tap is returned to ground through a suitable resistor to provide the proper operating bias conditions for the triodes. When beam power tetrodes are used the current flow is through the cathode instead of the filaments and the center tap return of the filaments has no effect on the operation of the circuit. Note that either triodes or tetrodes may be employed in this circuit.

An 8 Tube Amplifier with Volume Expander and Full Tone Control

This amplifier uses a total of eight tubes; two in the expander circuit, two in the tone control circuits, and four in straight-through amplification. The main features of the design are the volume expansion circuit, which will give any required degree of expansion, and the tone control circuits which provide boosts at the desired frequencies but have little if any attenuation at other frequencies.

The expansion circuit shown in Fig. 19-32 employs a 6SK7 variable gain tube to obtain the variation in volume level desired. It is used in the input circuit because of its limited signal capabilities. The tube is connected as a pentode with its screen grid kept at a constant voltage by the use of a bleeder circuit. With no expansion (with the potentiometer R_2 turned all the way down) the bias on the 6SK7 is determined by the amount of rectified positive voltage developed on the cathode of V_8 (6H6) which in turn is dependent on the relative volume level of the input signal amplified by the 6C5 and rectified by V_8. This allows any degree of expansion desired, no matter how the input gain control is set. The long RC time constant of C_8 and R_9 assures a slow decay of expansion and follows the general trend of the volume. This circuit can be changed for volume compression operation with only a slight change in the wiring as shown in Fig. 19-33.

Tone Control

The 10 db bass and treble boost are practically independent in operation. V_2 is a conventional straight-through amplifier which maintains a flat response between 50 and 8000 cycles, in the output with no high or low frequency boost. See Curve A, Fig. 19-34.

The bass boost amplifier, V_3 takes its input signal from a low pass RC filter network R_{12}, R_{15} and C_{11}, which bypasses the high frequencies to ground through C_{11} and develops the low frequencies across R_{15}. Resistor R_{12} serves to isolate the input circuit of V_2 and V_4 from the shunting effect of C_{11}. By referring to Fig. 19-34 and comparing Curves A and C it will be observed that

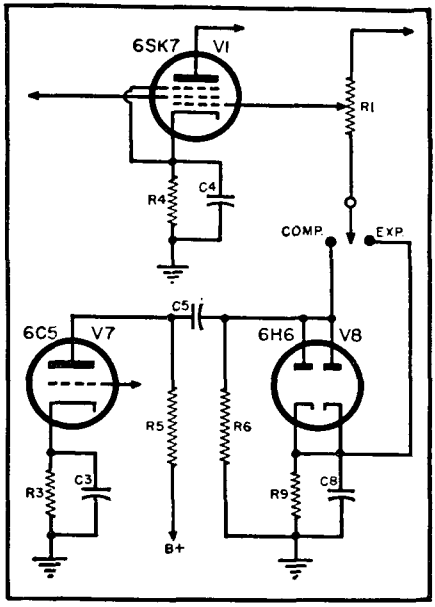

Fig. 19-33. Necessary change in expander circuit in order to obtain Volume Compression.

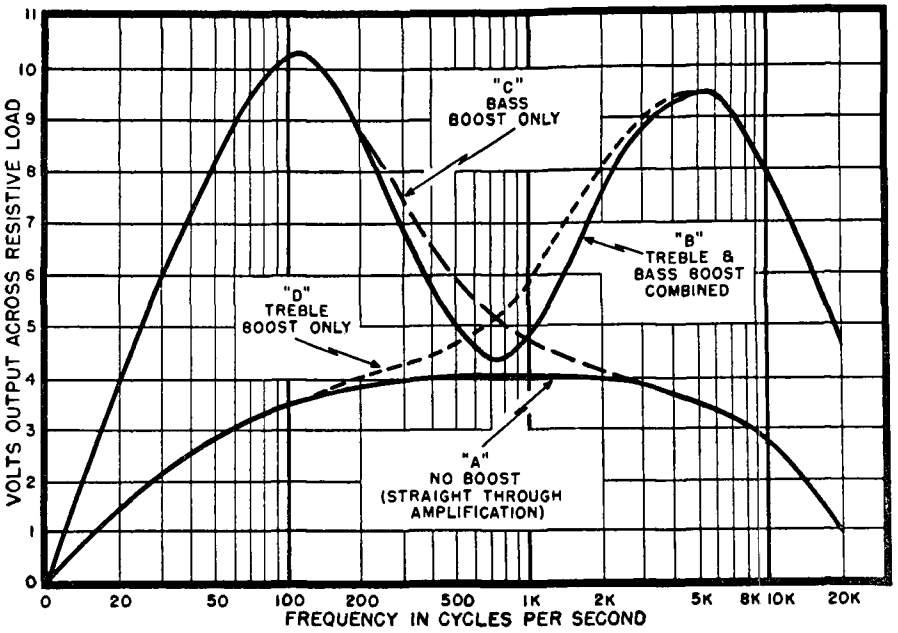

Fig. 19-34. Frequency response curves show available low and high frequency boosts.

there is a gain of slightly over 3-1 at 100 cycles which is about a 10 db boost.

The treble boost amplifier V_4 takes its input signal from the high pass filters R_{17}, R_{16}, C_{10} which develops the highs across the resistor R_7 and the lows across the high impedance of C_{10}. R_{16} serves to lower the resistance of the potentiometer R_{17} to 50,000 ohms. The equivalent circuit could be replaced by a 50,000 ohm potentiometer. Referring again to Fig. 19-34 and comparing curves A and D it will be noted that a gain of slightly less than 3-1 at 6,000 cycles is obtained which is about a 10 db boost. The output signals of V_2, V_3 and V_4 are combined with low distortion by the use of separate plate load resistors R_{19}, R_{21} and R_{23} and the isolating resistors R_{18}, R_{20} and R_{22}. These are coupled through C_{14} to the grid of V_5.

The driver stage is a conventional Class A amplifier with transformer coupling to the Class B power amplifier stage, using a 6N7 as a power tube. The three decoupling filters R_{11}-C_7, R_{25}-C_{13}, and R_{29}-C_{16} assure the least amount of feedback or coupling between stages.

The frequency response curves Fig. 19-34 are plotted with a 10 ohm 25 watt resistance load in place of the voice coil of the speaker. With the speaker connected in place of the resistor the high frequency response of the amplifier does not fall off appreciably.

RECORDING AMPLIFIERS

A Conventional Beam-Power Amplifier

First we will discuss a more or less conventional amplifier for disc recording which has achieved considerable popularity. Beam power tubes (6L6's) are considered desirable for general purpose amplifiers but their high effective generator impedance results in the relatively critical requirements with regard to load impedance. The development of degenerative feedback networks indicates a solution to this problem. If a careful choice is made in the output transformer, then it is possible to design amplifiers using push-pull

6L6's in carefully designed circuits which possess negligible intermodulation distortion. The simple amplifier illustrated in Fig. 19-35 employs such a design. The power output section of the circuit includes two 6L6's in push-pull.

Most manufacturers operate these tubes in Class AB1 rather than in Class A. The reason for this is that the power supply may be made smaller inasmuch as less static plate current flows. The tubes may be driven harder and more output power obtained at reasonably low harmonic distortion. There is a disadvantage, however; the tubes must be carefully balanced for optimum results. Intermodulation distortion results from non-linearity and it is to be expected that any departure from Class A operation will be undesirable from this standpoint. In Class A, variations in replacement tubes are not as serious as in Class AB1 operation.

It is very important that the output transformers have adequate inductance. If sufficient, this appears as a shunt reactive load. A reactive load line is elliptical and will combine with the resistive load line to produce an elliptical departure from the linearity. This reduces the undistorted power output. If required, however, a reduced primary inductance may be employed to aid in lowering the bass resonant peak, characteristic of beam power tubes fed into a loudspeaker load. Under these conditions there will also be a high frequency rise. This will tend to increase the harmonic distortion percentage. As the impedance rises with frequency, it produces a greater output at harmonic frequencies than at the fundamental frequency. Feedback circuits, therefore, will aid somewhat by providing superior fidelity at the higher frequencies.

There are many types of phase inverters, (explained in previous paragraphs), that provide satisfactory results. The one employed in this circuit is perhaps one of the most popular. The principal disadvantage in such a circuit is that the tube stage offers very little gain. This must be compensated for by additional gain in other stages. The difference between the plate circuit-to-ground and the cathode-to-ground shunt capacitance is not the same. This will introduce some unbalance at frequencies above 6000 cycles. However, phase shift problems are greatly minimized and the stability of this circuit is excellent.

A disadvantage of this circuit is that the high cathode-to-filament voltage may introduce some problems that preclude the use of this phase inverter in stages preceding the driver. It is recommended that a resistor of approximately 50,000 ohms for the plate and cathode loading resistors be used. The lower values keep the cathode-to-filament volt-

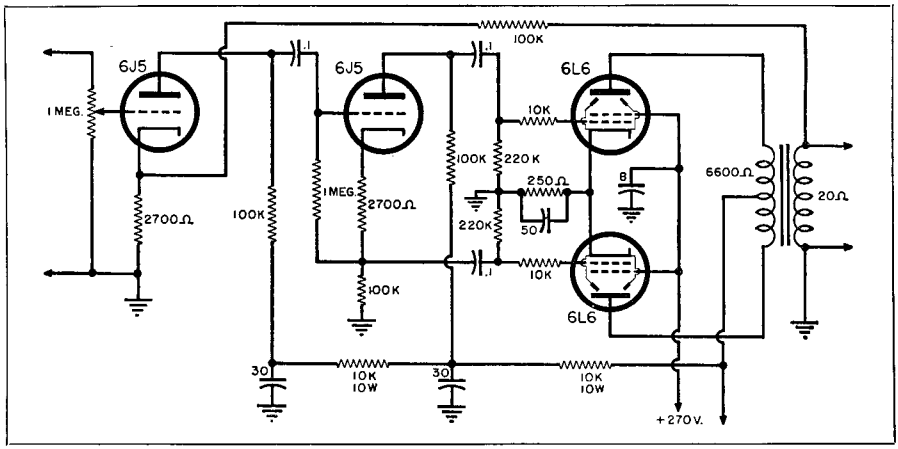

Fig. 19-35. The 6L6 push-pull amplifier of proven value and good design.

age low. The resistors shown in series with the two grids of the 6L6's are not found, as a rule, in commercial amplifiers. They do, however, aid in decreasing tendencies toward oscillation and provide a slight cushioning effect when the 6L6's are driven close the grid current region.

There is no bypass condenser used across the cathode resistor of the 6J5 phase inverter. The usual bypass should be omitted in order that no hum be introduced in the stage.

It is desirable to use a feedback voltage from one of the plates of the 6L6 or from one of the taps on the winding of the output transformer, if a single-ended amplifier is to be used. It should be pointed out that in such applications feedback in this section of the amplifier should never be used for frequency compensation or for the elimination of hum or distortion which usually results from careless design.

Any amplifier, especially one for recording, should always be constructed without any feedback and adjusted for lowest possible hum and proper performance before any additional circuits are added to introduce any form of feedback. The principal advantage in such a stage is to help to adjust the impedance actually presented by the loudspeaker or cutter. Feedback in such circuits will tend to clear up whatever distortion and inherent noise remains. This however, should be accepted as a secondary advantage and not as a principal design factor.

It is far better to run the feedback from one of the taps on the secondary of the output transformer. Excessive feedback is a bad condition and can only be corrected by cut-and-try by moving the feedback connection to a point of lower output voltage. For the initial adjustment, for choice of feedback components, the amplifier should be run in its normal condition for some time and carefully studied. Then an input voltage from a signal generator should be applied to produce a sufficient signal output for convenient measurement. The secondary remains opened during this test. The voltage is measured directly across the open leads of the secondary of the output transformer. Later a resistance corresponding to half of the correct speaker load is applied across the output terminals without changing the input signal. The resulting reduced output is measured on the meter. Usually the voltage will be approximately one-fourth or even less when the resistive load is added. The next step is to take a resistor of approximately 50,000 ohms and insert this in the circuit. By cut-and-try the point will be found where not only is the volume reduced but distortion and other inherent noise will be found to clear up considerably. The ear is the best judge of the correct tap or value of series resistance to be used. When properly adjusted, the actual effective impedance as seen by the speaker will be half of the speaker's nominal impedance. Inasmuch as the turns ratio is a fixed value, the load reflected into the primary of the transformer remains at the desired value.

Note that the use of feedback as a frequency equalizing media is entirely satisfactory in voltage gain stages. However, in the power output stage, the primary purpose of feedback is to stabilize the circuit with regard to variations in speaker or cutter impedance with frequency. We may also take the feedback from the 500 ohm tap of the secondary of the transformer. As mentioned previously, the only rule of thumb for satisfactory operations is to select a tap or voltage point where results are most pleasing to the ear. If too much voltage is taken from an output circuit, oscillations will occur and serious distortion will result. The only solution is to find a point where a lower voltage is present.

High Quality Recording Amplifier Using Triodes

Opinions vary among engineers as to the desirability of employing beam power amplifiers instead of triode amplifiers such as the 2A3, 6A3, 6B4, etc., for high quality recording in the output

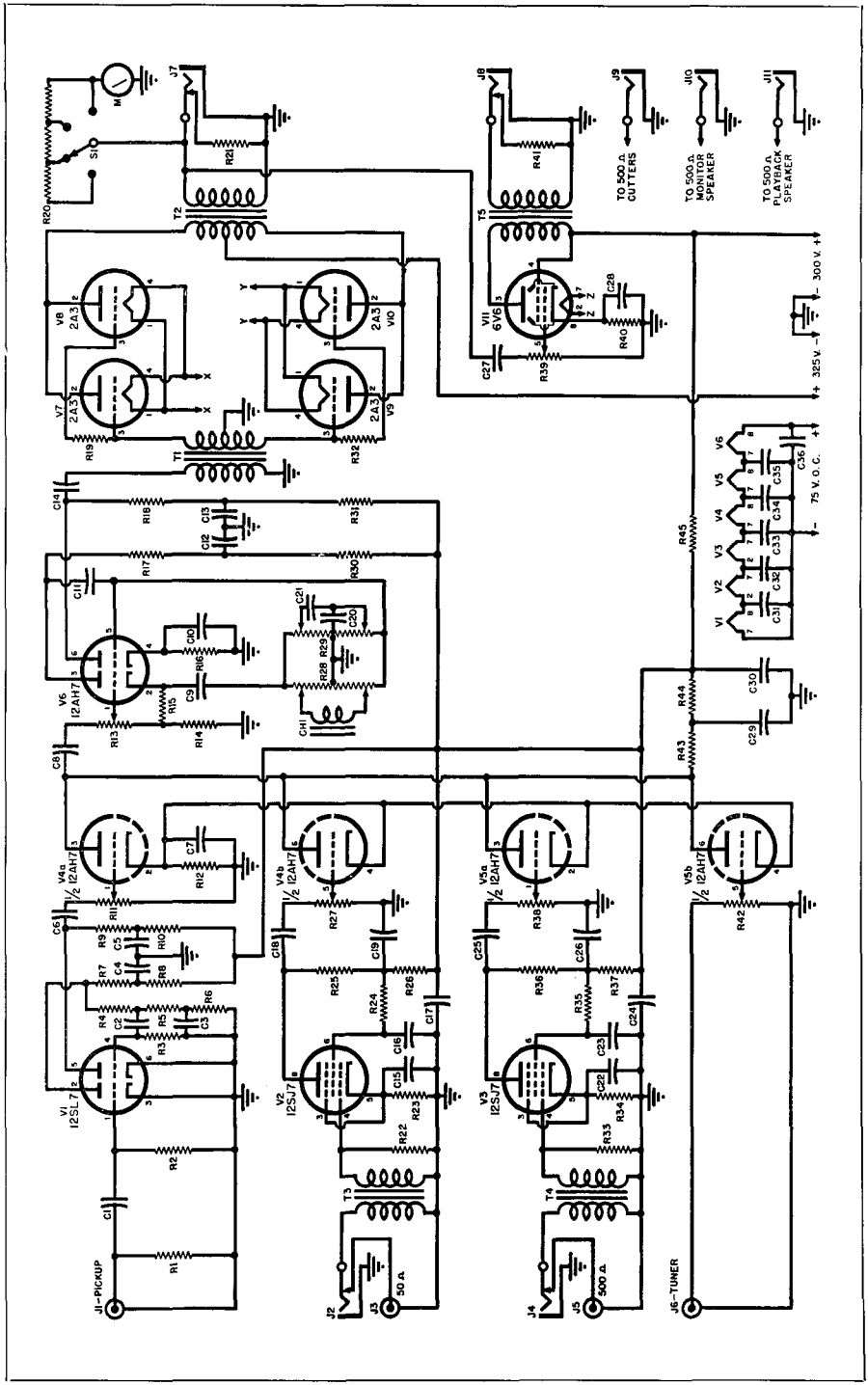

Fig. 19-36. Diagram of amplifier. Power supply is built on separate chassis to offset hum pickup.

stage of a power amplifier. It is the author's personal opinion, based on actual experience, that a properly designed output stage employing type 2A3 triodes is a bit superior to 6L6's even when the latter employs feedback in its output channel. When more than one triode is used, the system becomes even more flexible. Push-pull 2A3's, for example, in self-bias operation are capable of approximately 10 watts output at low distortion. The power may be doubled by employing push-pull parallel 2A3's. There is more than one advantage to the latter arrangement as the plate impedance presented at the primary of the output transformer is reduced to a very low value. When connected to a 500 ohm cutter at the output of the transformer, a near perfect match may be realized due to the extremely low plate impedance of the primary.

Reproducing systems, too, are critical as to their loading. If a 500 ohm speaker is used at the output for reproduction, then the 500 ohm load reflected to the low impedance primary becomes more or less non-critical. Impedance changes with frequency. The closer the match between the primary and secondary, the more non-critical becomes the loading effect. Therefore, high fidelity may be achieved at very low distortion in the output channel.

This is extremely important when driving a 500 ohm magnetic cutter.

The amplifier to be discussed is the result of many months of research and affords the maximum in flexibility for sound-on disc or magnetic recording and playback.

A reserve of audio power is always needed in order to handle excessive audio peaks found in symphonic music. Lacking a reserve, no amplifier can reproduce these peaks without serious distortion being introduced.

Hum-free operation is a prime requisite in a recording system, hence the use of dc for the filaments of the preamp, mixer, and tone control tubes. The filaments are wired in series as shown and each is bypassed with a 20 ufd. electrolytic. It is advisable to connect the tubes in the sequence shown for lowest possible hum.

Four separate inputs are provided. One of these is a combined pre-amp and equalizer for variable reluctance pickups, now widely used for high quality reproduction. Two low impedance inputs, one of 50 ohms and the other of 500 ohms, are provided. The former furnishes sufficient gain for 50 ohm microphones or dynamic pickups, while the third input provides for 500 ohm line or other sources.

The fourth input is of lower gain and terminates in a *Browning* FM-AM tuner for off-the-air recording. Con-

Parts List for Fig. 19-36.

R_1—6800 ohm, ½ w. res.
R_2, R_5—3.3 megohm, ½ w. res.
R_4—220,000 ohm, ½ w. res.
R_6, R_{26}, R_{37}—27,000 ohm, ½ w. res.
R_8—180,000 ohm, ½ w. res.
R_7, R_8—68,000 ohm, ½ w. res.
R_9, R_{10}—33,000 ohm, ½ w. res.
R_{11}, R_{12}, R_{27}, R_{38}, R_{39}, R_{42}—.5 megohm pot.
R_{13}—470 ohm, 1 w. res.
R_{14}—22,000 ohm, ½ w. res.
R_{15}, R_{16}—820 ohm, ½ w. res.
R_{17}, R_{18}—47,000 ohm, ½ w. res.
R_{19}, R_{32}—100 ohm, ½ w. res.
R_{20}—Multiplier res. (See text)
R_{21}—500 ohm, 20 w. wirewound res.
R_{22}, R_{24}, R_{33}, R_{35}—1 megohm, ½ w. res.
R_{23}, R_{44}—1000 ohm, ½ w. res.
R_{25}, R_{36}—470,000 ohm, ½ w. res.
R_{29}, R_{29}—Tone control (Thordarson R-1068)
R_{30}, R_{31}—10,000 ohm, ½ w. res.
R_{40}—500 ohm, 1 w. res.
R_{41}—500 ohm, 5 w. wirewound res.
R_{43}—10,000 ohm, 2 w. res.
R_{44}—5000 ohm, 1 w. res.
R_{45}—4700 ohm, 2 w. res.
C_1, C_2, C_{11}, C_{14}—.05 μfd., 400 v. cond.
C_3, C_{20}—.01 μfd., 400 v. cond.
C_4, C_5—15 μfd., 450 v. elec. cond.
C_6, C_8, C_{18}, C_{25}—.05 μfd., 400 v. cond. (in metal can)
C_7, C_{10}—10 μfd., 25 v. elec. cond.
C_9, C_{28}—10 μfd., 50 v. elec. cond.
C_{12}, C_{13}, C_{17}, C_{19}, C_{24}, C_{26}, C_{29}, C_{30}—20 μfd., 450 v. elec. cond.
C_{15}, C_{27}—5 μfd., 25 v. elec. cond.
C_{16}, C_{23}—.1 μfd., 400 v. cond.
C_{21}—.04 μfd., 400 v. cond.
C_{27}—.01 μfd., 600 v. cond.
C_{31}, C_{32}, C_{33}, C_{34}, C_{35}—20 μfd., 150 v. elec. cond.
C_{36}—40 μfd., 150 v. elec. cond.
T_1—Single plate to push-pull grids (UTC A-18 or equivalent)
T_2—Push-pull parallel 2A3's to 500 ohms self bias
T_3—50 ohm to grid (UTC A-10 or equivalent)
T_4—500 ohm to grid (UTC A-10 or equivalent)
T_5—6V6 plate to 500 ohm line
CH_1—Audio choke (Thordarson T-20C74 or T-1C69)
J_2, J_4, J_7, J_8—Single closed circuit jack
J_1, J_6, J_9—Shielded input terminal jack
J_3, J_{10}, J_{11}—Open circuit jack
S_1—S.p. 4-pos. rotary sw.
M— — 10 + 6 db. meter (See text)
1—12SL7GT tube
1—6V6 tube
2—12SJ7 tubes
3—12AH7GT tubes
4—2A3 tubes

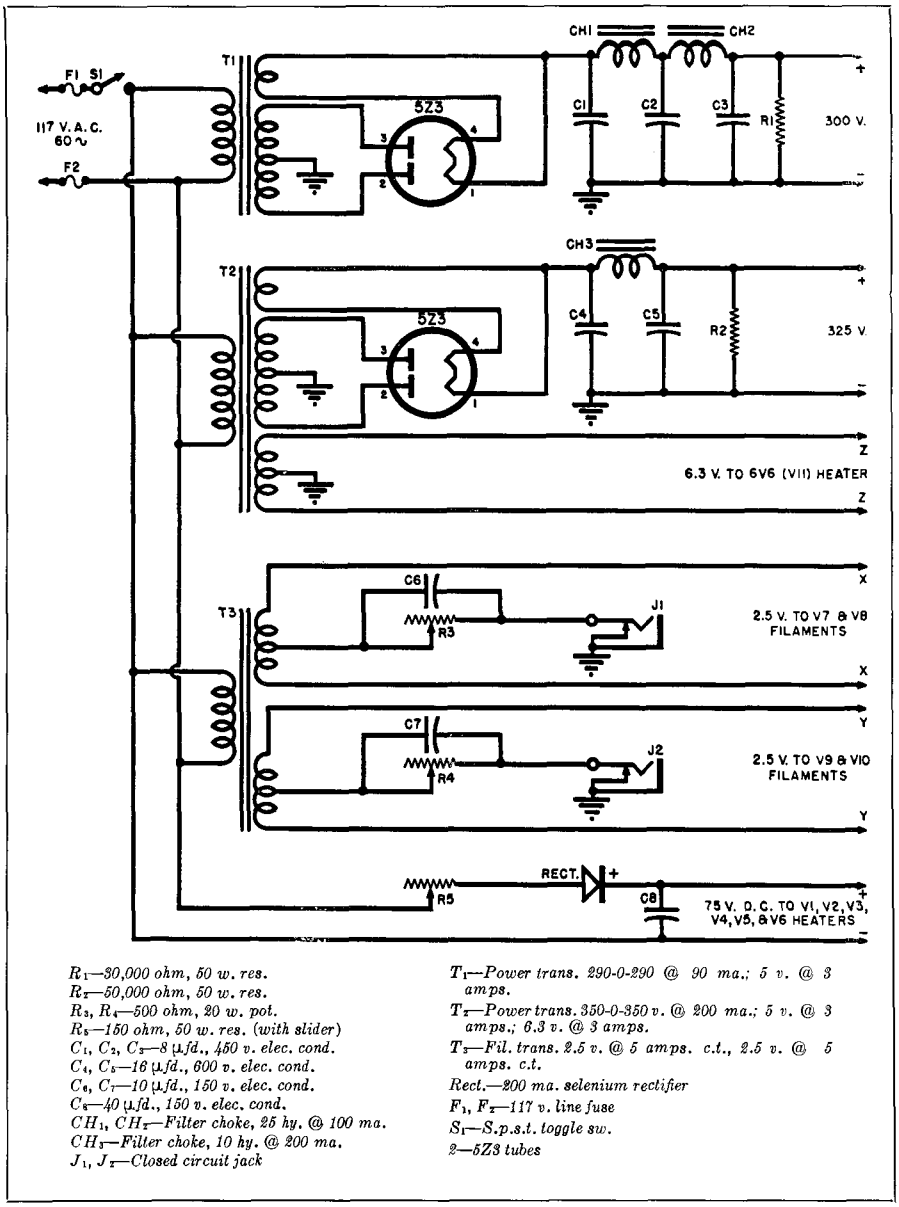

R_1—30,000 ohm, 50 w. res.
R_2—50,000 ohm, 50 w. res.
R_3, R_4—500 ohm, 20 w. pot.
R_5—150 ohm, 50 w. res. (with slider)
C_1, C_2, C_3—8 μfd., 450 v. elec. cond.
C_4, C_5—16 μfd., 600 v. elec. cond.
C_6, C_7—10 μfd., 150 v. elec. cond.
C_8—40 μfd., 150 v. elec. cond.
CH_1, CH_2—Filter choke, 25 hy. @ 100 ma.
CH_3—Filter choke, 10 hy. @ 200 ma.
J_1, J_2—Closed circuit jack
T_1—Power trans. 290-0-290 @ 90 ma.; 5 v. @ 3 amps.
T_2—Power trans. 350-0-350 v. @ 200 ma.; 5 v. @ 3 amps.; 6.3 v. @ 3 amps.
T_3—Fil. trans. 2.5 v. @ 5 amps. c.t., 2.5 v. @ 5 amps. c.t.
Rect.—200 ma. selenium rectifier
F_1, F_2—117 v. line fuse
S_1—S.p.s.t. toggle sw.
2—5Z3 tubes

Fig. 19-37. Schematic diagram of the power supplies. Outputs are fed to amplifier through heavy cable. Plate current may be measured at jacks, J_1 and J_2.

ventional crystal pickups may also be used in this channel but proper *RC* networks must be added to obtain constant velocity characteristics as described in other chapters.

Mixing is accomplished with the four halves of two dual-triode 12AH7's. There is no cross-talk between channels inasmuch as individual grid circuits are employed. All of the plates may be tied together and fed from a common plate load and isolating resistor network, as shown in Fig. 19-36. Power supply is shown in Fig. 19-37.

Operation of the tone control equalizer is based on degeneration in the cathode circuit of the first section of the 12AH7. If resistance is introduced in the cathode circuit, any signal developed by the tube will also appear across the resistance. This signal voltage is opposite in phase and in series with the voltage impressed on the grid and cathode of the tube. Degeneration takes place and the amplification of the tube is reduced. In this application the plate loading resistor, R_{17}, is made small and the cathode resistor R_{14} large so that a greater part of the voltage developed by the tube appears in the cathode circuit.

Since the circuit is resistive, there is little or no frequency discrimination at audio frequencies and all frequencies are degenerated in an equal amount. If the cathode resistance is shunted with an inductance of proper value, the resistance at low frequencies is practically shorted out due to the low impedance of the choke at low frequencies. Therefore, degeneration of the low frequencies is eliminated and the greater part of the signal developed by the tube appears across the resistor R_{17}. The result is an increase in the low frequency response of the circuit. See Fig. 19-38.

On the other hand, if a condenser of proper value is shunted across the cathode resistor, the low impedance of the condenser at high frequencies reduces the impedance of the circuit. Degeneration of the higher frequencies is accordingly reduced and the high frequency response of the circuit is increased. Attenuation of the low frequencies can be accomplished by shunting the grid circuit of the following stage with a choke or inductance. The value of the choke, CH_1, used in the bass boost circuit, also has the correct value for an attenuation circuit. The high frequencies can be attenuated by shunting the same grid circuit with a suitable condenser.

The function of control R_{28} is to introduce the choke CH_1 into either the cathode circuit for bass boost or into the grid circuit for bass attenuation. Control R_{20} applies condenser C_{21} to the cathode circuit for treble increase or C_{20} to the grid circuit for treble decrease. The controls are coupled to the cathode through condenser C_9 and added to the following grid by a shielded lead. Shielding of the choke is extremely important. It must be oriented physically on the chassis for lowest possible hum pickup. Shielding must run all the way to the bottom of the choke.

The low frequency control will boost 12 db at 60 cycles (in the maximum boost position) or attenuate 28 db in the cut-off position. The high frequency control will boost 12 db at 10,000 cycles in the maximum boost position or attenuate 35 db in the maxi-

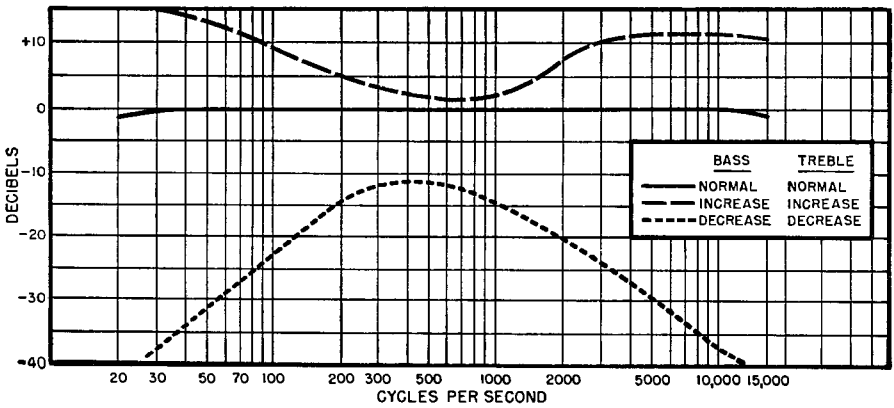

Fig. 19-38. Audio response curves for various combinations of bass-treble control settings.

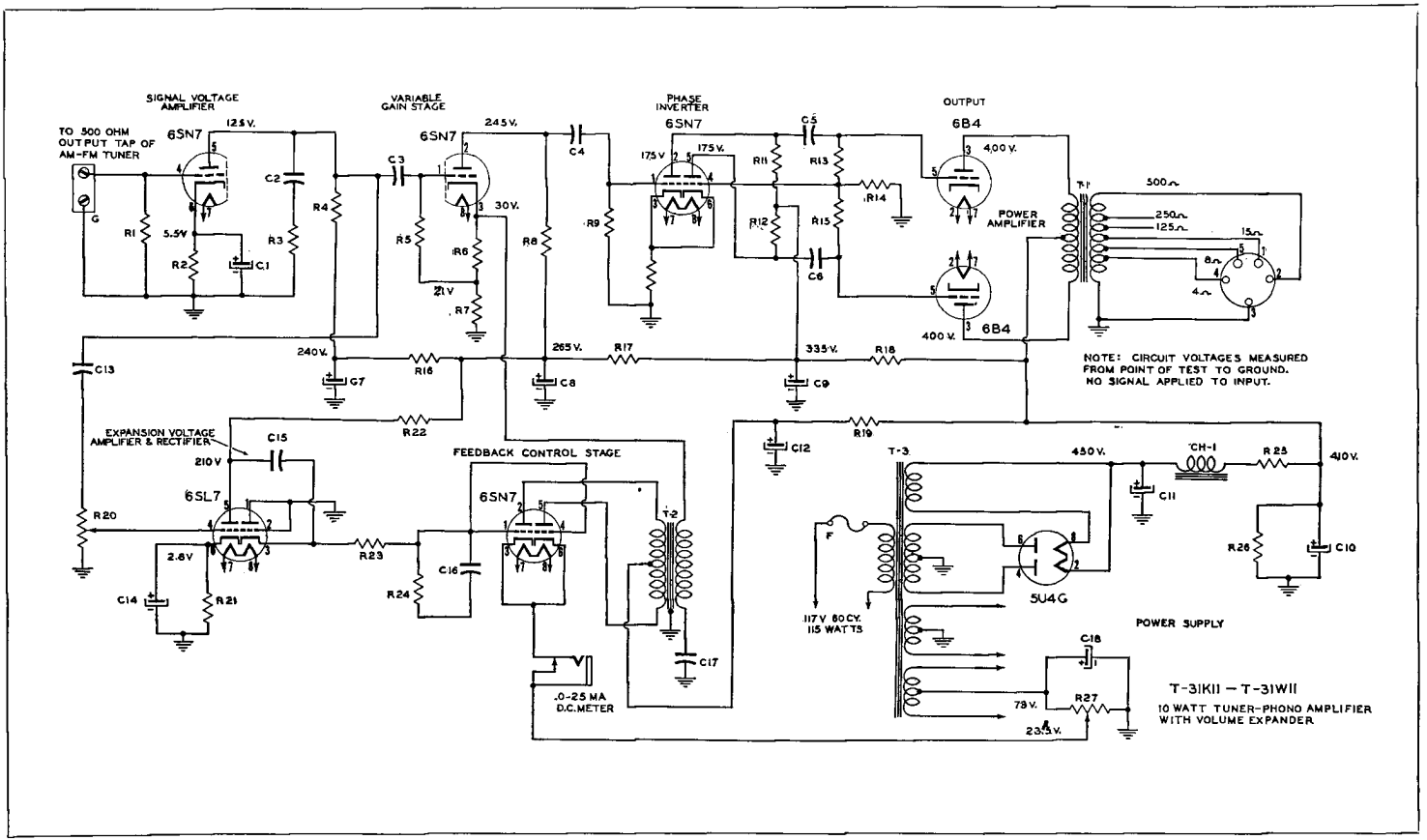
SIGNAL VOLTAGE AMPLIFIER
VARIABLE GAIN STAGE
PHASE INVERTER
OUTPUT
TO 500 OHM OUTPUT TAP OF AM-FM TUNER
6SN7
12.5 V.
24.5 V.
175 V.
4,00 V.
6B4
POWER AMPLIFIER
500Ω
250Ω
125Ω
15Ω
8Ω
4Ω
5.5V
30V.
21V
240V.
265 V.
335 V.
400 V.
NOTE: CIRCUIT VOLTAGES MEASURED FROM POINT OF TEST TO GROUND. NO SIGNAL APPLIED TO INPUT.
EXPANSION VOLTAGE AMPLIFIER & RECTIFIER
210 V
6SL7
2.8V
FEEDBACK CONTROL STAGE
T-2
.0-25 MA D.C.METER
T-3
450 V.
CH-1
410 V.
5U4G
117 V 60 CY. 115 WATTS
POWER SUPPLY
73 V.
23.5 V.
T-31K11 – T-31W11
10 WATT TUNER-PHONO AMPLIFIER WITH VOLUME EXPANDER

Fig. 19-39.

Parts List for Fig. 19-39.

Transformers and Chokes

T-1	*T-49812C*	*Output transformer*
T-2	*T-20A26*	*Feedback control transformer*
T-3	*T-49810C*	*Power transformer*
CH-1	*T-49809C*	*Filter choke*

Tubes

3	*6SN7GT*	*Tubes*
1	*6SL7GT*	*Tube*
2	*6B4-G*	*Tubes*
1	*5U4-G*	*Tube*

Resistors

All resistors are ½W 10% tol. carbon unless otherwise specified.

R-1	*470 ohm resistor*
R-2	*4700 ohm resistor*
R-3	*22K ohm resistor*
R-4	*100 K ohm resistor*
R-5	*470K ohm resistor*
R-6	*4700 ohm resistor*
R-7	*10K ohm resistor*
R-8	*10K ohm resistor*
R-9	*220K ohm resistor*
R-10	*2200 ohm resistor*
R-11	*100K ohm resistor*
R-12	*100K ohm resistor*
R-13	*220K ohm resistor*
R-14	*220K ohm resistor*
R-15	*220K ohm resistor*
R-16	*22K ohm resistor*
R-17	*22K ohm resistor—1 watt*
R-18	*10K ohm resistor—1 watt*
R-19	*1000 ohm resistor—1 watt*
R-20	*1 megohm control*
R-21	*4700 ohm resistor*
R-22	*100K ohm resistor*
R-23	*470K ohm resistor*
R-24	*470K ohm resistor*
R-25	*300 ohm 25 watt wirewound resistor*
R-26	*20K ohm 25 watt wirewound resistor*
R-27	*800 ohm 10 watt semivariable wirewound resistor.*

Condensers

C-1	*10 Mfd. 25V. electrolytic condenser*
C-2	*.02 Mfd. 400 V. paper condenser*
C-3	*.1 Mfd. 400V. paper condenser*
C-4	*.1 Mfd. 400 V. paper condenser*
C-5	*.1 Mfd. 400V. paper condenser*
C-6	*.1 Mfd. 400V. paper condenser*
C-7, *C-8*	*8-8 Mfd. 450V. electrolytic condenser*
C-9, *C-10*	*8-8 Mfd. 475V. electrolytic condenser*
C-11	*8 Mfd. 600V. electrolytic condenser*
C-12	*10 Mfd. 450V. electrolytic condenser*
C-13	*.1 Mfd. 400V. paper condenser*
C-14	*10 Mfd. 25V. electrolytic condenser*
C-15	*.1 Mfd. 400V. paper condenser*
C-16	*.5 Mfd. 100 V. paper condenser*
C-17	*.5 Mfd. 200V. paper condenser (Paralleled)*
	.5 Mfd. 200V. paper condenser
C-18	*40 Mfd. 150V. electrolytic condenser*

Miscellaneous Parts

1	*Amplifier chassis and bottom cover with the following chassis parts pre-assembled in their proper positions*
1	*Line cord*
1	*Fuse holder*
1	*3 amp. fuse*
1	*Control knob*
3	*Octal socket marked "6SN7"*
1	*Octal socket marked "6SL7"*
2	*Octal socket marked "6B4"*
1	*Octal socket marked "5U4"*
1	*5 prong socket marked "SPKR"*
1	*5 prong plug and shield*
4	*Felt mounting feet*
1	*2 lug terminal strip (input)*
1	*Closed circuit jack*
2	*⅜" snap in plugs*
1	*½" snap in plug*
1	*11/16" snap in plug*
1	*Soldering lug*
4	*2 lug resistor mounting strips*
2	*3 lug resistor mounting strips*
1	*1 lug resistor mounting strip*
	Miscellaneous hookup wire and varnished tubing.

mum cut-off position. This range permits complete tonal balance of the system for all audio applications.

During recording at 33⅓ rpm, the high frequencies are greatly accentuated (boosted) to compensate for the reduced velocity encountered when cutting small diameters on a recording disc. This boost is reduced as the cutter travels away from the hub of the disc and approaches the larger diameters with a resulting increase in linear velocity of the whirling disc.

The bass control remains at its normal or mid-setting during recording. If an attempt were made to employ bass boost during cutting, there would be a tendency to over-modulate the record. The result would be distortion in adjacent grooves (crosstalk) or even a cutting through from one groove to the next.

During playback, the process may be somewhat reversed, i.e., a bass boost may be employed and high frequencies may be either attenuated or adjusted to suit the individual listener.

Monitor Channel

One of the requisites for accurate recording is an excellent monitor amplifier and speaker so that sounds entering the cutter may be heard simultaneously. It is not considered good practice to shunt a speaker load across a cutter. The load presented by the speaker varies with frequency. This variation disturbs the normal impedance of the cutter. A separate channel is provided, employing a 6V6, which receives its signal from the 500 ohm output winding of T_2. Operating Class A, the tube draws no grid current and therefore does not take power from the 2A3's.

A separate gain control, R_{30}, permits individual volume control setting of this channel. The output transformer, T_5, terminates in the jack J_3, so that a speaker or wire recorder may be readily connected.

The two load resistors R_{21} and R_{41} provide a fixed load across the output transformer secondaries when external

speaker or cutter leads are removed. This affords proper loading protection to the transformers.

The meter M, is a standard —10 +6 decibel meter calibrated for use across a 500 ohm line. Suitable series resistors are arranged in conjunction with a multiplier switch to extend the meter range to plus 24 db in steps of 6 db. (See Chapter 8.) The values of these resistors are dependent upon the individual make of meter used.

A 10 Watt Amplifier—With Volume Expansion

This amplifier developed by *Thordarson* engineers has a frequency response of ±2 db from 50 to 15,000 cycles and is capable of a power output of 10 watts with less than 5% total harmonic distortion. A volume or tone control has not been included on this unit. 3.5 db of intentional bass boost below 400 cycles has been incorporated in the amplifier circuit to improve phonograph reproduction. The amplifier, Fig. 19-39, employs a volume expansion circuit to compensate for the reduction or compression of the volume range that is present on many disc recordings. This reduction in range being necessary due to the limitations of most sound recording systems. The proper use of this volume expansion feature can impart a realism to recorded music that will approach reproduction of the original.

A new type of volume expansion circuit employing controlled inverse-feedback is utilized in this amplifier. It is a marked improvement over most conventional expander circuits which employ a 6L7 tube using dc bias control of the tube's transconductance. This new expansion circuit does not introduce distortion over any portion of its operating range. The output of this system is free from objectionable thumps and clicks which are usually present in conventional systems due to the control bias pulses being amplified by the signal channel. Also the 12 db of expansion produced by this circuit is equally effective over the entire frequency range.

Briefly, the circuit arrangement and its functions are as follows: the first 6SN7 triode section functions as a signal voltage amplifier stage. This stage is followed by the second section of the 6SN7 duo-triode tube which functions as the variable gain stage. This stage employs cathode degeneration; a form of inverse feedback. Here, the unbypassed cathode resistance R_6 and R_7 is common to both the grid and plate circuits, resulting in a value of amplification far below the tubes normal capabilities. By lowering the value of cathode resistance the feedback will be reduced which will result in an increase in the gain of this stage.

With this circuit volume expansion is obtained by varying the ac cathode impedance of this tube in accordance with the input signal level. To do this a portion of the input signal is taken from the plate circuit of the signal voltage amplifier and is further amplified by the first section of the 6SL7 dual-triode tube. This signal is then rectified by the second 6SL7 section which is diode connected in a shunt rectifier circuit. The rectified voltage is then applied to a time delay network made up of R_{23}, R_{24} and C_{16}. The positive dc control voltage developed across C_{16} is impressed upon the parallel connected grids of the 6SN7 feedback control tube. These grids are initially biased approximately to cutoff by the fixed cathode bias provided by R_{27}. Under this condition the plate-to-plate resistance of this tube, as reflected into the secondary winding of T_2 control transformer, is of a very high value.

Referring to Fig. 19-39 it is seen that the secondary winding is in parallel with the cathode resistance of the variable gain stage. Thus as the input signal rises the increased positive control voltage reduces the reflected plate resistance that shunts the degenerative cathode circuit causing the gain of this stage to rise and produce volume expansion. The design of the control stage is such that the bias pulses are balanced out in the primary of the control

transformer and, therefore, do not enter the signal channel. The input level at which volume expansion begins is controlled by the potentiometer R_{20}. The "take hold" and "release" timing of the expansion action is controlled by the time delay network which has a time constant of .25 seconds on both "take hold" and "release." This value has been found satisfactory for most types of music.

Following the variable gain stage is a 6SN7 self-balancing phase inverter which excites the grids of the 6B4G power amplifier stage. The 6B4G output transformer T_1 has a selection of 6 secondary impedances to accomodate most any speaker arrangement desired.

Dynamic Noise Suppression

This simplified circuit of the *Scott* Dynamic Noise Suppressor diagrammed in Fig. 19-40 uses a 6B8G to provide the necessary voltage amplification so that sufficient drive will be available to the d.c. control circuits for 6SK7 reactance tubes. The desirability of the 6SK7 as opposed to a sharp cut-off pentode such as a 6SJ7 is associated with smooth and continuously variable action of the "gate" circuits. A sharp cut-off tube tends to produce an undesirable "on-off" effect while the transconductance of the 6SK7 may be varied over a wide range. The diodes in the 6B8G envelope are used to rectify the control voltage.

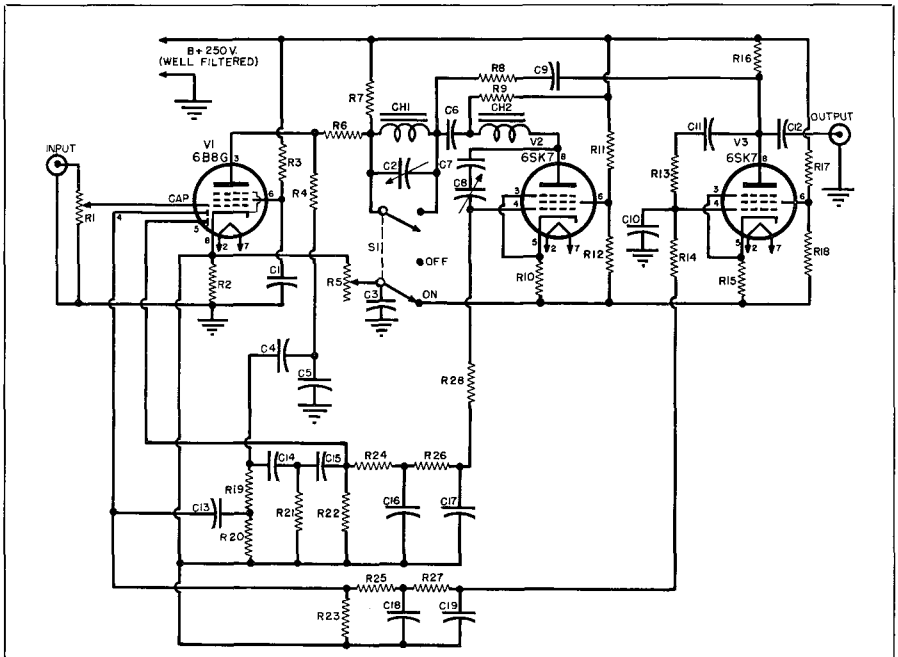

R_1—500,000 ohm pot.
R_2—1,000 ohm, ½ w. res.
R_3, R_9, R_{16}, R_{21}, R_{24}—470,000 ohm, ½ w. res.
R_4, R_6, R_{11}, R_{17}—100,000 ohm, ½ w. res.
R_5—500 ohm, rheostat
R_7—33,000 ohm, ½ w. res.
R_8, R_{28}—47,000 ohm, ½ w. res.
R_{10}, R_{15}—330 ohm, ½ w. res.
R_{12}, R_{18}—5,600 ohm, ½ w. res.
R_{13}, R_{20}, R_{25}, R_{26}, R_{27}—1 megohm, ½ w. res.
R_{14}, R_{19}—220,000 ohm, ½ w. res.
R_{22}—4.7 megohm, ½ w. res.
R_{23}—2.2 megohm, ½ w. res.
C_1—.1 mfd., 400 v. cond.
C_2—100 mmfd., var. air cond.
C_3—100 mfd., 50 v. elec. cond.
C_4—.001 mfd., 200 v. cond.
C_5, C_{14}—500 mmfd., mica cond.
C_6, C_9, C_{12}—.01 mfd., 400 v. cond.
C_7, C_{10}—.002 mfd., 400 v. cond.
C_8—50 mmfd., var. air cond.
C_{11}, C_{17}—.005 mfd., 400 v. cond.
C_{13}, C_{18}, C_{19}—.05 mfd., 200 v. cond.
C_{15}, C_{16}—.01 mfd., 200 v. cond.
S_1—D.p.d.t. switch
CH_1, CH_2—2 hy. choke (Allied X60-801
2—6SK7 tubes
1—6B8G tube

Fig. 19-40. Circuit diagram of the simplified Dynamic Noise Suppressor.

Since it is desirable to provide a control voltage for the high frequency reactance tube derived from the upper fundamentals, and a derivative of the harmonics of low frequencies to drive the low frequency reactance tube, suitable *RC* filter networks are inserted ahead of the diodes. The reason for making the control voltages selective with regard to frequency is to avoid the possibility of the noise (either low frequency rumbles or high frequency needle scratch) from developing sufficient voltage to open the gates.

The rectified control voltage is further filtered by the networks following the diodes and the resultant dc applied to the grids of the reactance tubes. The speed with which the gates will open is largely a matter of the time constants of these networks. The closing speed is also controlled by this factor but is further affected by the maximum voltage to which the condensers have been charged. In other words, if x volts are required to open the gates fully and the signal is sufficiently large to develop $2x$ volts across the filter condensers, they must discharge down to x volts before the gates will begin to close. Thus the closing time is longer for large signals than for medium signals. In general this is desirable because large signals usually require a longer reverberation time for realistic reproduction. In the more elaborate versions of the Scott Dynamic Noise Suppressor these effects may be controlled more accurately by the use of a separate amplification stage for the dc control voltage and arrangements to limit the maximum control voltage that may be developed. However, this is not so important in the more limited range devices as it is in those designed to handle very wide frequency ranges.

The use of the diodes in the 6B8G for rectifying the control voltage requires that the cathode of this tube be used as the effective ground return for all other tubes.

The resistors R_6 and R_7 are selected to divide the voltage properly so that an adequate drive will be available for the control circuits and also to produce a proper input impedance for the gate circuits. The "roll-off" ahead of the sharp dip in the high frequency gate circuit is a function of the value of these resistors. The series filter consisting of CH_1 and C_2 is paralleled and tuned to resonate at 10 kc. It serves the dual purpose of holding down the very high frequencies when the gates are closed and the rise above resonance in the reactance tube circuit is appreciable in a region of considerable noise. It also provides the proper impedance for the shunt reactance tube tuned circuit to "work on." Since the condenser is capable of tuning this inductance over a broad range its inductance value is not extremely critical, but it is important that it be of high "*Q*" design.

The inductance CH_2 is also in a tuned circuit controlled by the condenser C_8 and its value is not critical although the "*Q*" is obviously important. C_7 is simply a blocking condenser to keep the plate voltage off the tuning condenser.

Circuit Analysis

The circuits will involve viewing the tube as a condenser in a tuned circuit. A simple method of understanding the results obtained is to think of it as a feedback device. A portion of the feedback voltage is applied to the grid of V_2 through condenser C_8. The voltage appearing on this grid is in phase with the signal on the plate. The grid voltage causes a corresponding change in plate current which produces a change in plate voltage that is 180 degrees out of phase with the input signal to the plate and is therefore degenerative.

The signal appearing in the grid circuit will vary with frequency in accordance with the characteristics of the network consisting of C_8 and R_{28}. The magnitude of the degenerative signal produced depends upon the transconductance of V_2. Under static conditions this will vary with the cathode bias developed across R_{10} and R_5 as well as the screen voltage. The screen voltage is held relatively constant by the divider R_{11}-R_{12}. For any given frequency the at-

tenuation produced by the degenerative signal on the plate of V_2 will vary with the adjustment of C_8 and the setting of R_5. The results obtained may be superior with lower values of R_{10}, or even eliminating it entirely, but the circuit will then be more critical with regard to tube replacement.

When a signal of sufficient magnitude to develop an appreciable voltage across R_{22} appears, a negative voltage is applied to the grid of V_2, tending to reduce the transconductance of the tube and reduce the magnitude of the degenerative voltage in its plate circuit. This means that a large input signal to the "noise suppressor" will produce sufficient negative voltage on the grid circuit of the reactance tube to lower the effective gain and the magnitude of the degenerative voltage in its plate circuit.

For this reason the circuit is effectively tuned to a higher frequency when the tube is shifted toward cut-off. These same principles apply to the low frequency reactance tube V_3 except that the signal applied to its grid is produced by a network consisting of a shunt capacitance C_{10} and the resistor R_{14}. This produces a predominance of low frequencies in the grid circuit and a corresponding low frequency degenerative signal in the plate circuit.

The inductance CH_2 is selected to make this circuit resonate sharply to produce a sharp cut-off instead of the roll-off that would be obtained with only an effective shunt capacitance, represented by the reactance tube V_2.

S_1 is used to eliminate the 10 kc filter under conditions of no suppression and opens the cathode circuit of both reactance tubes, cutting them off completely and eliminating any effect from them.

Circuit Adjustment

The circuits are virtually eliminated under conditions of "no suppression." In tuning these circuits the procedure is to switch S_1 to the "on" position and unsolder the lead from the bottom part of S_1 that goes to R_{10}. This leaves the series filter in the circuit but eliminates the reactance tubes. Now. feeding an oscillator (set to 10 kc.) into the input of V_1, tune C_2 for a maximum dip at 10 kc. Next disconnect R_4 from the plate of V_1, switch S_1 to the "on" position, reconnect the lead from R_{10} to the bottom part of S_1, and connect a temporary short across the upper terminals of S_1 (across C_2) thus eliminating the 10 kc filter but making the reactance tubes effective.

With R_5 set for minimum resistance in the circuit and the oscillator set for approximately 4500 cps tune C_8 for a maximum dip at this frequency. An output meter may be used for this purpose but it is better to observe the output on an oscilloscope. Now it will be found that adjustment of R_5 to introduce an increasing amount of resistance in the circuit will effectively tune the maximum attenuation dip toward higher frequencies.

This adjustment is used in operating the *Dynamic Noise Suppressor* to determine the frequency where the gates cut-off when they are closed completely. With very good records this control may be operated with almost a maximum of resistance introduced so that the cut-off even when the gates are closed will be above 4500 cps while with very poor records it will be desirable to operate the control for minimum resistance so as to cut off at lower frequencies. This control may be ganged with S_1 although this is complicated by the availability of suitable components. Under conditions of no suppression, S_1 of course should be used in the "off" position.

In order to observe the operation under effective dynamic conditions, it is necessary to employ two oscillators. One oscillator is fed into the input of the 6B8G and the other oscillator is connected between R_4 (at the point where it was previously disconnected from the plate of V_1) and the cathode of V_1. Now with the output of the oscillator which is connected to R_4, set at zero, the oscillator fed to the input of V_1 is adjusted to provide a signal at, say, 4500 cps with S_1 in "off" position. With R_5 set for minimum resistance in the circuit, switch S_1 to the "on" position. If the

output is observed on an oscilloscope during this procedure the signal will be observed to be greatly attenuated when the switch is operated as indicated.

The output of the oscillator connected to R_4 should now be adjusted to approximately 2000 cps and the output level slowly increased. It will be seen that this will effectively drive open the gates and bring the 4500 cps signal back in the direction of no attenuation.

Location of Suppressor

The point at which the noise suppressor circuits are connected in any given amplifying system is, of course, extremely important. If they are connected too near the input and with excessive gain following them, the hum pickup from the inductances may be amplified to an irritating level. If they are connected too far back in the amplifier, the drive to the grids of the reactance tubes may introduce distortion. If the drive to the reactance tube grids is too high, a certain amount of grid rectification will take place with serious distortion. This may be readily observed on the oscilloscope by observing the output in the attenuated regions blown up sufficiently on the screen to see the waveform.

If the circuits are properly adjusted, there will be no observable distortion at any frequency. If the gates are being overdriven, the waveform in some sections of the attenuated region will be seriously distorted. This distortion will be evident under conditions where the gates are driven partially open by a control voltage, but will not appear when the gates are driven fully open. Such an indication clearly shows the introduction of the distortion by the gate tube circuits. If the input signal is of the correct magnitude, this will not be observed and the signal will be entirely clean in all sections of the spectrum under all conditions of gate circuit operation.

This distortion is not a problem of the same kind that is introduced in various volume expander circuits where a variable mu tube is used as an amplifier. The function of the reactance tube circuits is concerned with the proper *percentage* of the signal being fed to the grids and the principles will hold for any given amount of signal supplied, provided it is not so high as to cause grid circuit rectification. Consequently, the operating point with regard to signal amplitude may be chosen to preclude the possibility of distortion on peaks and yet be sufficient so that excessive amplification is not needed in following circuits. This condition is also less troublesome because on peaks where distortion might be otherwise introduced (if the choice of signal amplitude is not optimum) the gates are driven open and the reactance tubes effectively made inoperative. Then any distortion that might be present is observable only under conditions of attenuation. This is not intended to indicate that the distortion introduced by an excessive signal level to the gates is unimportant, but that it is not always easy to observe and should be watched for and investigated with care.

This version of the Dynamic Noise Suppressor will provide, with optimum adjustments, satisfactory operation out to approximately 6000 cycles. If it is desirable to increase the roll-off, where the majority of records played have unusually poor signal-to-noise ratios, a small condenser may be inserted from the junction of R_6 and R_7 to ground. This may approximate 250 mmfd. and will also aid in holding down any tendency of the resonant circuit to permit a rise above cut-off. If it is desirable to broaden the response range, an additional reactance tube may be used instead of this condenser and the values may be approximately the same as those of V_2.

The inductance CH_2 is not required in such a circuit. If very wide range response is desired, additional complete filter sections may be added, tuned to increasingly higher cut-off frequencies. In either case the control voltage to these additional circuits may require an additional section of filtering in order to eliminate possibilities of in-phase sig-

nals to the grids of the reactance tubes producing oscillation or distortion. Abrupt surges in the plate circuit of the low frequency reactance tube may appear in the output of the amplifier if the low frequency response is extremely good and this may be minimized by the choice of value for C_{12} or other coupling condensers. If it is introduced by the filtering characteristics of the control circuits, it may be controlled by an additional filter section. Resistors R_{23} and R_{22} determine the closing speed of the gate circuits and may be changed in value by the individual designer in order to produce faster or slower closing of the gates. These may be reduced to as low as one megohm or even a half megohm. Optimum values will depend to some degree on the taste of the listener, the importance of reverberation in the type of recordings most played and the signal-to-noise ratios of the average records to be reproduced.

Volume Expansion Effect

If the reactance tube circuits are adjusted so that the effective "Q" of the circuit is poor, there will be a large resistive component. This means that the shunting effect of the circuits under conditions of closed gates will be apparent to some degree at all frequencies. Consequently, when the gates are driven open the response at all frequencies will be increased to some degree. This effect may be deliberately introduced to produce volume expansion.

One way to accomplish this is to change the resistor from screen to ground in the low frequency reactance tube circuit. Adjustment of the screen voltage for maximum "Q" is fairly critical. In general, it is desirable to minimize the effect of volume expansion to 2 db or less. The effect may be deliberately introduced by inserting a potentiometer in place of the screen-to-cathode resistor. The value should be around 10,000 ohms and varying this resistor will produce varying degrees of volume expansion. As much as 15 db may be obtained. The expansion will take place simultaneously with the opening of the gate circuits. In these circuits it must be remembered that a really complex effect is obtained if the frequency response and over-all amplitude is being expanded simultaneously. The desirability of this effect, except in very limited amounts, is questionable.

Although this version of the Scott Dynamic Noise Suppressor does not permit sufficient broad-band response to provide maximum frequency response from transcriptions and commercial pressings of exceptional quality, it does permit superior results on average records over what may be obtained with conventional tone controls. Most commercial records do not have appreciable response in the very high ranges. If it is borne in mind that many high quality theater sound systems are not required to reproduce frequencies beyond approximately 7500 cps, and that music reproduction in high quality theater installations from sound-on-film is considerably closer to reality than the very great majority of phonograph record reproducers, it will be evident that a system capable of actually reproducing a flat response to 6000 cps and with contribution beyond this frequency and a minimum of noise, will do a very satisfactory job of reproducing most records, and will be very much superior to the average commercial machine that cuts off abruptly at 4500 cps in order to minimize noise.

Low-distortion Volume Expansion

The interest recently shown in high-quality reproduction of recorded music, as well as of radio broadcasts, has led to the design and manufacture of a number of high-fidelity amplifiers. See Chapter 21. A renewed interest in volume expansion has resulted. This interesting development still has its opponents, but is nevertheless coming to be recognized as a valuable addition to any audio system for the reproduction of recorded and broadcast music.

The reason for its usefulness is the compression that takes place in broadcasting or recording, introduced to hold the dynamic range within limits deter-

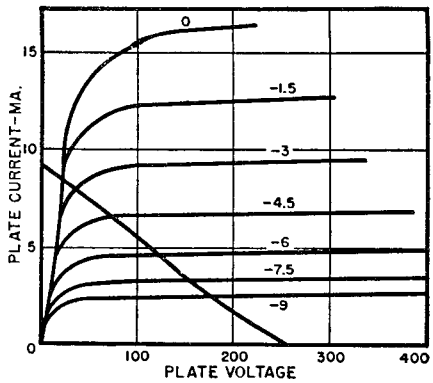

Fig. 19-41. Characteristic curves of 6SK7 with load line drawn as explained in the text. Numbers on curves are values of control grid bias. Screen grid is at 100 volts.

mined by various factors. This compression detracts from the vitality of music, but the full dynamic range can be restored by expansion. This does not necessarily mean that the reproduction is exactly the same as the original, for the compression is manual and does not follow any mathematical law. Furthermore, due to the nature of all expansion systems, sharp transients, like isolated drum beats, are not expanded. The reason for this will become evident later.

In spite of these facts, comparison of expanded and unexpanded reproductions of a phonograph record will convince almost anyone that expansion is desirable.

Numerous circuits have been devised to accomplish the desired effect. Most of them have the disadvantage that considerable distortion is introduced into the amplified signal. In particular, a very well-known circuit using a 6L7 causes severe distortion with an input level of any reasonable magnitude. Many other arrangements make use of variable-mu pentodes connected in various ways and similarly cause appreciable distortion. Furthermore, there is practically no published data regarding the gain, perform-

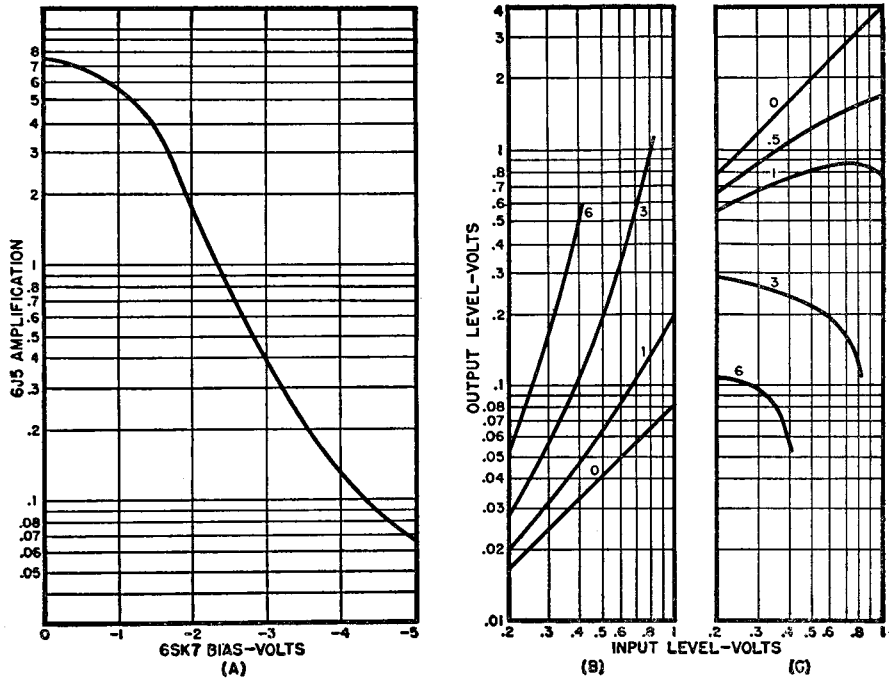

Fig. 19-42. (A) Relationship between the voltage amplification of the expander and the bias on the 6SK7 control grid. (B) and (C) Performance curves for the circuit connected as an expander and compressor, respectively. The numbers on the curves denote the amplification of the signal fed to the 6SK7 grid.

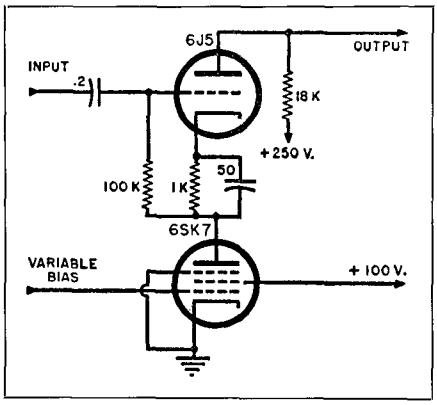

Fig. 19-43. The basic expander circuit, with typical circuit constants.

ance, or circuit-constant calculations of such expanders, and the designer is forced to locate little-known tube characterisics charts to estimate these factors himself.

The circuit discussed[2] here is not new; it was first published in 1938 by J. B. Stevens.[3] The original article did not go into detail regarding the design of the expander. In addition, Australian tubes were specified and there has been some question as to their American equivalents. The expander has the very great advantage of extremely low distortion. Expansion is, as a matter of fact, accomplished with a triode by varying the amount of feedback. The only consequential disadvantage to the arrangement is that it attenuates rather than amplifies, and hence requires an extra stage of amplification. The performance of the circuit is easily calculable, however, which is of very great assistance to the designer.

The circuit shown in Fig. 19-43 gives the constants that were calculated as will be shown below. The 6J5 triode has a load consisting of the 18,000 ohm resistor and the 6SK7 tube in series; the latter portion is also in the input circuit and, as is well-known, acts degen-

[2]Boegli, Charles P., "Low Distortion Volume Expansion," Radio-Electronic Engineering edition of Radio & Television News, Oct. 1947.

[3]Stevens, B. J., "Low Distortion Volume Expansion," Wireless Engineer, March, 1938. Vol. 15, p. 143.

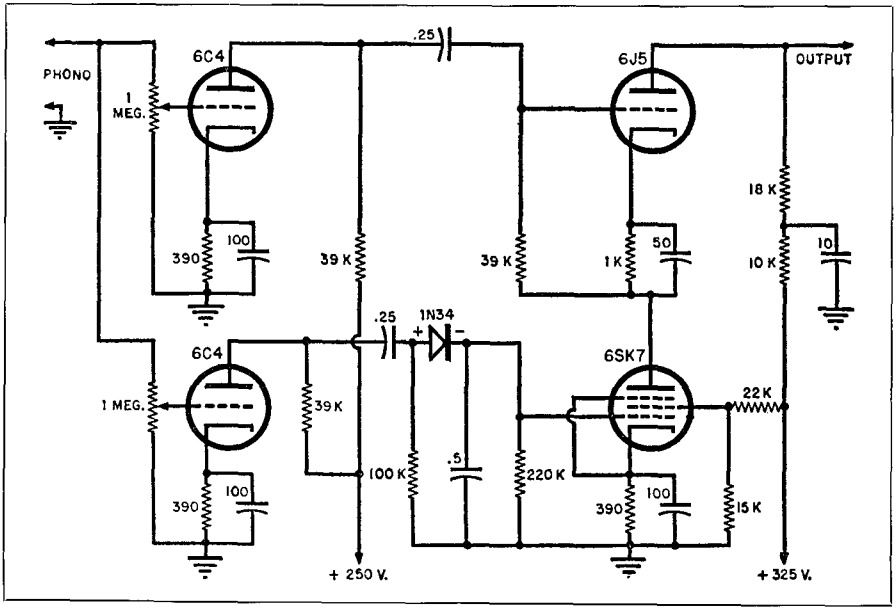

Fig. 19-44. Typical voltage amplifier circuit, incorporating the expander.

eratively. In principle the resistance of the 6SK7 is made to vary with the signal so that the gain of the stage varies in the desired manner.

In the original article mentioned previously, the plate resistance and amplication factor of the 6J5 were assumed constant. That assumption will not be made here, so the resulting performance curves should be quite accurate. The first step in the design is to determine the value of the grid bias resistor for the 6J5 so that there is no danger of positive grid swing. This is done more or less by hit and miss; a value of 1000 ohms, specified in Fig. 19-43, is quite conservative and should serve most purposes. This resistor is bypassed with a suitable condenser; the size shown provides for a cut-off at 30 cycles per second.

We now assume a series of plate currents which, obviously, flow through both the 6J5 and the 6SK7 in series. The actual 6J5 grid biases may be calculated from the value of the bias resistor and these assumed plate currents. With these grid biases and the plate currents, a series of operating points can be located on the 6J5 plate characteristics chart. The plate resistance and the amplification factor of the tube must then be found at each operating point.

Fig. 19-45 shows the results of these calculations for the circuit shown in Fig. 19-43. The plate resistances were found by arithmetical differentiation of the plate characteristic curves and were rounded to correspond to the expected accuracy of the curves. The load resistor was chosen so that its resistance plus the minimum resistance of the 6SK7 tube, (Table I), is as small as possible. This requires a little more trial-and-error calculation, but the value shown in Fig. 19-43 is approximately correct. The resistance is actually not extremely critical.

The next step is to calculate the performance of the 6SK7 tube. Once the resistance of the 6J5 is known, this presents no special difficulties. Again, a series of plate currents—the same as those above—is assumed, and the corresponding 6SK7 load resistances are found by adding the plate resistance of the 6J5 to its load resistance. Each load resistance represents a load line on the 6SK7 plate characteristics chart that is, however, valid only for the assumed plate current. This means that we have a series of points lying on the actual load line of the 6SK7, which is itself curved, as shown in Fig. 19-41.

We may now assume a series of control grid biases on the 6SK7 and compute the plate resistance of this tube in the same manner as we did for the 6J5. The results of these calculations are shown in Table I. The performance of the stage can now be found. The voltage amplification is given by the equation

$$V.A. = \frac{\mu R_L}{(\mu + 1)\, R_p + r_p + R_L}$$

where R_L is the triode load resistor, μ is the triode amplification factor, R_p is the pentode plate resistance, and r_p the triode plate resistance, all taken at some fixed plate current. For the circuit of Fig. 19-43, the results are plotted in Fig. 19-42A as a function of the bias on the 6SK7. If it is found desirable to operate between −4.5 and −1.5 volts bias, there would be about 34 decibels of expansion available, far more than enough for almost any purpose. The practical limitation to the negative grid bias is the allowable heater-cathode voltage for the

Grid Bias	0	—1.5	—3.0	—4.5	—6.0	—7.5
Plate Current (MA.)	8.80	8.50	8.10	6.50	4.60	3.25
Plate Voltage, V	22	22.5	38.0	75	115	155
Plate Resistance (Ohms)	1,000	3,000	44,000	200,000	400,000	3,000,000

Table I. Plate risistance of 6SK7 for various values of control grid bias.

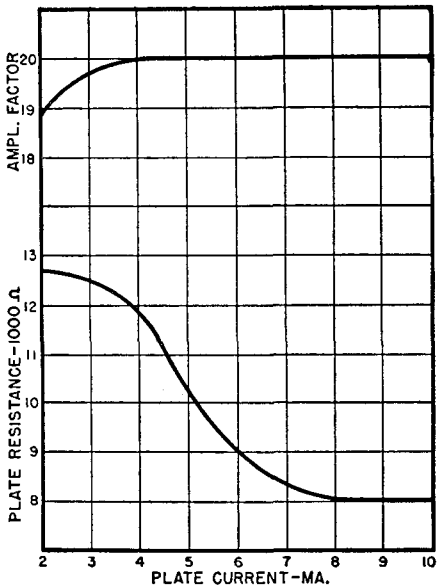

Fig. 19-45. Variation of amplification factor and plate resistance of the 6J5 with plate current, for circuit of Fig. 19-43.

6J5 which, if the heater supply is grounded, is equal to the plate voltage on the 6SK7. This voltage is 75 when the grid bias is –4.5 volts, which leaves a 15 volt margin of safety.

A practical circuit using this expander is shown in Fig. 19-44. The signal from the phonograph pickup, assumed to average about 0.4 volt, is fed through a 6C4 with a gain of 12, and into the grid of the expander 6J5. The signal is also sent through another 6C4 rectified with a 1N34 selenium rectifier, and passed through a time-delay network into the grid of the 6SK7. The rectifier is so connected that positive bias is delivered to the 6SK7, which counteracts the 4.5 volts negative bias already provided.

With the curve of Fig. 19-42A, an idea of the performance of the circuit of Fig. 19-44 may be had. This is done by assuming the expansion control set so that the bias fed to the 6SK7 is, say, 0, 1, 3, and 6 times the average signal level from the pickup. For the sake of simplicity it can also be assumed that the signal is fed from the pickup directly into the 6J5 grid, or that the amplification of the upper 6C4 is 1. If the results of such calculations are plotted, the curves of Fig. 19-42B result. In an ideal expander the curves would be straight lines. Fig. 19-42B shows that the expander described is not far from ideal.

As a matter of interest, the circuit can be reconnected as a compressor by making the initial bias of the 6SK7 –1.5 volts and reversing the connections to the 1N34 so that it supplies negative bias to the 6SK7 grid. The curves of Fig. 19-42C show, however that the performance of such a compressor is likely to be tempermental, and at its maximum setting, the loud passages would come through a great deal softer than the soft ones! While it might be curious to hear such reproduction it certainly would serve no useful purpose.

In designing an amplifier incorporating the expander stage shown in Fig. 19-43, its gain can be assumed as 0.085, which is the value with zero expansion. A slight disadvantage of the circuit is that the plate resistance of the 6J5, viewed from the next stage, is increased, as it always is with constant-current feedback. The expander should consequently be followed by a pentode or low-mu triode to minimize the harmful influence of the *Miller* effect. On the other hand, the input capacitance of the expander triode is reduced, so that it would not be expected that the expander itself would have any detrimental effect on the high frequency demand of the amplifier.

CHAPTER 20

Preamp—Equalizers

Design data and analyses of several commercial preamplifiers and equalizers for phono reproduction from crystal, magnetic and strain-sensitive cartridges.

● Although in fairly common use with microphones, so-called "preamplifiers" were relatively unknown in connection with phonograph pickups until the marketing of the *Caltron, General Electric, Pickering, Audax* and other magnetic cartridges of very low output made them necessary. The "phono" input of most amplifiers prior to this time required about 0.5 volt to fully drive the power stages, and these new cartridges produced a signal of an amplitude only a fiftieth of that required for full output.

More recent magnetic cartridges furnish substantially higher outputs and can often be connected directly to the low-gain input of an amplifier but the introduction of equalization, so necessary to compensate for the multitude of recording characteristics in existence, invariably reduces the pickup output again to too low a value for most amplifiers. There are three solutions to this problem; first, the equalized pickup signal can be fed into the "microphone," i.e., high gain channel of the amplifier; second, a special "magnetic phono" input can be provided with subsequent equalization, as in many modern amplifiers; and third, a combined preamplifier-equalizer separate from the main amplifier can amplify the signal to the proper value for the low-gain input.

The first arrangement has many disadvantages. Equalizer design is not only apt to be dependent upon the cartridges in question, but particularly in the case of low-output cartridges the level of the equalized signal will be so low that hum pickup in the connecting cables and tube noise in the first amplifier stage will reach an objectionable level. It is always desirable to keep weak signals at their maximum possible levels in order to increase their magnitude in relation to hum pickup and tube noise, and this requirement indicates that the equalizer should be located at some later point in the amplifier where its attenuation will be of little consequence. The second method accomplishes this objective satisfactorily but it, too, suffers from several shortcomings. The amplifier is often located at some distance from the pickup and it is then usually impossible to arrange a convenient means for inserting various equalizers. Most amplifiers equipped with a magnetic cartridge input therefore have only a single equalizer, and from what will be said later about recording characteristics it will become manifest that such an arrangement is absolutely insufficient.

The last alternative, the separate equalizer-preamplifier, has none of these drawbacks. Means are easily provided right at the turntable for switching various equalizers into the circuit. At the same time these equalizers can be located at a point where signal strength is many times the tube noise level. The full cartridge output is fed through a short

cable into the first grid, and the preamplifier output is sufficiently great that hum pickup even in fairly long high-impedance lines is easily eliminated. The sole disadvantage of the preamplifier is the necessity either for a separate power supply or for obtaining supply voltages from the main amplifier via a cable. The latter is generally the better arrangement by virtue of the superior filtering available, but this power-supply cable is seldom a cause of much inconvenience. The separate preamplifier is the only satisfactory means of utilizing older amplifiers with the new magnetic pickups.

A PREAMP FOR MAGNETIC AND CRYSTAL PICKUPS

The first equalizer-preamplifier to be described in this chapter was originally intended for use with a high-output magnetic pickup; it has a gain of 30 at 1000 cps and therefore supplies a signal of 3 volts with an input of 100 millivolts. Even with a 10-millivolt input the output will be sufficient for most amplifiers. It was designed to provide a separate equalizer specifically tailored to each make of commercial pressings now on the market, the proper equalizer to be selected by means of a switch.[1]

Although originally intended for use with magnetic pickups the preamplifier to be described can also be employed to great advantage with crystal cartridges. For this purpose the crystal unit is made "velocity-responsive" by loading it with a very low resistance, which simultaneously reduces the output voltage to the proper magnitude and effects a remarkable improvement in the quality of reproduction.

The preamplifier itself consists of two conventional high-mu triodes in cascade. The 6SL7GT is admirably suited to the purpose. As with all high-mu triodes, certain precautions must be taken to prevent high-frequency attenuation from the *Miller*-effect capacitance. Particularly in the case of the 6SL7GT, when operating at a gain of 30, the input capacitance is in the order of 100 $\mu\mu$fd, which means that a resistive source impedance no greater than 75,000 ohms can be tolerated if response is to be down 3 db at 20 kc. This offers little difficulty in the first stage because both magnetic and crystal cartridges will be loaded with lower resistances. The input to the second stage, however, is more critical. In this preamplifier the equalizers are located between the first and second stages and the input resistance to the second stage can thus be reduced to the required level. This location of the equalizers has the further beneficial effect of reducing the signal input to the second stage to the point where it is easily handled without noticeable distortion.

The equalizers all have an amplification of about 0.022 at 1000 cps; even at 20 cps the amplification is generally only 0.32 so that at this low frequency, a —2 volt bias on the second stage will easily permit a signal input of 0.1 volt to the first stage. This is considered adequate for the entire range of available magnetic pickups and is also suitable for crystal pickups if they are properly loaded. The minimum input voltage is determined by the required output signal but a 0.01-volt signal provides a 0.3-volt output at 1000 cps, which is sufficient for most amplifiers.

The preamplifier circuit is shown in Fig. 20-1. The cathodes are heavily bypassed to prevent loss in gain and to reduce hum introduced by the heaters. This, coupled with the low grid-current impedances, reduces noise to a very low value. The main requirement is for a

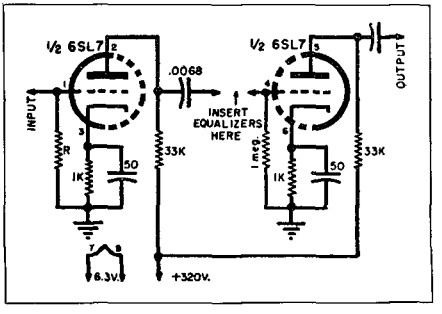

Fig. 20-1. Circuit diagram of preamplifier.

[1]Boegli, Charles, "A Preamp for Magnetic and Crystal Pickups." Radio and Television News, July, 1950, p. 36.

well-filtered "B" supply, which must be adequately decoupled from the remainder of the amplifier to prevent motorboating. The plate current requirement is about 5 ma. so if desired this decoupling can be carried out with a high-inductance audio coupling choke and a high-value electrolytic condenser. The circuit components were chosen for a 320-volt "B" supply after decoupling; for a 250-volt supply the same values can be used but the permissible input is somewhat reduced.

Magnetic cartridges are connected directly to the grid of the first tube, which is loaded with the resistance *R*. This resistance is usually specified by the maker of the cartridge with a view toward reduction of needle scratch and high-frequency drop. Crystal cartridges should be loaded with sufficient low resistance to bring the 1000 cps response to no more than 0.1 volt; for a 0.001-μfd cartridge with an open-circuit output of 1.0 volt. *R* is about 16,000 ohms. This resistance is usually low enough to insure constant-velocity response over the entire range. With some pickups this resistance can be chosen so as to eliminate, to a large degree, the high-frequency peak arising from needle resonance. The load resistance then equals the impedance of the cartridge at the point where treble response is up 3 db from needle resonance. This low load resistance improves the damping of the input circuit and results in markedly reduced needle scratch and cleanness of reproduction.

Equalizer Design

Equalizers to correct the major modern pressings and the predominant older ones have been designed and are inserted in the preamplifier at the point indicated in Fig. 20-1. Electrically the only requirement is that the input impedance be high enough to avoid loading the first tube excessively, and the output impedance be sufficiently low to avoid high-frequency drop from the *Miller*-effect capacitance of the second tube. In addition to this, the attenuation of all the equalizers should be the same at, say, 1000 cps to avoid the necessity of adjusting the amplifier gain substantially when the equalizers are changed.

Flat, 250 cps turnover. The equalizer to correct for records with a turnover at 250 cps and a flat treble characteristic is shown in Fig. 20-2A, together with its response curve. This equalizer is used with British H.M.V. and a number of other European pressings.[2] It should also be tried with any American pressings that have been recorded in Europe.

Flat, 500 cps turnover. Fig. 20-2B shows the equalizer for a simple 500 cps turnover characteristic. This circuit is employed for a good many American pressings of older vintage.

Flat, 1000 cps turnover. For a 1000 cps turnover the equalizer given in Fig. 20-2C is satisfactory, but there is slightly greater bass drop than with the two previous circuits. This equalizer will rarely be used but the characteristic is followed on some European recordings.

If the minimum number of equalizers is desired, those for 250 cps and 1000 cps turnover can be omitted. There is only a slight audible difference between the three when playing a given disc.

NARTB characteristic. The NARTB curve is followed in *Artist, Capitol, M.G.M.*, and many other American pressings. It is characterized by a low frequency turnover at 500 cps and a treble preemphasis of 6 db per octave commencing at 1590 cps. The equalizer of Fig. 20-2B is easily modified for this purpose by shunting the output with a condenser as shown in Fig. 20-3B. Although this simple addition results in a slight deviation from the ideal in the vicinity of 1590 cps the variation has been found by measurement to be exceedingly small and this circuit gives excellent results.

[2]Mittell, B.E.G.: "Commercial Disc Recording and Processing." Lecture delivered to the radio section of the Institute of Electrical Engineers, December 9, 1947. (Printed copy supplied by Electrical and Musical Industries, Ltd., Hayes, Middlesex, England.)

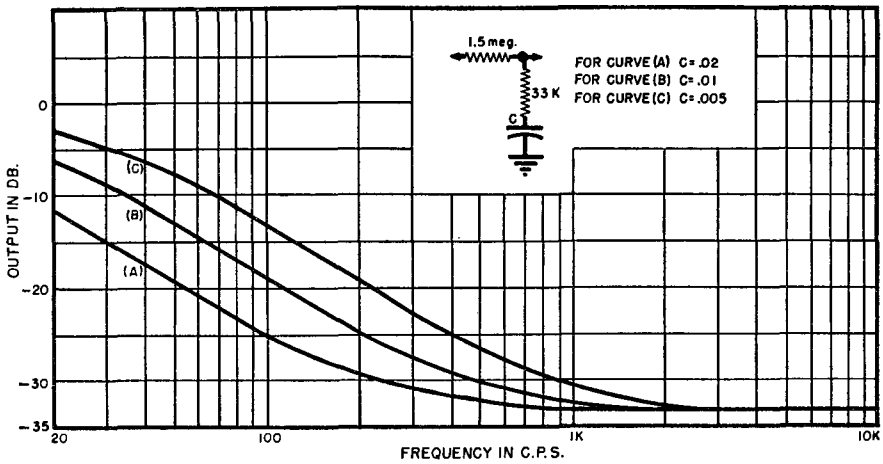

Fig. 20-2. (A) Equalizer for flat recordings with 250 cps turnover. (B) Equalizer for flat recordings with 500 cps turnover. (C) Unit for flat recordings with 1000 cps turnover.

Columbia Microgroove characteristic. The recording curve for *Columbia* Microgroove records differs from the NARTB curve in that extra bass emphasis is provided, amounting to 3 db at 100 cps.[3] This is corrected by adding another resistor to the NARTB equalizer as indicated in Fig. 20-3A.

[3]Pickering, N. C. and Goodell, J. D.: "Reproduction of Microgroove Recordings." RADIO NEWS, October 1948, p. 40.

Columbia 78 rpm characteristic. Recent standard *Columbia* records are reported to follow the NARTB curve except that the low-frequency turnover is at 300 cps.[4] The equalizer is illustrated in Fig. 20-4C; the lower turnover requires only a few changes in the NARTB equalizer.

[4]St. George, P. W. and Drisko, B. B.: "Versatile Phonograph Preamplifier." Audio Engineering, March 1949, p. 14.

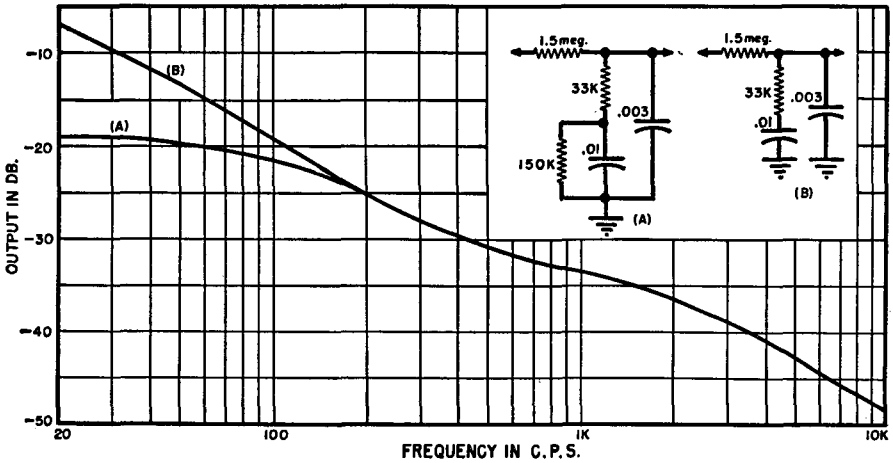

Fig. 20-3. (A) Equalizer for Columbia Microgroove recordings and its frequency response curve. (B) Equalizer and response curve for the NARTB Standard recordings.

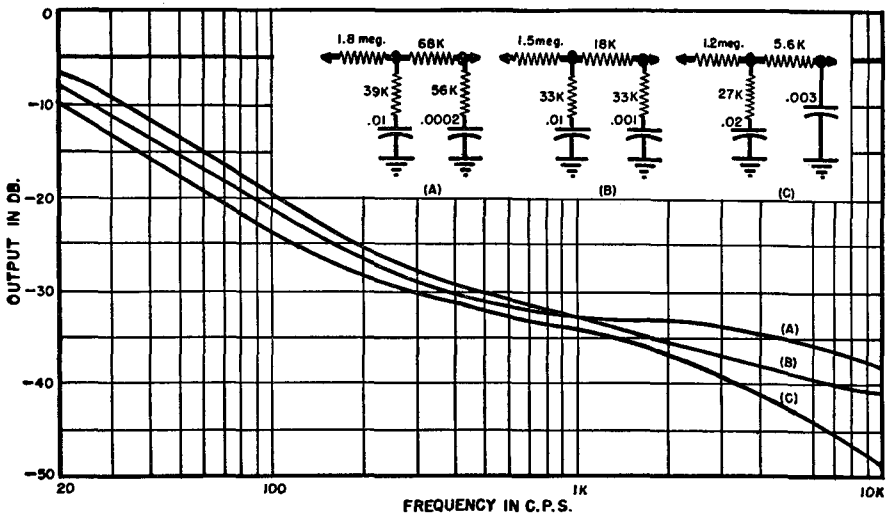

Fig. 20-4. (A) Equalizer and its response for Decca FFRR records. (B) Frequency response and equalizer for Victor 78 rpm records. (C) Equalizer and response for Columbia 78 rpm records.

Victor 78 rpm characteristic. Standard *Victor* pressings of recent date are said to have a low-frequency turnover of 500 cps and a treble preemphasis of 2.5 db. per octave beginning at 1000 cps.[4] This treble characteristic is not as easy to correct as the previous ones but the equalizer of Fig. 20-4B does a fairly good job of it.

Decca FFRR characteristic. These English high-fidelity records have a low-frequency turnover at 400 cps; the treble preemphasis amounts to 3 db per octave beginning at 3000 cps.[5] The equalizer is illustrated in Fig. 20-4A.

Equalizer construction. The equalizers themselves can be made very compact by utilizing half-watt (10% tolerance) resistors and the small paper condensers now being manufactured by several companies for use in miniature equipment.

AN IMPROVED EQUALIZER-PREAMP

The preamplifier, described in previous paragraphs, incorporating a 6SL7GT tube, is suitable for use with either crystal or magnetic pickups. This

[5]Hallows, R.: "Transatlantic News." Radio Craft, June 1947, p. 33.

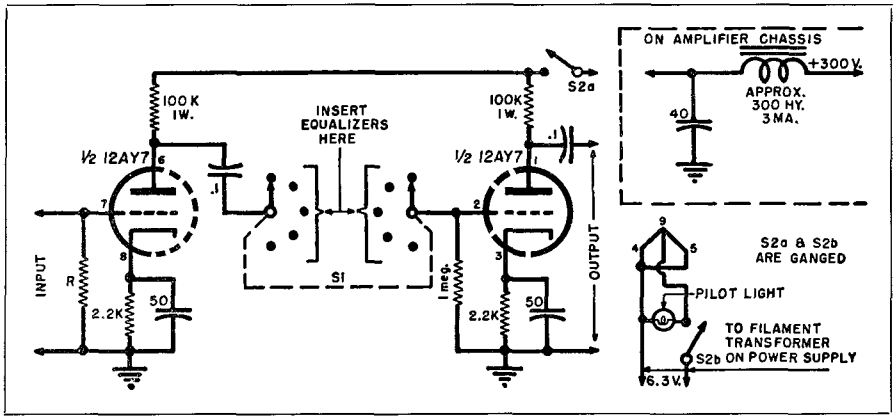

Fig. 20-5. Circuit diagram of preamplifier. Equalizers connect to Switch S_1.

unit gives very satisfactory service in conjunction with pickups of relatively high output voltage but it leaves a little to be desired in the way of freedom from hum and noise when used to amplifiy the output of very low-voltage cartridges.

The 12AY7 tube recently marketed by *General Electric* is specifically tailored for low-level audio service.[6] When properly utilized it is superior to ordinary triodes, especially with respect to freedom from hum and microphonics, and it was therefore selected for this application. For low-hum service the two heater sections of this tube are paralleled and connected to 6.3 volts, and for this reason the convenience of using the preamplifier with sets having 6.3 volt tubes is not lost.

Fig. 20-5 is the circuit diagram of the preamplifier.[7] *R* is the pickup load resistance specified by the manufacturer of the magnetic cartridge to be utilized, while for most crystal pickups *R* should be around 15,000 ohms. With a 300 volt "B+" supply the maximum voltage input to each section is 3.5 volts. The signal to the first section is normally so small that distortion in this stage is negligible. The gain of the stage is 30; if no equalizer were provided between stages a signal of 110 mv to the first grid would drive the second stage to capacity. The effect of the inserted equalizer is to reduce high-frequency signals to the point where distortion is the second stage is also negligible. Lower frequencies are passed with less attenuation but since those below the turnover are attenuated on comercial recordings, no additional distortion results. The net result is that almost complete freedom from distortion is attained without the employment of feedback.

[6]Knight, C. R. and Haase, A. P.: "A Low-Noise Input Tube," Radio-Electronic Engineering, March, 1949.

[7]Boegli, Charles: "An Improved Equalizer-Preamp," Radio and Television News, April 1951.

The equalizers are substantially the same as those designed for the earlier unit with the exception of the input resistors, which are reduced to the smallest size consistent with good response. The specified input resistance establishes the gain of the entire unit at approximately 36. If the preamplifier is to be used with a high-output (50-100 mv) magnetic cartridge or a crystal pickup it will be advantageous to make the input resistors 1.5 megohms because this size results in slightly better bass response. It is not possible to reduce the input resistors to less than 820,000 ohms without seriously affecting bass response; the gain of 36 can, therefore, be considered the maximum attainable from a phonograph preamplifier utilizing a single 12AY7 tube.

Table 1 shows equalizers for a variety of purposes and gives examples of well-known discs for which each is designed. Although it is entirely possible to incorporate the complete set into the preamplifier, satisfactory compensation can be made for the majority of pressings with a smaller number of equalizers. The last column has been included in the table to aid in making a sensible selection. It should be mentioned that *RCA Victor* does not publish its recording characteristics, and equalizers for its discs are based on curves determined from listening tests by a number of observers. If any uncommon equalizers are desired they can be calculated easily and rapidly by means of a recently-published design chart.[8]

Some engineers have advocated the use of two-section, instead of single-section, equalizers for bass compensation, holding that in this manner a sharper turnover is obtained.[9] Calculation seems to show, however, that this is not always the case and furthermore that the two-section equalizer suffers from some special disadvantages. Fig. 20-6 illustrates

[8]Boegli, Charles: "Equalizer Design Chart," Electronics, April, 1950.

[9]McProud, C. G.: "Recording Characteristics," Part 2, Audio Engineering, January, 1950.

EQUALIZER	CIRCUIT	ACCURATE COMPENSATION FOR	MAY ALSO BE USED FOR
(A) Flat 250 cps	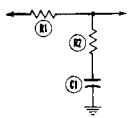	H.M.V. English Columbia	
(B) Flat 500 cps	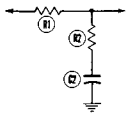	Capitol-Telefunken; most European and earlier American.	H.M.V.
(C) NAB	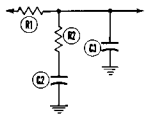	Capitol; Artist; most late American except RCA, Columbia	Columbia 78 Columbia 33.3
(D) Columbia 78	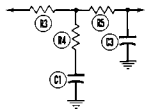	Columbia 78	
(E) Columbia 33.3	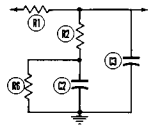	Columbia 33.3	
(F) RCA 78 RCA 45	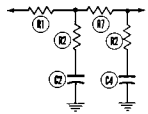	RCA Victor 78 RCA Victor 45	RCA Victor 33.3 Concert Hall 78
(G) RCA 33.3	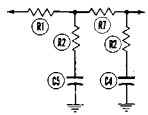	RCA Victor 33.3	RCA Victor 78 RCA Victor 45
(H) FFRR	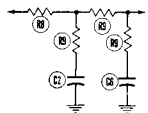	London FFRR Decca FFRR	

R_1 is 820,000 ohms or over (see test)
R_2 is 33,000 ohms
R_3 is approximately .8 x R_1
R_4 is 27,000 ohms
R_5 is 5600 ohms
R_6 is 150,000 ohms
R_7 is 18,000 ohms
R_8 is approximately 1.2 x R_1
R_9 is 39,000 ohms
C_1 is .02 μfd.
C_2 is .01 μfd.
C_3 is .003 μfd.
C_4 is .001 μfd.
C_5 is .006 μfd.
C_6 is 250 μμfd.

Table 1. Various equalizer designs and their applications. All popular make discs are covered.

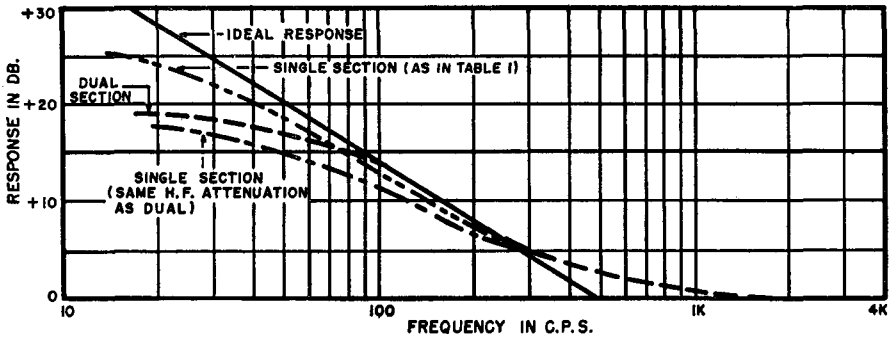

Fig. 20-6. Comparison of response curves for flat, 500 cps equalizer shown in Table 1B.

the characteristics of each type for a 500 cps turnover. If the high-frequency attenuation for the single section is fixed at that which automatically results for a two-section equalizer, the latter provides a more desirable response than the former; the low-frequency response is down 3 db. from the ideal at 90 cps for the single and at 50 cps for the dual. The performance of the single section can be improved, however, by accepting greater high-frequency attenuation. This is not possible with the two-section unit. For the equalizer shown in Table 1B the response is down 3 db at 25 cps, as indicated by Fig. 20-6.

The output impedance of the last 12AY7 section is about 20,000 ohms. If the signal is fed from this stage into a low-mu triode with an input capacitance of approximately 50$\mu\mu$fd, an additional 110$\mu\mu$fd will bring the treble response down 3 db at 50 kc, which is not considered objectionable. This capacitance is equivalent to about four feet of single-conductor shielded microphone cable. If a very much longer wire than this is required, special low-capacity cable may be needed or resort may be had to a cathode-follower output stage at the preamplifier.

Commercial Preamp-Equalizers

Manufacturers of audio equipment, designed for high fidelity reproduction, have developed a combination preampli-

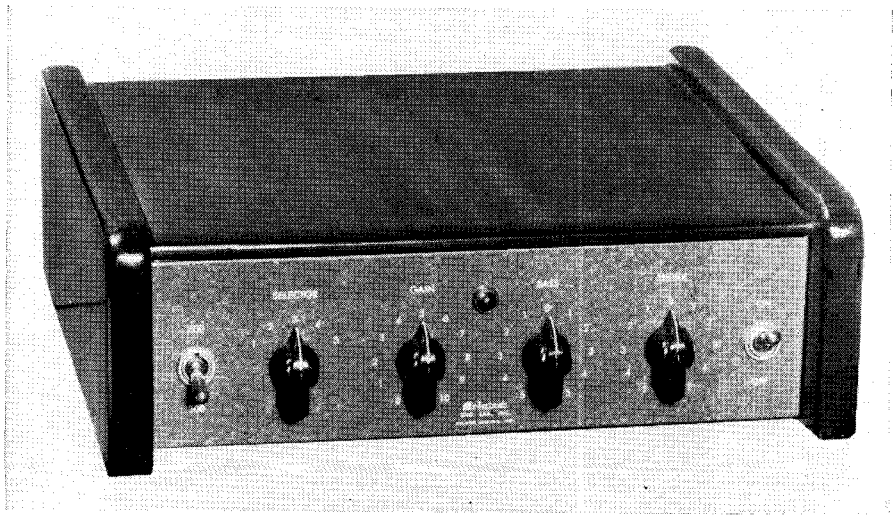

Fig. 20-7. McIntosh AE-2 amplifier equalizer control. (Courtesy McIntosh Engineering)

fier and equalizer which meets the exacting requirements for proper matching and compensation of modern phono cartridges. The circuitry is interesting for the engineer or novice experimenting with audio equipment. The following data shows several versions of accomplishing proper correction to precede conventional equalizers.

The Model AE-2 Amplifier Equalizer Control, Fig. 20-7, is intended to provide an adequate amount of amplification between five different program sources and a *McIntosh* 50 or 20 watt power amplifier. (See Chapter 21.) The various program circuits may be selected by means of a front panel control labeled "Selector." Reference to the schematic diagram shown in Fig. 20-8 will be of assistance in following the description. Circuits 1 and 2 receive 50 decibels of amplification which is constant from 20 cycles to 20 kilocycles. Circuits 3 and 4 receive 50 decibels of amplification which is constant from one kilocycle to 20 kilocycles but increases below 600 or 300 cycles to compensate for the 6 decibel per octave recording characteristic. Turnover selected by switch on panel. Circuit number 5 receives 80 decibels of amplification which is constant with respect to frequency. The amplification of all five circuits may be controlled by a front panel adjustment labeled "Gain."

In addition, all five circuits are subject to variable amounts of bass and treble boost, or bass or treble attenuation. The controls affecting a change of amplification with frequency are front panel adjustments labeled "Bass" and "Treble." These two controls are non-interacting and provide boost up to a maximum of 17 decibels, and attenuation to a maximum of 17 decibels. The action of these controls is best clarified by referring to Fig. 20-8 showing response curves.

Channels 1 and 2 are intended to be used between such program sources as crystal microphones or pick ups and FM-AM tuners or other commercial radio receivers. The program level of these devices may exceed the overload point for the input circuit of the Amplifier Equalizer Control, and therefore, a 100,000 ohm potentiometer (which is screwdriver adjusted at the back of the AE-2 chassis) may be used to reduce the program level in circuits 1 and 2 to a suitable value. When crystal microphones or pickups are to be plugged into channels 1 and 2, a one to five megohm resistor should be inserted in series with the crystal device. This resistor should be introduced at the phono pin jack so that the capacity of the connecting cable will not cause a loss of high frequency in such a large resistor as would be the case if it were introduced at the crystal device itself.

Circuit number 3 presents a 27,000 ohm load to a program source connected to it. This circuit should provide a flat response from the high impedance *Pickering* cartridge. Circuit number 4 presents a 12,000 ohm load to a program source connected to it. This circuit should provide a flat response from the *General Electric* variable reluctance cartridge.

Where circuits 3 and 4 must be used with magnetic cartridges of other manufacturers, the terminating resistances mentioned above may be removed and the optimum value resistance substituted.

Circuit number 5 provides 80 decibels of amplification and loads a program source with a one-half megohm resistance shunted by approximately 60 micromicrofarads. This circuit will provide adequate amplification from most high impedance magnetic microphones. When it is desired to use a low impedance low level magnetic microphone, a well shielded input transformer should be used between the microphone and the Amplifier Equalizer Control.

The variable bass and treble adjustments may be used to modify the frequency response of the AE-2 unit of each of the five program circuits. In the case of circuits 3 and 4, the 6 decibels per octave change in amplification below 300 or 600 cycles may be either increased to 12 decibels per octave or reduced almost to a constant amplification with respect to frequency. For most applications, the adjustment of these circuits will be

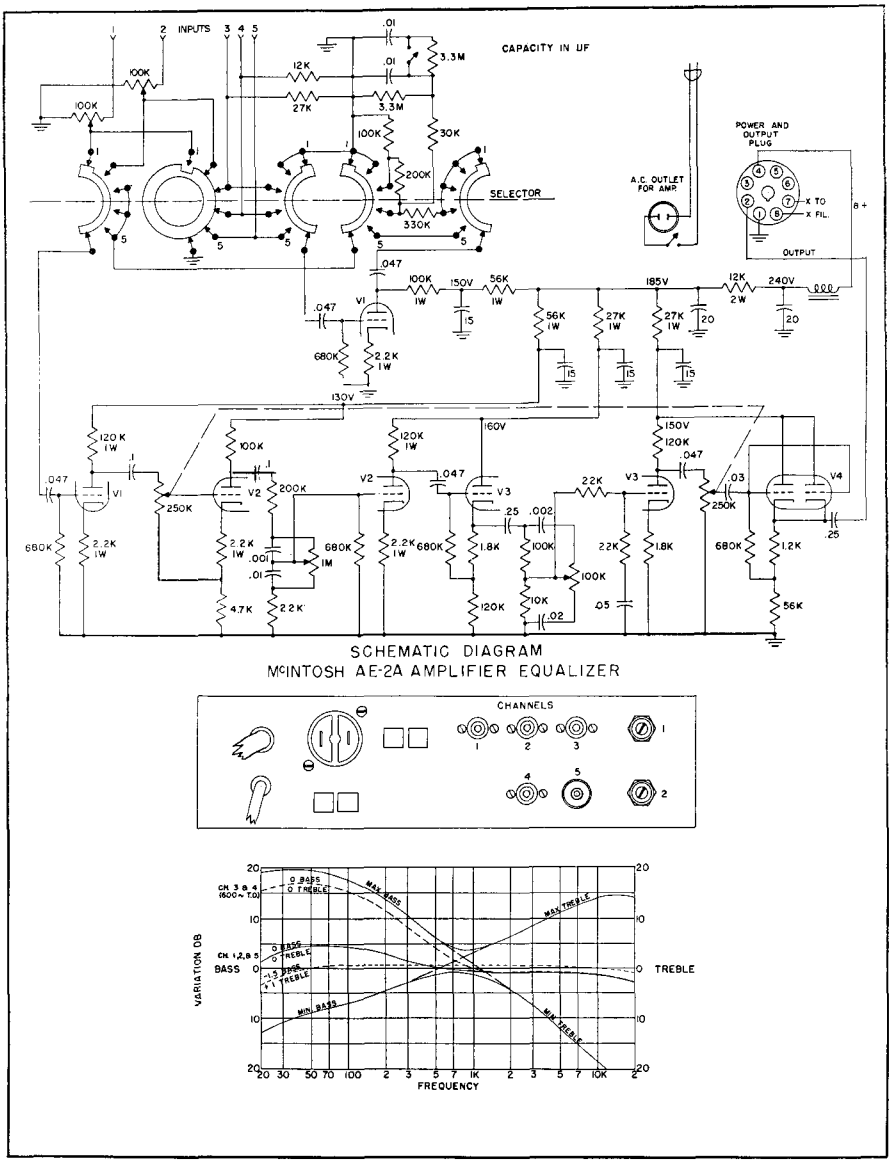

Fig. 20-8. Schematic diagram of the McIntosh AE-2A amplifier equalizer.

largely a matter of individual preference.

The output circuit of the Amplifier Equalizer Control consists of a parallel connected 12AX7 tube in a cathode follower circuit. It is well to realize that, although the equivalent generator resistance of the 12AX7 in this circuit is only 600 ohms, it is not possible to develop full signal voltage across an impedance less than 15,000 ohms. Therefore, the cable connecting the Amplifier Equalizer Control to the power amplifier should not present a capacitive reactance below this figure at 20,000 cycles. However, the use of greater amounts of capacitance will

not result in frequency discrimination if the output signal voltage is suitably reduced, but as implied, this condition will restrict maximum output voltage and in some cases, perhaps, to a value unsuitably low. 500 micro-microfarads is a reactance of approximately 16,000 ohms at 20,000 cycles. A cable having a capacity of 30 $\mu\mu$fd per foot may, therefore, be 16 feet long. A reduction in cable capacity per foot will, of course, permit the use of a correspondingly longer cable.

The combined hum and noise voltage of the AE-2 unit will reflect an equivalent input signal level of less than ten microvolts. This low value of noise voltage maintains a 50 decibel signal to noise ratio from a microphone level of —50 dbm without the use of an input transformer. An input transformer adequately shielded and providing a voltage gain of 20 decibels would permit the same signal to noise ratio from an input level of —70 dbm.

The Scott Dynaural Preamplifier

Recent improvements in recording have produced phonograph discs which rival the range of the human ear. All records, however, have a definite and generally annoying background noise which increases with wear and dust and detracts from the realism of the reproduced performance. With the new, fine-groove techniques the effects of both surface noise and turntable rumble have been aggravated. Also, the new wide-range magnetic pickups are characterized by a very low output level, thus requiring extra amplification or "preamplification."

In "Dynaural" reproduction,[10] the range of the system is constantly and automatically controlled by the music in accordance with the characteristics of the music and the ear so that excess noise, scratch, and rumble are suppressed with little noticeable change in tone quality. This control action is obtained by reactance tube "gate" circuits.[11]

By combining the functions of noise suppression and preamplification in a single integrated circuit, certain economies can be effected, and what is even more important, the over-all performance can be improved. Fig. 20-9 shows a typical circuit. The preamplifier stages are fairly conventional except for the low-frequency compensation. The 6SC7 tube was chosen because of its low hum level even when operated on ac. Since both halves of this tube have a common cathode, the only practical bias arrangement is the grid leak type.

In most "Dynaural" circuits, to obtain best operating impedances for the high frequency gate, an L-pad matches the input of the gate circuit to the preceding tube. This naturally introduces some loss. Similarly, bass boost circuits introduce loss depending upon how much the bass must be increased. In this circuit, by inserting the bass boost condensers directly in the impedance matching L-pad, both functions of impedance matching and bass compensation are accomplished with a single circuit with only a single loss.

At high frequencies, where low gate circuit impedance is important, the bass boost condensers have little effect. Consequently, this arrangement does not adversely affect suppressor performance. Similarly, the gate circuits present a comparatively high impedance at low frequencies and do not affect the bass boost. This design effectively eliminates one amplifying stage, and, at the same time, allows the bass compensation to operate at a relatively low impedance and high level—thus precluding difficulties with capacitance and hum pickup, if the leads are extended several feet for remote control of bass turnover.

[10]Scott, H. H.: "Dynaural Preamplifier Provides Wide Compensation," Radio and Television News, Jan., 1950, p. 56.

[11]Scott, H. H.: "Dynamic Suppression of Phonograph Record Noise," Electronics, Dec. 1946, pages 92-95. (Also 1946 edition of Proceedings of the National Electronics Conference.)

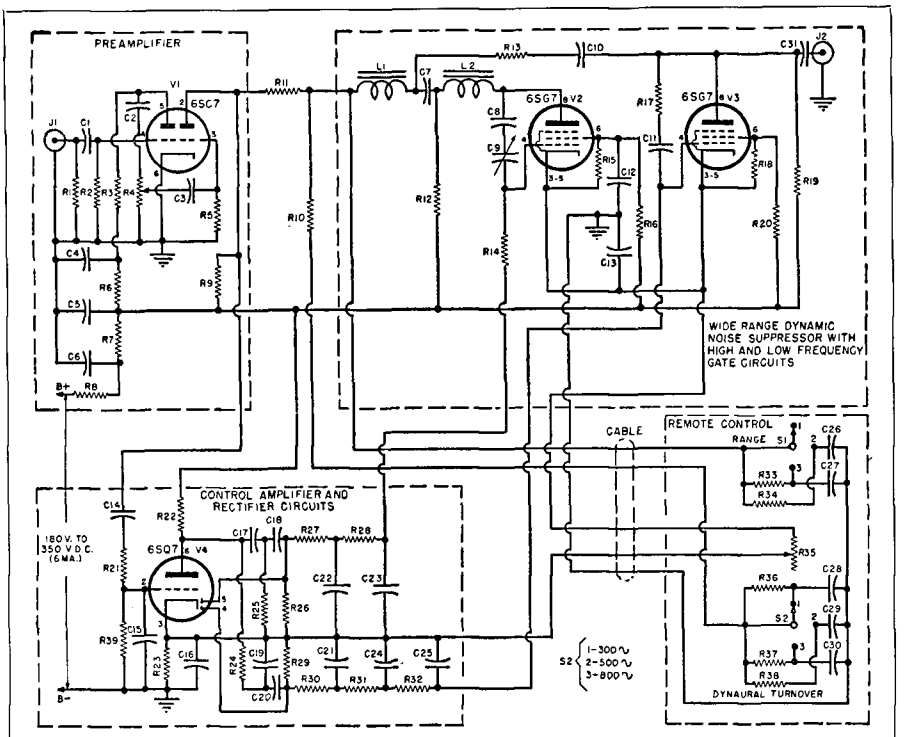

R_1, R_{13}—22,000 ohm, ½ w. res.
R_2—10 megohm, ½ w. res.
R_3, R_{12}, R_{14}—220,000 ohm, ½ w. res.
R_4—500,000 ohm pot (level control)
R_5—40 megohm, ½ w. res.
R_6—47,000 ohm, ½ w. res.
R_7, R_8—4700 ohm, ½ w. res.
R_9, R_{22}, R_{36}—100,000 ohm, ½ w. res.
R_{10}, R_{18}—15,000 ohm, ½ w. res.
R_{11}—200,000 ohm, ½ w. res.
R_{15}—27,000 ohm, ½ w. res.
R_{16}, R_{20}—100,000 ohm, 1 w. res.
R_{17}, R_{19}, R_{24}, R_{25}, R_{27}—470,000 ohm, ½ w. res.
R_{21}—1.3 megohm, ½ w. res.
R_{23}—330 ohm, ½ w. res.
R_{26}—4.7 megohm, ½ w. res.
R_{28}, R_{30}, R_{31}—1 megohm, ½ w. res.
R_{29}, R_{32}, R_{33}, R_{34}, R_{36}, R_{37}, R_{38}—2.2 megohm, ½ w. res.
R_{35}—3500 ohm reverse taper pot (Dynaural control)

C_1, C_{10}, C_{21}, C_{22}, C_{23}, C_{24}, C_{31}—.02 μfd., 400 v. cond.
C_2, C_{12}—.05 μfd., 400 v. cond.
C_3, C_{11}—.005 μfd., 400 v. cond.
C_4, C_5, C_6—8/8/8 μfd., 450 v. elec. cond.
C_7, C_{25}—.01 μfd., 400 v. cond.
C_8—.0025 μfd., 400 v. cond.
C_9—28-280 μμfd. var. cond.
C_{13}, C_{16}—20 μfd., 25 v. elec. cond.
C_{14}, C_{17}—240 μμfd. mica cond.
C_{15}—470 μμfd. mica cond.
C_{18}, C_{19}, C_{20}, C_{26}—.001 μfd. mica cond.
C_{27}—.0035 μfd. mica cond.
C_{28}—.04 μfd., 200 v. cond.
C_{29}—.024 μfd., 200 v. cond.
C_{30}—.015 μfd., 200 v. cond.
S_1, S_2—S.p. 3-pos. rotary sw.
L_1—1.3 hy. coil (H.H. Scott Type RL-1)
L_2—.4 hy. coil (H.H. Scott Type RL-2)
J_1, J_2—Open circuit jacks
V_1—6SC7 tube
V_2, V_3—6SG7 tube
V_4—6SQ7 tube

Fig. 20-9. Schematic shows how the "Dynaural" preamplifier and noise suppressor are combined in a single assembly. Connections for remote control are also indicated.

Turnover Control

The low frequencies in records are attenuated generally at an average rate of 6 db. per octave below some frequency known as the "turnover" point as shown in Fig. 20-10. In the early "electrical" recordings the turnover frequency was generally at approximately 250 or 300 cycles per second. Many commercial recordings still have the turnover at this frequency. However, as the recording art progressed there was a tendency to record at louder levels to override noise. Consequently, to avoid overcutting on the bass, the turnover point was raised progressively to as high as 800 or 1000

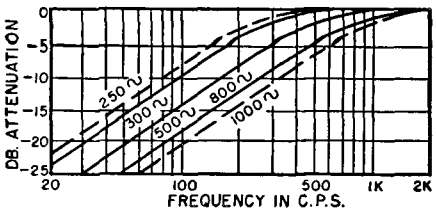

Fig. 20-10. Typical low frequency attenuation for various turnover frequencies as used in recording different phonograph discs.

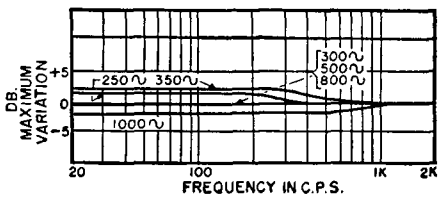

Fig. 20-12. Max. error in l.f. response resulting from use of 300-, 500-, and 800-cycle equalization for 250-1000 turnover points.

cycles by some companies while the NARTB standardized on 500 cycles for transcriptions.

To reproduce all recordings properly with natural bass some adjustment must be possible in the reproducing equipment to shift the effective turnover point below which the bass must be boosted as shown in Fig. 20-11. If Figs. 20-10 and 20-11 are added together for any particular turnover point, the over-all response is obviously flat.

Since most recording characteristics have had average turnovers around 300, 500 and 800 cycles, these values were chosen for the "Dynaural" preamplifier. This further allows all recording bass turnovers, from below 250 to over 1000 cycles, to be matched within about 2 db which is a generally unnoticeable difference in sound reproduction. Fig. 20-12 shows the maximum error in frequency response for various recording turnovers between 250 and 1000 cycles.

The Gate Circuits

The "Dynaural" gate circuits are the latest wide-range type. To provide extended range and also remote control, the circuits operate at a lower impedance than earlier models. This allows the

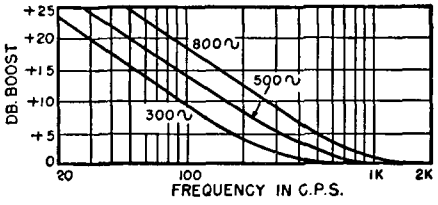

Fig. 20-11. Theoretical bass compensation required to equalize for 300-, 500-, and 800-cycle turnover frequencies on recordings.

range, as well as the suppression, to be controlled remotely without difficulty due to cable capacitance or hum pickup.

The first 6SG7 tube acts as a variable capacitive reactance, thus controlling the upper limit of the range. The second simulates a variable inductive reactance, controlling the lower limit. Separate control circuits bias the grids of these tubes in accordance with the signal, thus providing automatic and substantially instantaneous dynamic bandpass action.

The coils are *H. H. Scott* types RL-1 and RL-2 rated at 1.3 and 0.4 henrys. These coils are designed for the correct "Q" over the entire frequency range and use of other types may result in inefficient gate operation.

The "Dynaural" suppression control, as in all of the original Dynamic Noise Suppressors, operates in a dc circuit, the leads of which may be extended to any desired length. This control simultaneously adjusts the degree to which the gate circuits may close to decrease the noise bandwidth and the sensitivity of the control action. On reasonably good records this control need be turned only partly on, that is, it should not be operated too close to 0 ohms.

The factory adjustment of a Dynamic Noise Suppressor is rather complex and involves considerable laboratory equipment. Where factory adjustment is impossible, however, the following procedure will suffice. The trimmer (C_6) in the grid circuit of the first 6SG7 determines the maximum suppression. With the control (R_{35}) set to 0 ohms and the grid of the 6SQ7 grounded, this trimmer should be set for maximum noise reduction without regard to quality. The ground

Fig. 20-13. The Scott Model 112-A Dynaural Converter. (Courtesy Herman Hosmer Scott, Inc.)

should be removed from the grid of the 6SQ7 and the "Dynaural" control (R_{35}) set at some intermediate position, such as 400 ohms. The *level* control (R_4) is normally left fixed and compensates for the sensitivity of different pickups. If the control is set too high the gate circuits may be heard opening on loud passages. If it is set too low the gate circuits will not open enough and a "dead" quality will result. The best setting is that at which all types of records can be played satisfactorily by merely readjusting the "Dynaural" control setting and, if necessary, reducing the setting of the *range* control (S_1) when the signal is distorted. It is obviously useless to attempt to reproduce frequencies above the range that is present on the records cleanly and without distortion.

The "Dynaural" preamplifier (Fig. 20-13) is equipped with a range control (S_1) providing three positions, one wide open for the best recordings, another slightly restricted for average recordings and the third with a suitable restriction for early recordings. This allows elimination of "rattles" and other distortion without sacrificing any of the usable range. Because of the relatively low impedance of the circuit this range control is mounted on a cable for remote control. The load resistance on the phonograph pickup should be in accordance with the manufacturers' specifications for correct high-frequency response.

CONSTANT-AMPLITUDE PICKUP COMPENSATION

The "New" strain-sensitive type phonograph (Chapter 9) pickup made by the *Pfanstiehl Chemical Company* is a constant-amplitude type transducer, the signal being developed by the damped bending of a polystyrene cantilever beam element, on which is deposited a layer of strain-sensitive carbon.[12] The result is a linear transducer which has an integrated output of about 15 millivolts from test records. The response extends to zero frequency, and can be extended to 20,000 cps, or higher, if necessary, for special purposes. The performance of the pickup compares favorably with the magnetic pickup. Such a pickup requires correct and flexible compensation.

[12]John, R. S., "A Strain-Sensitive Phono Pickup," Radio and Television News, Feb., 1950.

The requirements of the preamplifier are twofold.[13] It must compensate the signal from the pickup so that a flat signal is presented to the amplifier. This requires that various compensation patterns be available for correcting the various types of recording curves used. Any *additional* tone control may be accomplished by the tone controls on the amplifier, designed for the purpose of producing patterns pleasing to the particular ear, but not necessarily meant for accurate compensation of recording characteristics. The preamplifier must also bring the signal level up to a sufficient value to be able to drive the amplifier to its full output.

We will assume that the pickup is a perfect constant-amplitude type transducer. Actually, this is almost exactly true of these units, within the limits of accuracy of measurement of pickup response. All of the graphs have therefore been drawn on an amplitude basis, and thus are somewhat different from the more familiar constant-velocity type curves. The resistance of these pickups is about 250,000 ohms. This is bypassed by 0.5 μfd and thus the equivalent resistance to ground from the center of the pickup is 62.5k. We will ignore the effect of the coupling capacitors throughout the calculations for simplicity.

Following standard practice, dimensionless quantities will be used to represent resistance and capacitance. For capacitance, for example, we make the substitution $X_c = tR$, where t is a function of frequency, or $t = f_c/f$, where $t = 1$ at the turnover frequency, f_c. For resistance, we make substitutions such as $R_x = bR$, where b is a constant number, and R is a constant arbitrary value of resistance, chosen for convenience or simplicity, and having the same value as in the substitution for capacitance. In these calculations, we have chosen $R = 270{,}000$ ohms.

[13]John, Robt. S. Jr., "Constant-Amplitude Pickup Compensation." Radio-Electronic Engineering edition of Radio and Television News, April, 1951.

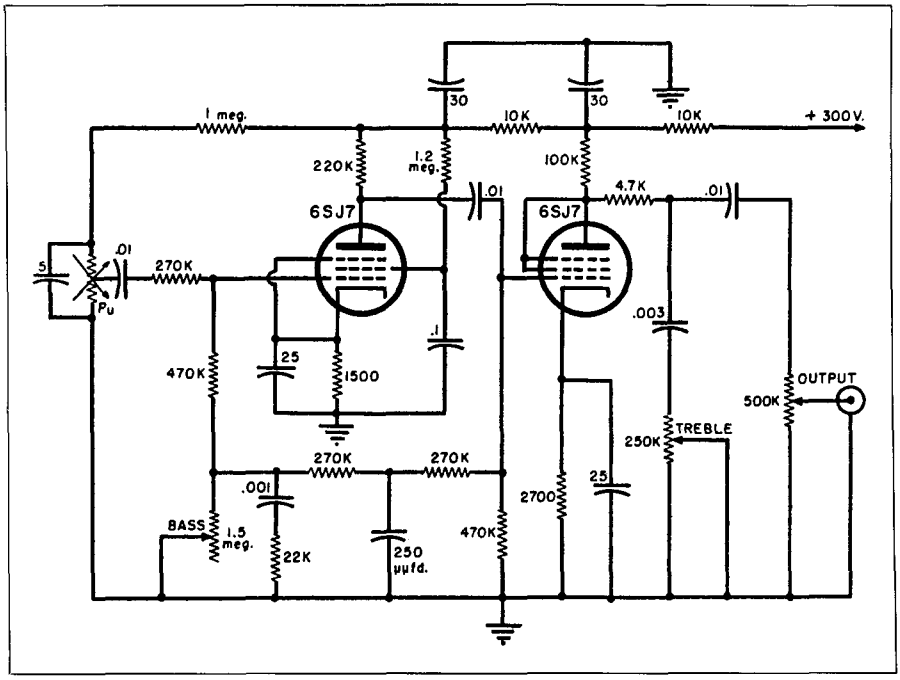

Fig. 20-14. Circuit diagram of the preamplifier.

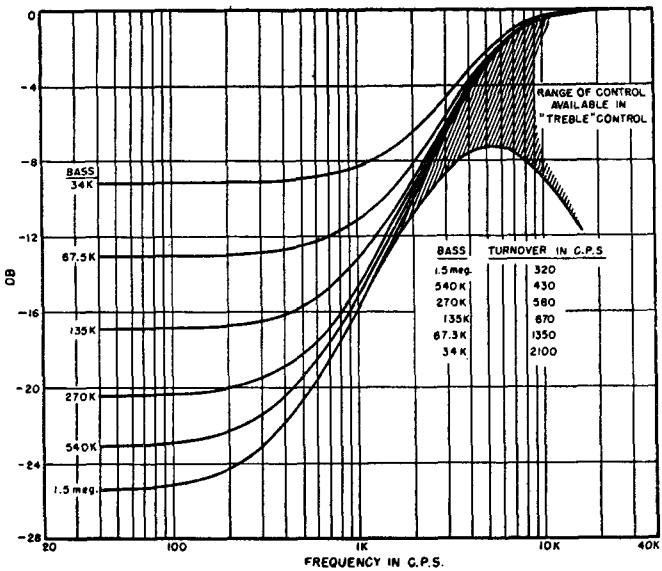

Fig. 20-15. Response curves for the original preamplifier circuit used previously and which is shown in schematic form in Fig. 20-14. The bass turnover frequencies and treble range are indicated.

As a preliminary the 3PPRC or 2PRC circuit was analyzed. The complete circuit is given in Fig. 20-14. This is the circuit presently on the market, designed for this pickup. The calculated partial response curves (bass control only) are given in Fig. 20-15. The treble control of this circuit is a simple attenuating network, with a maximum of 10 db of treble loss at 10,000 cps, centered about an upper turnover frequency of about 4000 cps. Curves for this control are not plotted but the region of operation is indicated. This circuit obtains the required compensation by means of selective feedback from plate-to-grid in the first stage only. The present analysis will only improve upon this particular type of circuit. The configuration remains the best found to date.

It is evident that in order to compensate a constant-velocity characteristic in the recording, a treble *boost* of 6 db per octave above turnover is required. Below the turnover, no compensation is required. Other types of recording patterns in use require less compensation, due to the varying amounts of pre-emphasis employed. For NATRB characteristics, only about 10 db total compensation is required, if we ignore the bass boost in LP records, for the moment. In this preamplifier there will always be less feedback required in the treble than in the bass. However, the feedback is still beneficial in providing simple, effective control, and also in allowing clean, stable amplification of the signal. With regard to quietness, both direct-coupling between stages and plate-to-cathode feedback were tried but discarded in favor of plate-to-grid feedback. With this method, the cathode of the first stage, particularly, can be at very low impedance to ground, thus reducing hum and noise. The extra phase shifts involved in feeding back over two or more stages are also avoided.

The response curves given in Fig. 20-15, as modified by the treble control, are to be compared with the asymptotes of the "Best Available Estimates of Current Recording Characteristics," from data reported by St. George and Drisko in *Audio Engineering* of March 1949 (see Fig. 20-16). It should be noted that as the feedback is varied in the bass, the lower turnover frequency changes si-

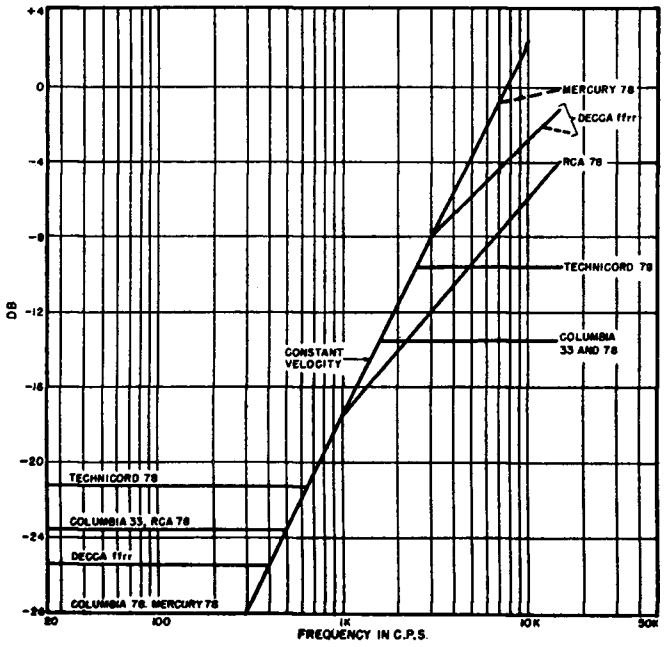

Fig. 20-16. Compensation required for matching best available estimates of current recording characteristics for ideal constant-amplitude type of transducer (asymptotes only).

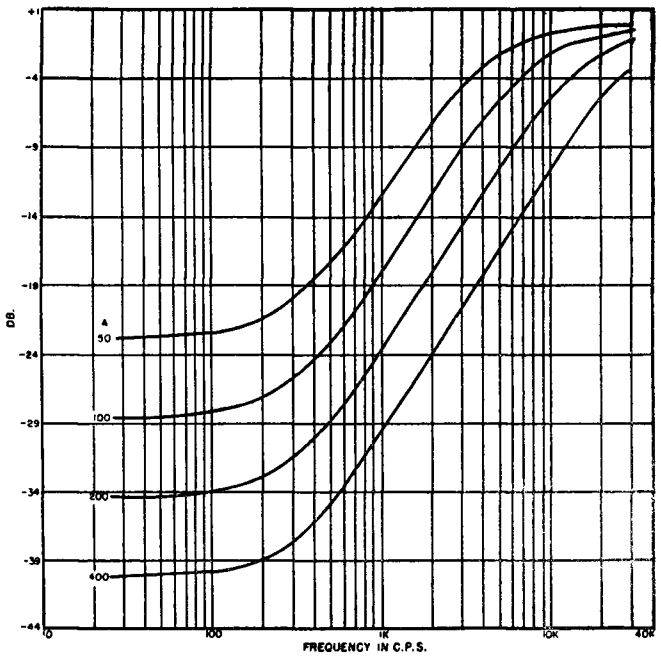

Fig. 20-17. Effect on turnover frequencies of various values of gain-without-feedback (A) of pentode. Lower turnover is 300 cps; upper turnovers are 3900, 7800, 15,600 and 31,200 cps.

multaneously. The high frequency turnover, however, remains constant. This is not the most desirable combination. Both turnovers should be controlled, but the upper turnover requires more variation than the lower, as can be seen from Fig. 20-16. Second, the apparent volume of microgroove records is greater than for constant-velocity with this circuit since the amount of feedback is reduced in correcting for the NARTB pattern. There is almost no feedback in the treble for any correction pattern, and thus the treble response in the pentode stage must be carefully controlled by proper design in order to avoid drooping. Further, the phase-shift in the two-section feedback network increases above 90° at high frequencies. It would only approach 90° as a limit in a single section network. If the 22,000 ohm resistor were omitted from the feedback network, the circuit would be unstable, and would oscillate.

The lowest available turnover is about 320 cps for the capacitance values shown. It can be seen that the form of the curves is such that most of the characteristics could be matched quite well, separately, with the aid of the treble control. For the constant velocity pattern, and with the 320 cps lowest turnover, there would be a treble rolloff near 7000 cps which could not be corrected in the single 6SJ7 stage with its gain of about 100. Since most modern recording is done using some pre-emphasis, and since older records usually have little musical content above these frequencies, this condition is probably acceptable without modification. If it is not, it can be corrected by the use of a higher gain pentode, as explained below.

The extent of the control is limited only by the gain-without-feedback of the first stage. It is for this reason that pentodes are used here. The higher the gain-without-feedback, the more effectively can constant-velocity characteristics be compensated. In Fig. 20-17, is calculated the effect of using tubes with various gain values, each curve being given for the same feedback component values in a typical single-section feedback network circuit. As shown, doubling the gain does not affect the bass turnover, but raises the upper turnover by one octave. Variation of the feedback resistors has a similar effect. It would appear from the figure that in order to obtain a bass turnover of 300 cps and still extend the control to 10,000 cps for constant velocity, one should use a higher gain tube than the 6SJ7, in order to have enough total compensation available. For this reason, the 6AU6 or the 6SH7 is used in the first stage in the following circuits (the miniature tube is to be preferred). The resulting circuits then give effective variable compensation over the slightly more than five octaves, as required.

In the improved circuit, given in Fig. 20-18, treble compensation is based on a variable resistance in the capacitive branch of the feedback network while bass control is based on the same component as before. All of the required compensation is thus accomplished by feedback; furthermore, only the one feedback network is needed. In this respect, compensation is easier here than for constant-velocity transducers. The control is needed in the middle of the frequency range, rather than on either end of the range. The dimensionaless feedback network for this circuit is given in Fig. 20-19. Straightforward analysis shows that the relative response of this circuit at various frequencies is given by the equation:

$$|\ 1 + \beta A\ | = \sqrt{1 + \frac{(A + a)p}{f(a + b + p)}}\ \sqrt{\frac{\dfrac{A\ (a + p)}{f(a + b + p)} + 2\left\{e + \dfrac{l}{l^2 + t^2}\right\}}{e^2 + \dfrac{1 + 2\,le}{l^2 + t^2}}}.$$

$$\text{where } e = \frac{1}{m} + \frac{1}{f} + \frac{1}{a + b + p}$$

$$t = f_c/f$$

Here, variation of l controls the upper, and m the lower turnover. t is a variable depending on frequency. It is assumed

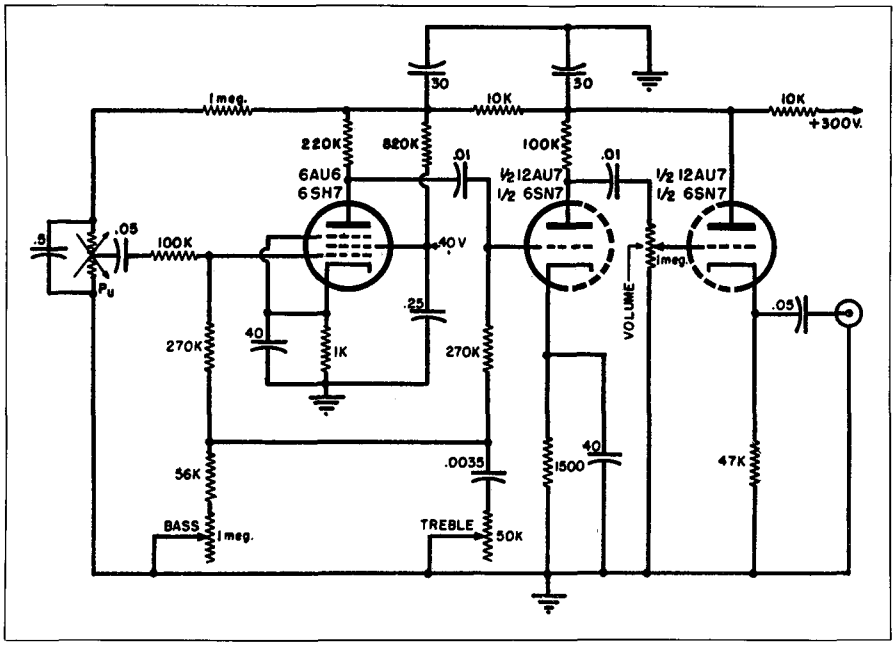

Fig. 20-18. Final circuit diagram of the improved preamplifier, model 2PRC-2.

for convenience that the gain-without-feedback, A, equals a constant value of 150. The calculated curves corresponding to various resistance values for the bass and treble controls are given in Fig. 20-20. There is continuous control of both turnovers, and at the same time, fewer components are utilized in the feedback network than before. One merely sets one potentiometer for each crossover, although a compromise pattern must still be used with the *RCA* and *Decca* types of curves. As seen from the curves, the controls actually affect each other somewhat. The effect on the lower turnover is quite slight, and both can easily be allowed for. About three octaves of turnover control are available in each control.

It can be seen that the single-section feedback network provides essentially as much action in correcting constant velocity as the two-section network of the first circuit. However, the phase shift limit here is always 90° or less, and the circuit is thus inherently more stable and free from possible transient distortion.

It should be noted that, as with the first circuit, the apparent volume changes as the bass control is varied. This will usually be no disadvantage. However, this effect could be eliminated by replacing the bass control with a fixed resistor, and including a multiposition switch to vary the capacitance in the feedback network, thus varying the lower turnover. The feedback in the bass would then be constant, and the treble varied for compensation. A four-position switch providing turnovers of, say, 300, 400, 500 and 800 cps should be sufficient.

These circuits in which plate-to-grid feedback is used have given better results than other types of circuits. However, the grid may be isolated by fairly high resistance, and hum and pickup problems may be encountered. These can be overcome by the use of a common ground bus, grounded at the input plug, and by keeping the resistance in the grid circuit as low as practical. Hum-balancing of the filament windings also sometimes helps. In the circuit of Fig. 20-18,

the grid resistance has been lowered, but there are some limiting factors involved in making this too low. By setting $l = 0$ (treble $= 0$), and considering the maximum feedback at zero frequency ($t = 00$), we can rearrange the equation for the response of the circuit, to find:

$$|1 + BA| = 1 + \cfrac{A}{1 + \cfrac{b + f\left(\cfrac{a + b + p}{m}\right) + f}{a + p}} \xrightarrow[m \to \infty]{} 1 + A\frac{a + p}{b + f}$$

where the symbols refer to components in Fig. 20-19. Here, p and A have fixed values, and neglecting m for the moment, we can find the effect of varying a, b and f. Less isolation of the grid, and also a more favorable voltage divider for the input signal, results from lowering a and raising b. However, the feedback then becomes less effective. We must thus be content to lower a somewhat, lowering f also to offset the effect of a lowered value of a. The values given were chosen in order that, for the gain assumed, about 30 db of compensation would be available for constant velocity correction, thus extending the control from 300 cps to about 10,000 cps. By sacrificing some of the treble control for constant velocity records, a lower value for a could be used, resulting in somewhat greater output and better signal-to-noise ratio. For the 6SH7 circuit, 24 db total control has been obtained with a reduced to zero, and 30 db with $aR = 100{,}000$ ohms. The pickup is loaded more at high frequencies by the capacitance in the feedback network for the lower values of a. The resulting preamplifier is, however, sufficiently quiet with the higher value given above.

One other factor should be mentioned. We have assumed, in calculating the curves, that the gain of the pentode is a constant, for convenience. The effective gain is reduced in the low frequencies, however, by the size of the coupling and bypass capacitors. These have been chosen such that the response begins to fall off at approximately 20 cps, thus aiding in reducing turntable rumble and flutter. At high frequencies, the gain is somewhat less due to the slightly decreased effective load impedance, brought about by the capacitance in the feedback network. The measured curves show that this effect amounts to one or two db, only; the effect has been minimized by keeping the plate resistor smaller than the feedback resistor. The effective generator impedance of the pentode plate must be added to the feedback resistor in calculating.

Nothing has been said as yet about calculating the value of capacitance to be used in obtaining a certain lower turnover. By inspection of the equation for the circuit, we can see that the relative response is up three db when:

$$\frac{1}{t} = \frac{1}{m} + \frac{1}{f} + \frac{1}{a + b + p}$$

where we have turned the treble control to zero ($l = 0$), to avoid considering its interaction. For the maximum value of m, we can calculate values for t, where $C = 1/t\omega_c R$. It is seen that no great ad-

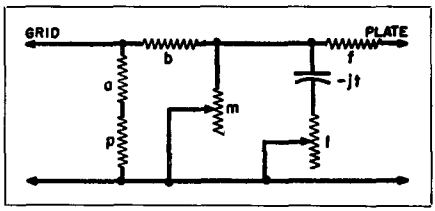

Fig. 20-19. Dimensionless feedback network for the improved circuit. m, l, and t are variables. R = 270 k., aR = 100 k., bR = 270 k., pR = 62.5 k., and fR = 270 k.

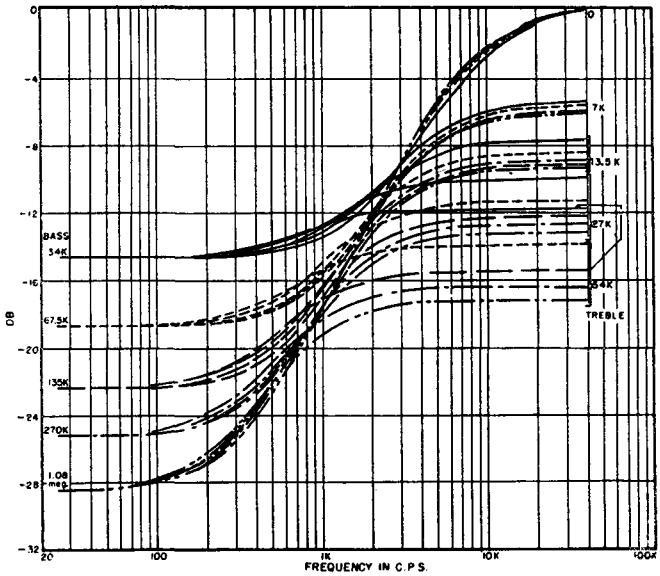

Fig. 20-20. Response curves for circuit of Fig. 20-18. Bass turnovers for indicated resistances are 300, 435, 600, 900 and 1450 cps. Treble turnovers are 8000, 4000, 2700-3300, 1800-2500 and 1100-1500 cps.

vantage is gained by having the bass potentiometer greater than about 1 megohm, and that as this is decreased, the turnover is increased. We can limit the uppermost value for the bass turnover by inserting a resistor in series with the bass potentiometer, and this is desirable also in limiting the otherwise excessive lift afforded in the bass. For the other values given, 56,000 ohms limits the uppermost turnover in the bass to about 1000 cps. To find the upper turnover the most easily, we set the reactance equal to the resistance of the treble potentiometer. This is somewhat affected, however, by the value of the bass potentiometer, as shown by the resulting curves of Fig. 20-20.

It might be desirable to compensate further the bass boost incorporated in some LP records. This can be done approximately by using a lower turnover in the bass control, or it can be done more exactly by including a dpst switch to cut in a smaller coupling capacitor between stages. This can be done best either in the input or output of the cathode follower stage, but should not be done in either the input or output of the first stage.

An attempt has been made only to analyze the circuit presently in use and circuits closely related to the tubes used, configuration of components, etc. Recommendations for substitutions in tube types have been included in Fig. 20-18. The 12AU7 dual triode shown gives about 2 volts output from test records, with the 6AU6. With some changes in the circuit to avoid driving the cathode follower beyond cut-off, a 12AX7 could be substituted in the last stages, to give 3 to 4 volts output. The standard size tubes which correspond to the above tubes are, respectively, the 6SN7, 6SH7, and 6SL7. The new circuit has been constructed and tested using all of these tube types, and gives completely satisfactory results both in the tangible and subjective respects. The measured response curves of these circuits agree with the calculated values in all respects except for the loading effects of the feedback capacitor and the effects of the coupling capacitors, as mentioned above. Fig. 20-21 gives a list of the settings

Record	*Bass*	*Treble*
Mercury 78	1 meg.	0
Decca ffrr 78	300k.	2k.
RCA 78	200k.	13k.
Columbia 78	1 meg.	30k.
Columbia 33⅓	200k.	30k.
Technicord	100k.	16k.

Fig. 20-21. Recommended settings for matching current recording characteristics with the improved preamplifier.

recommended for compensating the various characteristics of Fig. 20-16.

As a final touch to a circuit already giving excellent results, two components have been added to the unused section of the dual triode to make a cathode follower output stage. The preamplifier will thus satisfactorily drive any type of amplifier generally in use, and fairly long cables can be laid to a remote amplifier without attenuation of treble frequencies.

THE GOODELL PRA-1 PREAMPLIFIER DRIVER

This preamplifier driver is provided with sufficient input circuits on the selector switch to allow for all existing signal sources as well as those that may be developed in the future. Its control facilities permit unusual flexibility for producing optimum results under a wide variety of input and output conditions.

Five input jacks are provided. These are selected by the selector switch and may be equalized if desired with special circuits inserted between the jacks and the switch.

When a preamplifier is used for magnetic pickup cartridges it is plugged into the preamplifier socket and the lead from the pickup cartridge plugged directly into the preamplifier. This input will appear as one of the five inputs on the selector switch. See Fig. 20-22.

When a microphone preamplifier is used it is plugged into the preamplifier socket, the microphone lead is plugged directly into the preamplifier. This channel has a separate volume level control and may be mixed with any one of the other five channels.

A master volume control is provided. This controls the over-all input level from the two mixing controls.

In general it is desirable to operate the input level controls at half or three quarters of their maximum clockwise rotation and then control the loudness level with the master volume control. Obviously, if one of the input channels is not in use it is desirable to operate the associated control at zero level, maximum counter-clockwise to minimize noise from circuits not in use.

The output impedance of this preamplifier is a bridging 5000 ohm impedance unless a low line impedance is supplied on special order. The bridging impedance is sufficiently low so that it may be used to feed a relatively long line to the power amplifier, up to twenty feet or more without difficulty.

This preamplifier driver unit is capable of developing an output of ten volts across the bridging impedance. When operated with the *Goodell* AB-3 or ATB-3 power amplifiers it is required to develop only 3 volts of peak output voltage. Thus it is desirable to set the input control to the ATB-3 or AB-3 amplifier for maximum required power output when the input controls and master volume controls on the PRA-1 are set at approximately three quarters of their maximum clockwise rotation.

The tone controls are both eleven position tapped switches. The center position (position 6) is flat for both controls. One advantage of these tapped switch controls is that the center flat setting is easy to find and is absolutely flat. Rotation clockwise boosts the response in the treble or bass range while rotation counter clockwise attenuates the response in the corresponding frequency region. Another advantage of these controls is that any setting that has been found suitable for a particular type of signal may be repeated definitely and easily, where continuously variable controls are very dif-

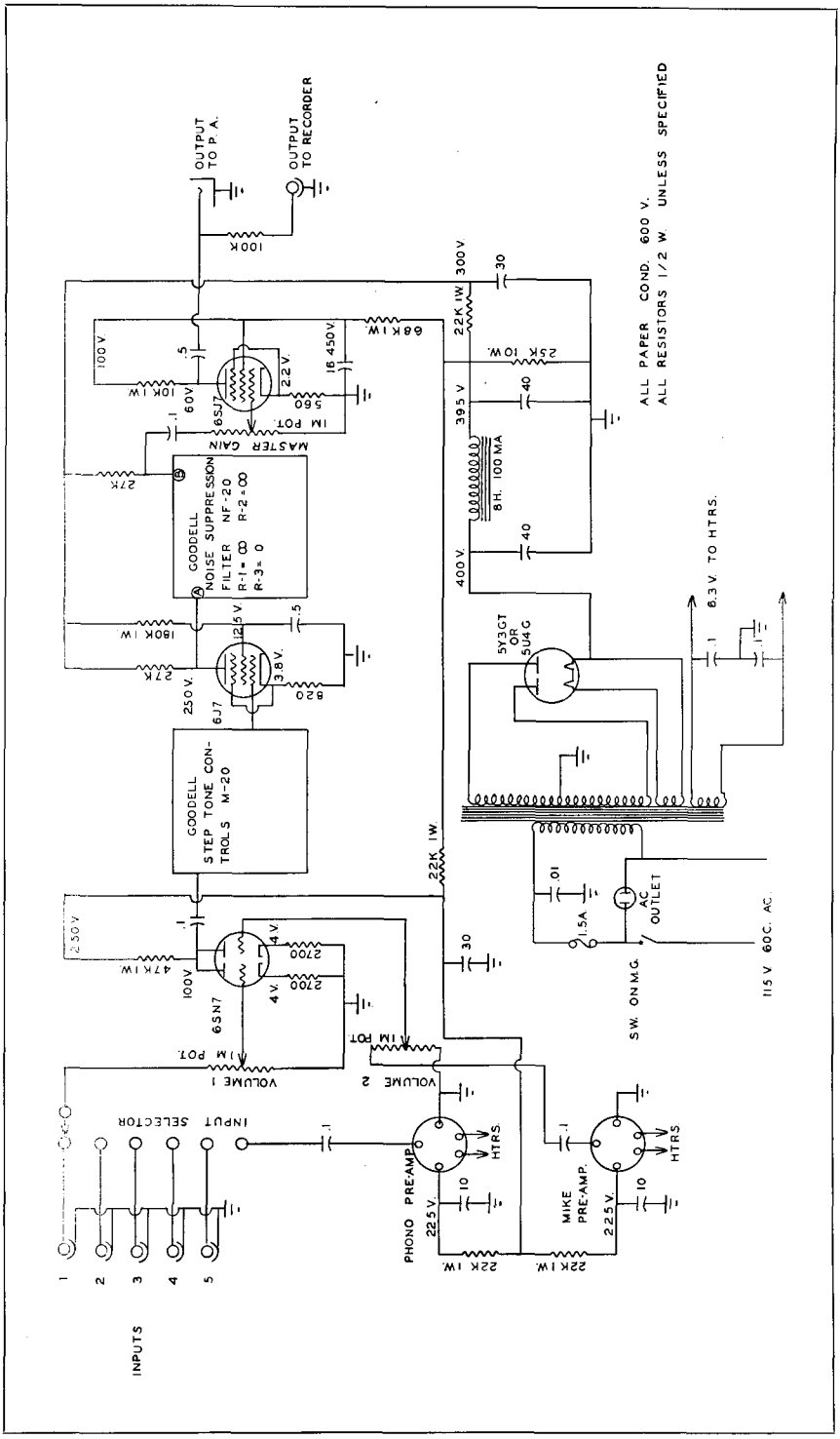

Fig. 20-22. Wiring diagram of the Goodell PRA-1 preamplifier, showing locations for adding the M-20 tone control and the NF-20 noise suppressor.

ficult to re-set with accuracy. It is also true that with these controls not only the amount of attenuation in the treble section but also the shape of the curve and the frequency at which attenuation starts is adjusted, while with the continuously variable controls this is not possible. The steps are discrete increments chosen so that each is just sufficient to provide appreciable change and the eleven available positions permit great flexibility.

The Range switch is designed to permit the user to choose a definite high frequency cut-off at any one of the several positions. When this control is in the extreme clockwise position (rotated all the way to the right) there is no suppression and the response is not limited by these circuits. Rotation counter clockwise produces a gradually lower high frequency cut-off with consequent attenuation of noise in the high frequency region.

The Suppression control is a vernier tuning control between the various positions of the Range switch. This is a continuously variable control that permits setting the cut-off frequency at any point between any two positions of the Range switch. Actually the vernier control overlaps the positions of the Range switch slightly to provide complete flexibility. When the Suppression control is full clockwise the highest frequency cut-off permitted by any given setting of the Range switch is obtained. When it is full counter clockwise the lowest cut-off possible in any given position of the Range switch is obtained.

Attenuation from this noise suppression circuit is at the rate of 20 decibels or more per octave so that high frequency noise may be dropped below audibility without any observable roll-off of the frequency range containing music signals. Where high frequency noise is very serious or distortion is present in the signal to an undesirable degree it may be desirable to operate these controls so as to actually cut-off the extreme upper portion of the signals. The range of control with regard to selection of the frequency at which high frequency cut-off begins is very broad, starting at approximately 3500 cycles per second and going up as high as 16,000 cycles per second.

Because there is no dynamic action associated with these circuits there is no danger of abrupt bursts of noise or "swish" with loud passages or sudden transients in the music signal. Setting of the controls is easily and quickly accomplished by ear for the most satisfactory results from any given signal source. Misadjustment of the controls will not produce distortion or abrupt changes in noise level. One of the features of this system is that even in the highly attenuated region down twenty decibels below the pass band the wave form is clean and undistorted.

CHAPTER 21

Music Systems

The development of high quality audio amplifiers and reproducers for home music systems or professional use.

● Audio equipment designed for quality phono reproduction has, in recent years, emerged as a "package." By separating the preamplifier-equalizer from the power stages, more flexible circuitry and mounting is achieved. With many very excellent amplifiers manufactured, and with constructional data found in monthly magazines, it is no easy task to select the "best" amplifier without first understanding the proper technique to use in judging the system.

AUDIO QUALITY

The proof of the pudding is in the eating and of a high quality sound system is in the listening. All authorities agree that in the final analysis it is the "subjective listening tests" which really tell the story. But how do you go about making such tests? What are the criteria for a *good* amplifier? In other words, you ask: "How do I know when I listen that my amplifier is as good as I hope it is? What do I use for test material? What are the characteristics of a good system? What do I listen for?"[1]

There is no necessary connection between perfect reproduction and fidelity and the adjectives "pleasant and mellow." Much of the confusion in the high-fidelity field results from a tendency on the part of those who have little or no experience with, or knowledge of, music to judge reproduction in terms of the question: Does it sound pleasant or not?

Good music is pleasant, more often than not, but it is not pleasant because the tone is entirely pleasant. There are many elements of great music, played magnificently, which are definitely on the unpleasant side from a tonal standpoint. On the other hand, it is very probable that the tone of a cheap table model radio, operating at low volume levels, with its limited frequency response, masked distortion, and mellow tone, is more pleasing to most ears than the Philharmonic Orchestra in person. In high-fidelity reproduction we are not trying to improve on the original material, but merely to recreate it with the greatest faithfulness. So let's start by forgetting those words "pleasant" and "mellow." They do not necessarily apply to high-fidelity reproduction: and, on the contrary, are often characteristic of systems of low fidelity.

That does not mean that high-fidelity reproduction must be unpleasant. It is true that too often in the past it has been highly unpleasant for the simple reason that inadequate systems have added more unpleasant elements to the original than the ear could tolerate. And this brings us to the first and one of the most important criteria of a great sound system: *The over-all effect must not be painful.*

[1]Marshall, J., "How to Judge Audio Quality." Radio & Television News, Nov. 1950, p. 44.

Great music well played, even the dissonant modern music, is not painful although it may be unpleasant at first hearing. It doesn't actually hurt the hearing. It doesn't actually hurt the ear, produce headaches, uneasiness and nervousness. Bad high-fidelity systems are very painful, *literally* painful. Listened to for long periods they do produce headaches and a squirmy unease, a firm desire to pull the switch and stop the noise.

The term "fatigue factor" is now finding its way into acoustic terminology and refers to this tendency of poor sound systems to cause pain and fatigue in listeners. Fatigue is caused principally by excessive distortion. The lower the distortion, the lower the fatigue factor. Therefore, for the most critical listening test of all, feed your sound system high-fidelity program material and keep it going, at a slightly higher than normal level, for stretches of 5 or even 10 hours, while you and your family go about your normal business.

If you and your family can stand listening to it many hours at a stretch without getting irritable or headachy, you are on the right track. But if the amplifier does make people irritable, or gives them headaches; if they ask after so long to have it shut off, the chances are that it isn't because they don't appreciate the finer things of life, but because your amplifier has too much distortion and too high a fatigue factor.

High Frequency Response

Curiously enough, one of the mistakes designers make when listening to their first high-fidelity amplifier, is to confuse distortion with high frequency response. When an amplifier and speaker begin to emit sounds of true high frequency and a lot of them, the constructor assumes he has achieved a great high frequency response. And so, to be sure, he has; for the distortion would not be so audible if the passband were narrow.

Actually the very fine high-fidelity system, at first hearing, appears to have less high frequency response than the poor system simply because it lacks distortion. And, lacking distortion, it actually has less high frequency amplitude in its output than the poor "high-fidelity" system.

It reproduces the very high frequency tones, but it reproduces them cleanly and without "fuzz" or stridency, and therefore seems somewhat lower in total tone. On the other hand, the high notes reproduced on a system with a high frequency cut-off, have a dull, lackluster timbre. On a low-fidelity system the triangle has a bell-like tone all right; but it is the tone of a bell which is damped by being held in the hand while struck. In a very fine system, the bell-like tone is clear and sharp, with an added brilliance, as if the bell were hanging on a non-resonant string. On a distorting amplifier, the bell-like tone has "spikes" all over it, as if the bell had been shattered by the blow and the sound of the breaking glass or metal added to the original tone.

Nowadays, with inexpensive audio generators and even more inexpensive test records, it is easy to make a frequency run on the reproducing system. Presuming such a run shows a smooth, nearly flat or absolutely flat response to 10,000 cycles and beyond, the next thing to do is to listen with the ear, while varying the volume upward, to see if the high frequencies are reproduced cleanly and without fuzz, stridency, or outright harshness. If, in addition to such cleanness, the system can be listened to for hours at a time without fatigue, you can assume you have a good high frequency response.

Voices are good tests of undistorted high frequency response. The sibilants, such as the "S's" and "Th's" and the "ce" in the word chance, should be heard plainly and cleanly. The intensity of these sibilants varies with individual voices but in the average voice is amazingly high. If the system has a good and undistorted high frequency response, the sibilants will be reproduced plainly, loudly, and very naturally.

If the system has low distortion, the "noises" accompanying music should be audible. In the Serkin recording of Bee-

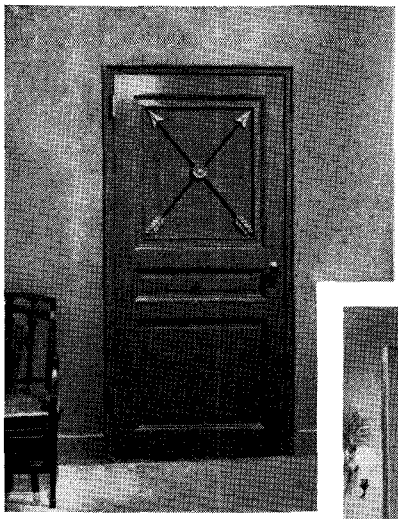

Left and below — Duplex speaker and other components installed on the back of a closet door.

(Courtesy Altec Lansing)

thoven's "Emperor Concerto," for instance (*Columbia* M-500) during the solo trills and runs in the treble, it is possible to hear the thumps as the keys hit bottom. These thumps are low frequency noises but they are masked if there is high frequency distortion and their audibility is, therefore, a good check test, for high frequency distortion. A drummer's percussion instruments and effects are good material for listening tests. Especially good are the Latin American bands with their castanets, brushed drums, and various odd percussion instruments. Most of these produce not musical tones but rhythmical noise; the better the high frequency response the clearer and more natural such noises. The recording of "Dry Bones" by Waring's "Pennsylvanians" has many odd sound effects in the "noise" category which make excellent test material.

But perhaps the best single test of undistorted high frequency response is a piece of very modern symphonic music with clever dissonances. Aaron Copeland's "El Salon Mexico" (*Victor* DM-546) is a wonderful example. The word "dissonance" is not quite accurate; it is because the passages in this work are not out and out dissonances that they make such fine test material. What Copeland does in this exciting music is not to produce out and out dissonances but rather to see how close he can come to outright dissonance without actually producing it. In several passages he gets right up to the edge of the cliff, but never quite goes over into dissonance.

If the recording, which by the way is excellent and of low inherent distortion, is played on a fine system, the effect will be that intended—the music is not only not unpleasant but amusing and stimu-

lating. A bad amplifier, on the other hand, will so change the harmonic structure that the passages do go over the cliff to become unpleasant dissonance.

Bass Response

The judging of bass response is more difficult than that of treble response. One trouble is that the ear possesses the very odd characteristic of imagining the existence of the fundamental even when it is not present, if the harmonics are strong. Even experienced and sensitive musicians are capable of being fooled by this illusion.

In general, as in the case of treble response, the fine system, at first hearing, appears to have less bass than the poor system, because it contributes less distortion and therefore has fewer harmonics of the fundamental. High frequency distortion is easily recognizable because it doesn't sound like music. But bass distortion may well sound like music to the unsophisticated ear.

Assume a bass viol playing a 60 cycle note and suppose the amplifier or speaker has strong second and third harmonic distortion. This means that it will add more 120 and 180 cycle components to those the instrument produces naturally. These harmonics sound like bass tones. Moreover, the peculiar quality of the ear mentioned before, gives the illusion that there is more fundamental, too. And all in all, it may well sound like a lot of bass and good bass too, to many ears—until a comparison is made with a genuine bass, and then the greater realism of the undistorted bass shows up.

Because the fine system has a wider response and less harmonic distortion, the fundamental will form a higher proportion of the total tone. So the bass will be duller, but more vibrant. In analogy, it will sound more like the sound produced by beating a rug, than that produced by beating a drum. If the fundamental is reproduced, the bass will sound "more like you could count the cycles per second," to quote a friend who was impressed upon first hearing a double bass viol in person. Moreover, there will be more vibration—sensible and "feelable" vibration of the air and surrounding solids. If you stand in front of a speaker system which is reproducing fundamental bass tones, you will feel your lungs vibrating even at low volume levels. The floor and walls of the room will also vibrate.

The better the bass response, the more the bass in music will "move." Most of the bass in modern music, both popular and classical, is contributed by the double-bass which has a range of many octaves. Unfortunately, the fact that speaker-enclosure systems are not merely reproducers of sound but generators as well, has often resulted in the double-bass appearing to be as stationary and as nearly "Johnny-One-Note" as the bass drum.

The explanation is very simple. Take a speaker-enclosure system with a marked resonant point around 100 cycles. That enclosure is a generator of 100 cycle tones and within certain limits it doesn't matter much whether it is stimulated or triggered by a 50 or a 100 cycle signal. It will still produce 100 cycle notes, just as a drum will produce the same note whether struck with a piece of wood or metal. So the bass will have a very high content of 100 cycle notes and will seem stationary even though the bass viol may be moving through the range of 50 to 200 cycles.

But if the resonant point of the speaker-enclosure system is lowered to below 50 cycles or eliminated entirely, it becomes much less a generator and much more a reproducer. So the bass of a bass viol will move up and down the scale and the "Johnny-One-Note" quality will be reduced or disappear entirely.

To summarize then, the bass response of a great reproducing system will (1) be apparently lower at first hearing than that of a poor system; (2) it will be duller and deeper in timbre because it will contain a higher proportion of the fundamental; (3) it will be more vibrant, or "more like you could count the cycles per second"; (4) it will produce more sensible and "feelable" vibra-

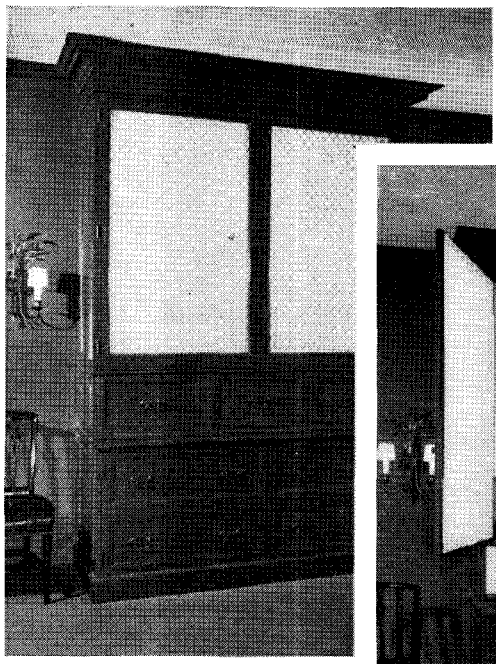

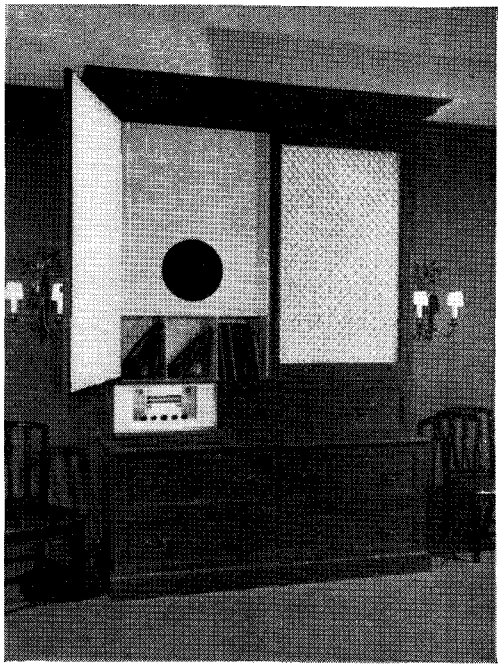

Above and right — installation in a bookcase. The record changer is in the drawer at right of the AM-FM radio tuner.

(Courtesy Altec Lansing)

tion of the air and solids; (5) it will "move" more and have less "Johnny-One-Note" quality.

Definition

A more characteristic quality of a fine reproducing system than the bass and treble responses—although related to both—is the quality called "definition." Audio definition can best be explained by an analogy with visual definition.

Photographers are very familiar with definition. It is perhaps the most important quality of a good camera or enlarger. A camera with good definition takes sharp, clear pictures, in which the details stand out. The individual blades of grass in a lawn, the individual hairs in a coiffure, stand out clearly and distinctly. A poor camera blurs the details.

Audio definition is exactly comparable. A system with good definition reveals the distinct, separate components of the total sound picture. Therefore, it is possible for the listener to pick out the individual instruments in an orchestra, even when they are playing the same note, and even in a loud passage or a crescendo. It will separate the individual voices in a quartet or choral group; the individual handclapping in applause; it will also show the separate components of a chord on a piano or violin.

Definition is a function of several amplifier qualities but largely of a transient response. If a camera is vibrated while an exposure is made, the resulting image will be blurred because the vibration has multiplied each line and image two or three times. Transient distortion of the type called "hangover" has a precisely comparable effect.

Take a run on the piano, played without depressing the loud pedal. From an

amplitude point of view the resulting sound pattern is a series of pulses with definite intervals between each pulse.

There are definite, discrete intervals between the separate pulses in which the amplitude is very small. But if the reproducing system is guilty of transient distortion, each note will be followed by one or more "echoes" which are generated by the reproducing system.

The separation between the pulses is greatly reduced and the pulses tend to blend into each other. This produces exactly the same type of audio blurring as vibration in a camera produces visual blurring. Such blurring greatly reduces the definition of the system.

Square-wave testing is perhaps the best objective measure of transient response and distortion, providing some means is used to include the speaker system. However, there are simple listening tests which give a good check for the presence of good transient response and the absence of "hangover."

The simplest is that of operating a switch whose noise is audible through the system—as, for instance, the "On-Off" switch of an associated tuner. The better the transient response the "Cleaner" the tone of the noise and the shorter the time it lasts. The "Cleanness" means that the thump is principally the fundamental without the addition of harmonic distortion; the short interval testifies to the lack of hangover echo.

An excellent and rigorous test is a high-speed c.w. signal tuned in *without* a beat frequency oscillator. The signal will be audible as a series of thumps. The better the transient response the more distinctly the thumps are separated. On a really high quality system, each of the thumps of a very high speed c.w. signal will be distinctly and sharply separated from the preceding and following pulses.

Piano recordings, or, better yet, an actual piano, are excellent tests of transient response. Indeed, all percussion instruments, if highly damped, are good. The kettle drums in the opening of Gershwin's "Concerto in F," for example, should be clean, sharp, and distinct. Plucked strings are very good. Look for separation of successive notes and pulses, a sharp rise and a quick decay in amplitude.

Naturalness

Naturalness is, of course, extremely important. The natural or distinctive tone of an instrument or voice is determined largely by the relation between the fundamental and the harmonics. Some of these relationships are amazing. In a typical male baritone voice, for instance, the sixth harmonic may be 10 times, or 20 db greater in amplitude than the *fundamental.* In a violin the amplitude of the harmonics decreases rapidly with the order; but in a clarinet, the amplitude of harmonics increases and the 10th or 12th harmonic may be many times louder than the second or fourth and as loud as, or louder than the fundamental.

It can readily be seen that both frequency distortion and harmonic distortion are capable of altering the harmonic structure so as to change the total character of the sound pattern and make a voice or instrument sound unnatural. Thus, if the baritone is boosted in the bass portion, the voice may be more pleasant, but it will no longer be natural, because the dominance of the harmonics has been destroyed. On the other hand, if the amplifier has great harmonic distortion, the harmonic dominance may be emphasized until it is not only unnatural but very unpleasant.

The only test for naturalness is a familiarity with the natural tone of the instrument or voice being reproduced. The simplest test is to use a good microphone and the voice of someone whose vocal mannerisms are completely familiar.

Presence

"Presence" is a relatively new term popular in advertisements of loudspeakers and amplifiers. Definitions and analysis may differ. Presumably the term refers to that quality which gives the

illusion that the listener is actually in the room in which the program is originating. Several factors combine to produce this quality. Naturalness, of course, is one of them. The audibility of various accompanying noises, such as breathing, is another. But the most important, perhaps, is the quality of room resonance.

There are always two rooms involved in the reproduction of recorded and radio sound—the room in which the program originates, and the one in which it is reproduced. It is the resonance of the original room, the studio, we are trying to reproduce. But since living rooms have acoustics which are very different from studios or concert halls, it is obviously a difficult thing to reproduce the room resonance of the original room or studio.

Moreover, the amount of room resonance present in a radio program or recording will vary widely. Up to a few years ago most radio and recording studios were very dead and the program incorporated very little resonance. Lately many radio programs and recordings contain a degree of room resonance. The degree of presence will, therefore, necessarily vary not only with the acoustics of the living room but also with the program material.

Under today's conditions it is probably best that the room in which modern musical radio programs and records are reproduced, should be slightly on the "dead" side. If the room is too "live," the room resonance it contributes may so modify the total effect as to reduce the illusion of presence.

Keeping these things in mind, the first thing we can say about testing or judging sound systems for presence, is that in a given room and with a given program source, the better the amplifier—in the respects already considered—the less the apparent or superficial room resonance.

Room resonance consists largely of the addition, to the original sound, of echoes reflected from walls and other objects. But echoes are also added by transient distortion or hangover. An amplifier with good definition has a good transient response and little or no hangover; therefore, it contributes little or no artificial resonance.

This does not mean it will have less presence. No real investigation has been made of all the ways in which room resonance is expressed in the total sound picture. Part of it consists of the echoes in the same frequency range as the original sound but with phase and amplitude differences. Part, however, consists of various combination and beat tones, especially of very low frequency, which would not be present if there were no reflected component. The more faithful the reproducing system, the more faithfully it will reproduce these complex patterns which account for the total room resonance and presence qualities. And even if there is less artificial resonance, the rendition of the resonance in the original program material is more faithful and natural.

Many of the *RCA* 45 rpm records and LP's have excellent innate room resonance and presence. The best example of recorded presence we know of, however, is the recording of "Greensleeves" with Dorothy Shay. Perhaps because it is recorded in a small studio, comparable in size to the average living room, the effect of presence on a good sound system is really remarkable. Those midnight pick-ups of bands from the local nightclubs are often excellent for checking or demonstrating presence.

Dynamic Range

A simple test for this is to use that Gershwin "Concerto" recording of the opening kettle drums. Raise the volume until the kettle drum bursts push the amplifier to nearly maximum output. Now listen for cleanness in reproduction, as compared with reproduction at low volume levels. Also for traces of echoes or hangover. If the system will reproduce those bursts cleanly, sharply and without generating echoes and bad distortion, it will easily meet the dynamic range problems of every day listening

To summarize then, in subjective tests of sound systems look for these factors:

Left—Duplex speaker installed in a false corner. Tuner, amplifier, and record changer are built into the end table next to an easy chair. (Courtesy Altec Lansing)

(1) Freedom from fatigue; (2) A clean, sharp, distortion-free high frequency response, without fuzz or harshness; (3) a natural bass in which the fundamental is dominant. Such a bass is duller than an artificial bass, more vibrant and will move more; (4) Good definition which is expressed by the distinctness with which the separate components of the sound pattern stand out from each other; (5) Naturalness of the instruments or voices; (6) Presence, or the illusion of being present in the room in which the program is originating. In a living room the illusion may be more like that of hearing the orchestra in the next room, or through a door; (7) The system should take peaks without breaking up and any distortion ought to be confined to the upper 3 or 4 db of the dynamic range.

Amplifiers for Home Music System

It would be most difficult to choose an amplifier from the many excellent products now available to the discriminating audio enthusiasts, music lover or professional engineer. The development of audio amplifier circuitry is best understood by using specific commercial designs for guidance. It is impossible to include but a very few of the many excellent amplifiers now available on the market—hence our discussion will include only a few representative units and their circuit features.

Some designs offer possibilities for

the custom builder. Others do not and should not be attempted.

The McIntosh Amplifier

The *McIntosh* 50W-2 Amplifier, Fig. 21-1 employs a completely new, patented, and unconventional circuit which permits reproduction of signals over the entire audio range and beyond.

It permits the use of pentodes at no disadvantage over triodes. It operates at almost the theoretical maximum efficiency for Class B amplifiers at full output and yet the distortion is below one percent at 50 watts with normal input supply voltage to the amplifier. The actual distortion figure requirement of every laboratory produced unit is approximately one-half of one percent or *less*.

This amplifier is designed to fully realize the maximum practical efficiency of the 6L6G tubes operating as pentodes and yet to be completely free of the usual distortions accompanying the use of pentode tubes in output circuits. Feedback is used to provide a very low internal generator impedance, being in the order of 100 ohms across the output tubes and providing a damping factor of 10 or more, which is the equivalent of saying that, looking back from any one of the output windings, the internal generator impedance is 0.1 of the impedance of that winding. For instance, the 8 ohm winding works from an 0.8 ohm generator. This provision reduces to a negligible amount the hang-over characteristics which are experienced in loud speakers when connected to amplifiers having relatively high internal generator impedances. The more efficient the speaker, the more effective is this damping effect.

The output circuit of the *McIntosh* amplifier is the first of its kind and provides 100% coupling between the two primary windings of the output transformer which is achieved by winding the two primary windings together as if they were one wire or bifilarly. In order to cancel the dc components through

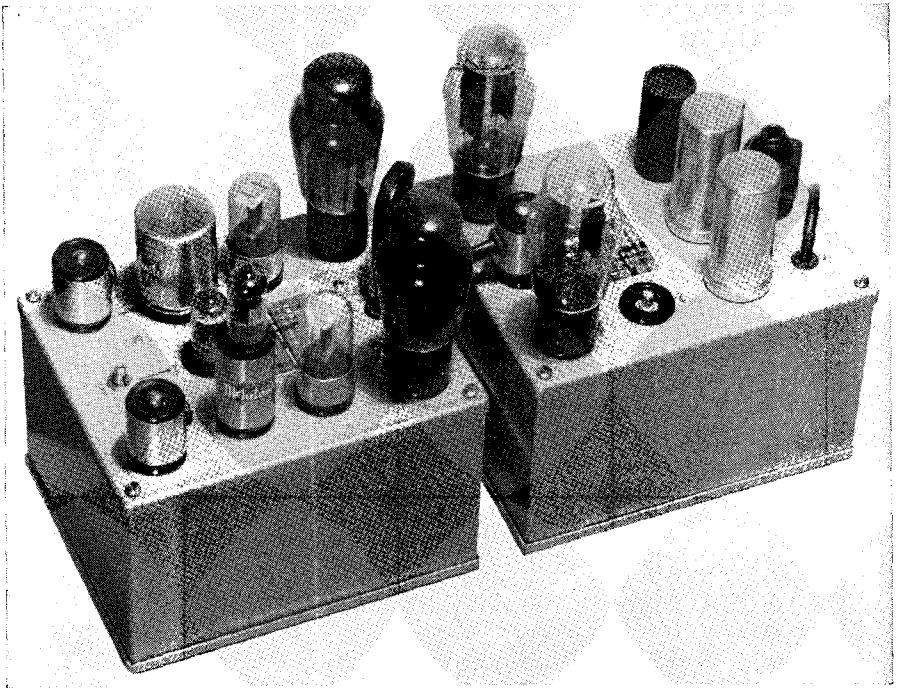

Fig. 21-1. The McIntosh 50W-2 amplifier for professional or home use. (Courtesy McIntosh)

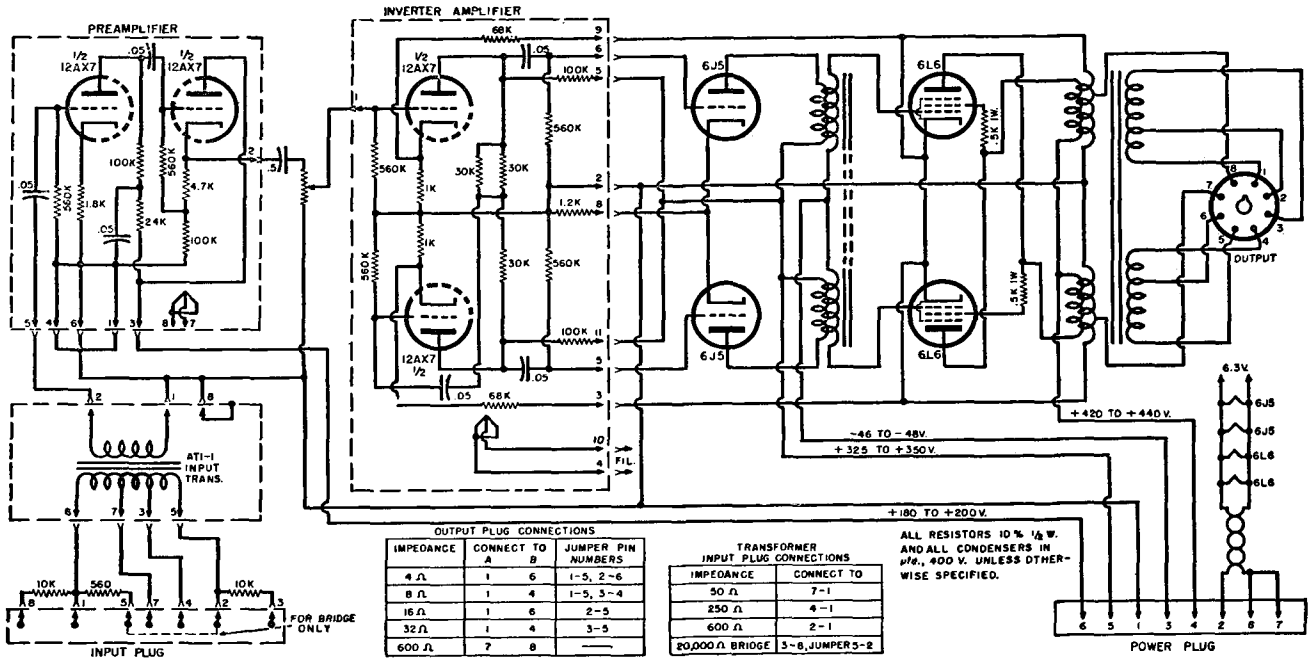

OUTPUT PLUG CONNECTIONS

IMPEDANCE	CONNECT TO A	CONNECT TO B	JUMPER PIN NUMBERS
4 Ω	1	6	1-5, 2-6
8 Ω	1	4	1-5, 3-4
16 Ω	1	6	2-5
32 Ω	1	4	3-5
600 Ω	7	8	—

TRANSFORMER INPUT PLUG CONNECTIONS

IMPEDANCE	CONNECT TO
50 Ω	7-1
250 Ω	4-1
600 Ω	2-1
20,000 Ω BRIDGE	3-8, JUMPER 3-2

ALL RESISTORS 10% 1/2 W. AND ALL CONDENSERS IN μfd., 400 V. UNLESS OTHERWISE SPECIFIED.

Fig. 21-2A. Schematic of the amplifier unit showing the close coupling employed in the output stage.

these windings, and, at the same time, arrange so that the AC components from the tubes add in-phase, the circuit as shown in Fig. 21-2A is used. This arrangement provides a "take-turn" primary for the operation of the output tubes in contrast to the conventional "push-pull" circuit where one-half of a series winding is used for one tube and the other half of the winding for the other tube. The *McIntosh* circuits, because of the high mutual coupling between the windings, from an AC standpoint utilize essentially the same coils. This circuit provides a 16 to 1 frequency response advantage over conventional output circuits for the following reason. The impedance between the two tubes has been reduced over the conventional circuit by a factor of 4 to 1 since the turns ratio is reduced by a factor of 2 to 1; a reduction of leakage inductance between primary and secondary of 4 to 1 is achieved because of the relative turns ratio reduction of 2 to 1. This accounts for the 16 to 1 advantage over the conventional "push-pull" circuit and is a major factor in achieving the wide band and low phase shift of the amplifier. It will be further observed that the load is ½ in the cathode and ½ in the plate for each of the tubes, which arrangement provides a feedback factor of approximately 12 db. The remaining feedback is obtained through a balanced loop to the input of the phase inverter.

Considerable care is given the problem of impulse distortion, and one of the basic reasons for using the bifilar choke input to the final stage, as indicated in the schematic, Fig. 21-2, is to provide a low grid circuit resistance path to dc which circumvents the usual difficulty of excessive bias resulting from transient or impulse program material.

The 50W-2 amplifier consists of two basic units. Each unit is 8¼ by 6¾ by 4¾ inches. To facilitate the electrical performance and to guard against variations of operation in different climates, the driver coil and output coil in the amplifier unit are potted in a case and the top of this case serves the double function of being the enclosure for the transformers and the chassis of the amplifier itself. Similarly, the power unit (Fig. 21-2B) includes a potted power transformer and a choke coil, the top of which is likewise the chassis for the power supply unit. The top of both the amplifier and power supply units include various sockets which are used for tubes, inverter amplifier, preamplifiers, input transformers, bias units, time delay relay, and filter condensers.

This "plug-in" design has a double function. The units themselves are logical sections of the overall circuit which are made separately to facilitate maintenance and replacement and to insure the positioning of the various components so that the performance of the amplifier will be uniform from unit to unit. There are many electrical reasons for following this procedure and it affords the additional desirable feature of making

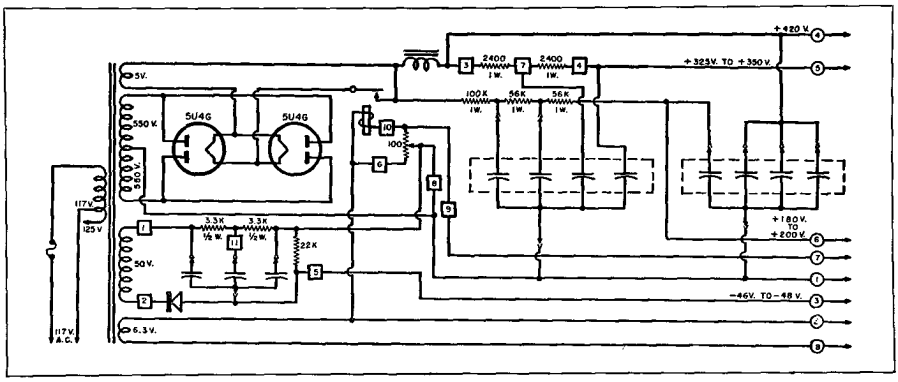

Fig. 21-2B. The power supply unit, including time delay relay, for use with the 50W-2 amplifier unit.

maintenance a matter of seconds rather than minutes or hours. Several sockets are provided to permit the use of a preamplifier and an input transformer and these sockets are so arranged that either the preamp or transformer (or both) can be used in the amplifier arrangement.

Electrical Design

Referring to the schematic diagram, Fig. 21-2, it is evident that the circuit consists of two 6L6 (or 1614) tubes in the final stage, driven by two 6J5 tubes operated in push pull and one 12AX7 tube consisting of two triodes for the inverter amplifier stage. This is the basic amplifier and has a gain of 40 db requiring a maximum of two volts input at the grid of the phase inverter.

A volume control is mounted in the chassis top to permit a screw driver adjustment of the operating level.

A preamplifier permits, by merely plugging in, an additional gain of 30 db. This preamp provides for a cathode loaded output as shown in Fig. 21-2. When a preamplifier is used the input plug is inserted in the "trans" socket (instead of the preamp position when a preamp is not used). The addition of the input transformer is possible, either the low impedance or bridging type. The gain through the transformer is 26 db for the 30-50 ohm winding; 17 db through the 250 ohm winding; and 12 db through the 600 ohm winding. Approximately 2 db gain is realized through the bridging coil. These coils are available in double and triple shielding, the double shielding being the most common, which provides 80 db of isolation to noise while the triple shielding unit provides 90 db isolation to noise.

As will be seen on the schematic diagram, the bias control unit, the delay relay, and the input plug to the amplifier unit are series connected to prevent the application of high voltage unless all of these are properly plugged in.

The bias control unit has a knob on top which is a filament ground centering potentiometer. It is used to reduce noise when the preamplifier is in circuit.

Specifications

Power Supply: 117 or 125 volts at 60 cycles.

Power Consumption: 180 watts at full output—100 watts (zero signal).

Frequency Range: 20 to 20,000 ±.2 db; 10 to 200,000 ± 6 db.

Power Output: 50 watts continuous—peak 100 watts.

Distortion: less than 1% at full output 20 to 20,000 cycles.

Gain: Minimum, 40 db; maximum, 95 db. (This gain available with preamp and transformer.)

Input Impedance: 100,000 ohms; with input transformer, 30, 250, or 600 ohms or bridging. (20,000 ohms.)

Output Impedance: 4, 8, 16, 32 or 600 ohms.

Efficiency: 60% at 50 watts; 67% at 60 watts.

Noise Level: 90 db below rated output; 80 db with preamp.

Intermodulation Distortion RMS: 1% or less if peak power is below 100 watts.

Damping Factor: 10 (looking back from the load, the impedance is 1/10th of load).

Impulse Distortion: negligible.

Tube Complement: Two 6L6G or 1614, two 6J5, two 5U4G, one 12AX7, one 6NO30 (one 12AX7 if preamp is used).

Weight: Complete with relay rack panel and mounting—60 lbs.

Size: Each unit—8¼" x 6¾" x 4¾"—mount on 7" x 19" relay rack panel.

The "Williamson" Amplifier

The *Williamson* amplifier circuit[2] originated in England by *D. T. N. Williamson* has attracted world-wide attention from high fidelity enthusiasts because of the quality of the reproduced output. There are many features in the amplifier that make it an attractive construc-

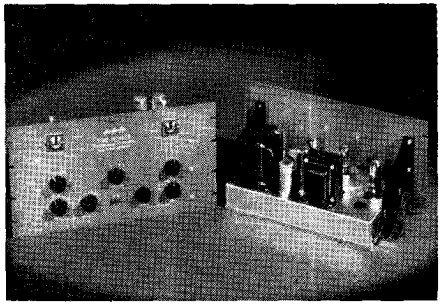

Dynamic Noise Suppressor Amplifier Model SA-1.

tion project. Within its power rating of 10 watts at less than 1% intermodulation, the amplifier proves to be ideal for home and small auditorium installations.

The performance of the amplifier, based on listening tests, can best be described as containing the elusive "presence effect," a quality inherent in low distortion equipment with the flat frequency response and low phase shift that enables speech and musical transients to be correctly reproduced. The bass response is solid and free from harmonic distortion. Highs are clean and crisp with none of the shrillness so often experienced with many amplifiers.

Since a number of the components specified in the original design are of English manufacture, considerable effort was made to choose substitute parts that would permit the same high degree of performance attributed to its prototype.[3]

The circuit diagram of the amplifier is shown in Fig. 21-3. The circuit contains four resistance-coupled stages and is operated with 20 decibels of voltage feedback taken from the secondary of the output transformer and carried around the complete amplifier. Medium mu triode tubes are used throughout and are biased to operate with minimum distortion. A noteworthy feature of the amplifier lies in the selection of the type of output tube. This is a power tetrode which is connected in the circuit to function as a medium mu power triode. The driving voltage required is much smaller than the more conventional 2A3 or 6B4 type of output tube, and the driver operates with considerably lower distortion.

The first two stages of the amplifier are somewhat unusual. The first stage, which is a voltage amplifier, is directly coupled to the second stage, a cathodyne inverter. This method of coupling is made possible by the high operating potential on the inverter cathode. The two stages are self balancing and bias themselves to a low distortion operating point.

The heart of the amplifier is the output transformer. This device must provide response that extends well beyond the limits of the audio band in order to limit phase shift to the requisite degree in the feedback circuit. It is the degree of success with which this is achieved that makes for fidelity in musical transient reproduction. The original specifications of the output transformer call for response which is down not more than 3 db. at 3 cps and at 60 kc. An American counterpart, the *Acrosound* TO-290, faithfully copies the performance of the original and is used in the circuit here described.

The type 7N7 tube has been selected for use in the voltage amplifier stages because of its shielded construction, low internal capacity, and symmetrical base layout that permits direct point-to-point wiring. The output tubes are the type 807, the characteristics of which are similar to the KT-66 British type used in the original. The plate resistance, however, is about 20% greater for the 807, and this requires a corresponding increase in the plate-to-plate match of the output transformer in order to obtain the same low figures of distortion in the output. The plate-to-plate impedance of the transformer is, therefore, 12,000 ohms instead of the 10,000 ohms specified for the original. Another excellent

[2]Wireless World: April, May 1947. August 1949.

[3]Keroes, H. I. "Building the Williamson Amplifier," Radio & Television News, Dec. 1950, p. 52.

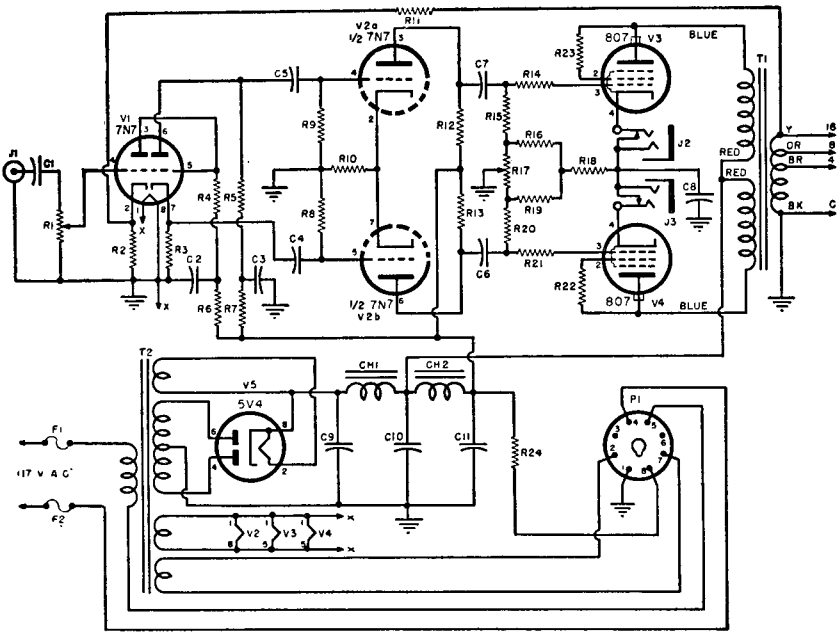

R_1—1 megohm vol. control
R_2—470 ohm, ½ w. res.
R_3, R_5—22,000 ohm, ½ w. res. (matched pair ± 1%)
R_4—47,000 ohm, 1 w. res.
R_6—33,000 ohm, ½ w. res.
R_7—22,000 ohm, ½ w. res.
R_8, R_9—470,000 ohm, ½ w. res.
R_{10}—560 ohm, ½ w. res.
R_{11}, R_{24}—4700 ohm, ½ w. res.
R_{12}, R_{13}—47,000 ohm, 2 w. res. (matched pair ± 1%)
R_{14}, R_{21}—1000 ohm, ½ w. res.
R_{15}, R_{20}—100,000 ohm, ½ w. res.
R_{16}, R_{19}, R_{22}, R_{23}—100 ohm, ½ w. res.
R_{17}—100 ohm, 2 w. wirewound pot.
R_{18}—300 ohm, 10 w. res.
C_1, C_4, C_5—.05 μfd., 600 v. cond.
C_2, C_3—10/10 μfd., 450 v. elec. cond.
C_6, C_7—.25 μfd., 600 v. cond.
C_8—500 μfd., 50 v. elec. cond.
C_9—4 μfd., 600 v. cond.
C_{10}, C_{11}—20 μfd., 450 v. elec. cond.
T_1—Output trans. 12,000 ohm plate-to-plate, to 4, 8, 16 ohms (Acrosound TO-290)
T_2—Power trans. 425-0-425 v. @ 130 ma.; 6.3 v. @ 3.5 amp.; 6.3 v. @ 3.5 amp.; 5 v. @ 3 amp. (Acrosound TP-310, Stancor P-4004, or equiv.)
CH_1—4 hy., 150 ma. filter choke
CH_2—4 hy., 50 ma. filter choke
J_1—Input jack
F_1, F_2—Fused line plug
P_1—Octal plug
V_1, V_2—7N7 tube
V_3, V_4—807 tube
V_5—5V4 tube

Fig. 21-3. Circuit diagram of an American version of the "Williamson" amplifier.

output tube which may be used is the *Western Electric* type 350A. This tube has greater power capabilities than the 807 and will provide up to 25% more output.

One deviation has been permitted in the circuit and is based on the operating characteristics of the 807. An electrolytic condenser has been added across the cathode biasing resistor arrangement of the output stage and has been found to be of material advantage in further reducing distortion at high output levels.

A suggested preamplifier circuit is shown in Fig. 21-4. It incorporates tone controls and compensating controls for the various recording characteristics and is designed for use with reluctance cartridge input. Crystal cartridges can, however, be operated into the tuner input channel.

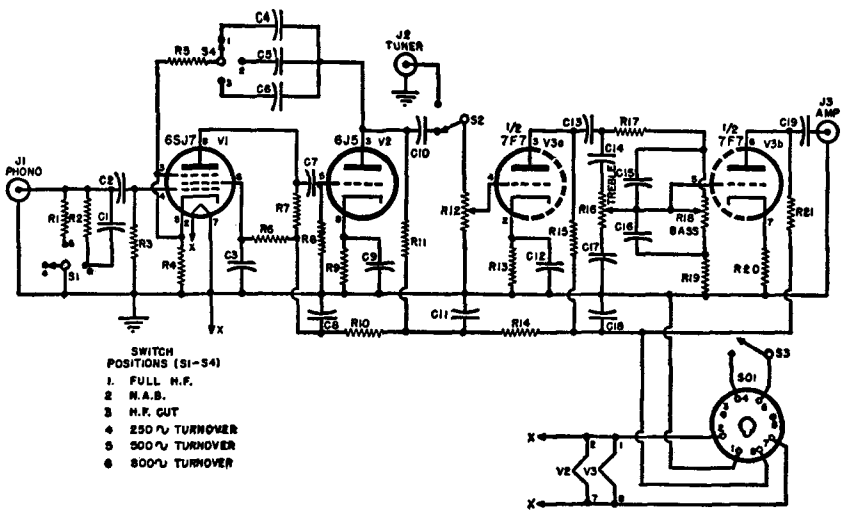

R_1—15,000 ohm, ½ w. res.
R_2, R_{10}, R_{14}—10,000 ohm, ½ w. res.
R_3—10 megohm, ½ w. res.
R_4—560 ohm, ½ w. res.
R_5—27,000 ohm, ½ w. res.
R_6—1.2 megohm, ½ w. res.
R_7—270,000 ohm, ½ w. res.
R_8—470,000 ohm, ½ w. res.
R_9, R_{13}, R_{20}—1100 ohm, ½ w. res.
R_{11}—47,000 ohm, ½ w. res.
R_{12}—1 megohm pot.
R_{15}, R_{21}—22,000 ohm, ½ w. res.
R_{16}, R_{18}—3 megohm pot.
R_{17}—300,000 ohm, ½ w. res.
R_{19}—30,000 ohm, ½ w. res.

C_1, C_{17}—.002 μfd., 400 v. cond.
C_2, C_5, C_{16}—.01 μfd., 400 v. cond.
C_3—.5 μfd., 400 v. cond.
C_4—.02 μfd., 400 v. cond.
C_6—.007 μfd., 400 v. cond.
C_7, C_{10}, C_{19}—.05 μfd., 400 v. cond.
C_8, C_{11}, C_{18}—20 μfd., 450 v. elec. cond.
C_9, C_{12}—20 μfd., 25 v. elec. cond.
C_{13}—.03 μfd., 400 v. cond.
C_{14}—500 μμfd. mica cond.
C_{15}—.001 μfd., 400 v. cond.
J_1, J_2, J_3—Open circuit jack
S_1, S_4—S.p. 3-pos. rotary sw.
S_2, S_3—S.p.s.t. sw.
SO_1—8-prong socket

Fig. 21-4. Suitable preamplifier with equalizers for use with the amplifier shown in Fig. 21-3.

Performance

The distortion-free characteristics of the amplifier are immediately apparent upon the first playing. The lack of false bass response and bass transient hangover is also striking, and can be attributed to the exceptionally low output impedance of the amplifier which is in the neighborhood of three-tenths of an ohm on the sixteen ohm tap. The damping factor seen by the speaker is, therefore, about 48, and results in a real improvement in the transient characteristics of the speaker.

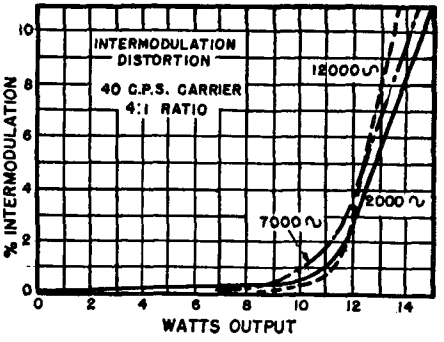

Fig. 21-5. Intermodulation distortion curves.

The curves taken of intermodulation, shown in Fig. 21-5, reveal the low distortion content of the output. It is clearly seen that the 10 watt rating of the amplifier is a conservative one, since for any condition of measurement the intermodulation is less than 1%. It might also be mentioned that these curves were taken at a lower-than-normal plate supply voltage of 400 volts on

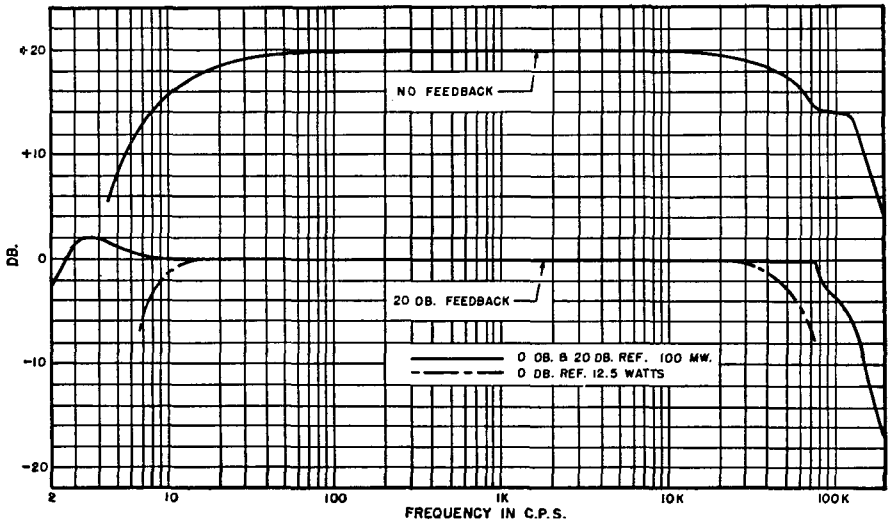

Fig. 21-6. Frequency response characteristics of the amplifier.

the 807 output tubes. For the normal plate supply voltage of 425 volts, about 15% more output or 11.5 watts can be expected for the same amount of intermodulation distortion.

The excellent transient characteristics of the amplifier can be seen from the frequency response curve shown in Fig. 21-6. The response is shown for a 100 milliwatt output level and under the conditions both with and without feedback. The influence of the output transformer can easily be judged from these curves. Without feedback the response is down 3 db at 55 kc and at 12 cps. It should be noted that this response is that of the complete amplifier and includes the normal roll-off in gain of the individual stages as caused by the tube input capacities and the effect of the

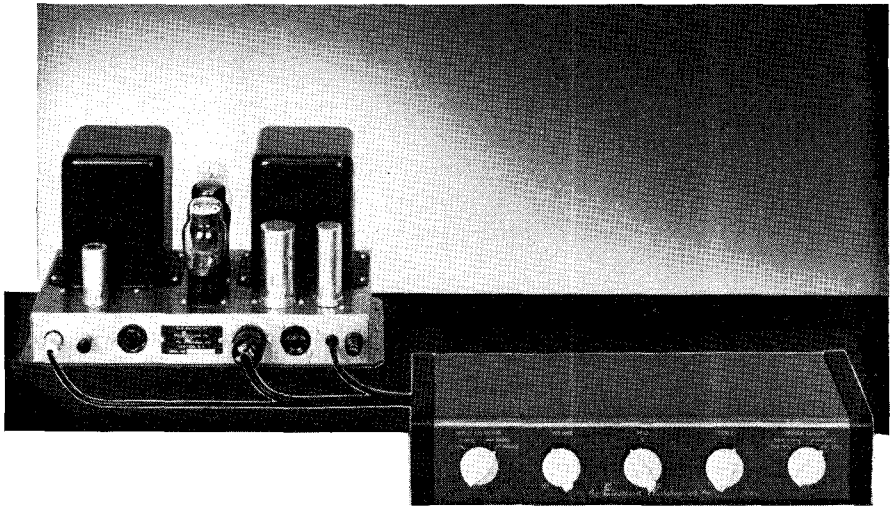

Fig. 21-7. The Electranic Workshop A-20-5 amplifier and remote control preamp. (Courtesy Electranic Workshop)

stage coupling condensers. With feedback the curve is flat to 75 kc and lacks the usual resonant rise associated with feedback amplifiers at the high frequency end of the band; a condition that causes ringing and a dissipation of power at unwanted frequencies. The response at maximum output power taken with distortion limited to 2% is also noteworthy and indicates the undistorted response to be down only 3 db. at 8 cps and at 50 kc.

Electronic Workshop A-20-5 System

In a home music system it is usually most convenient, both physically and electrically, to separate the power amplifier from the controls and switches. Power amplifiers are, of necessity, rather large. They tend to get quite warm, and the magnetic field of the system power transformer can easily disturb sensitive low-level circuits. The controls need not be so bulky; with the requisite preamplifiers, they can be concentrated in a small control unit which can be placed wherever it is most comfortable for system operation, while the power amplifier is put somewhere out of sight in the bowels of the system, where its heat and hum fields will not be inconvenient. For these reasons, the *Electronic Workshop* A-20-5

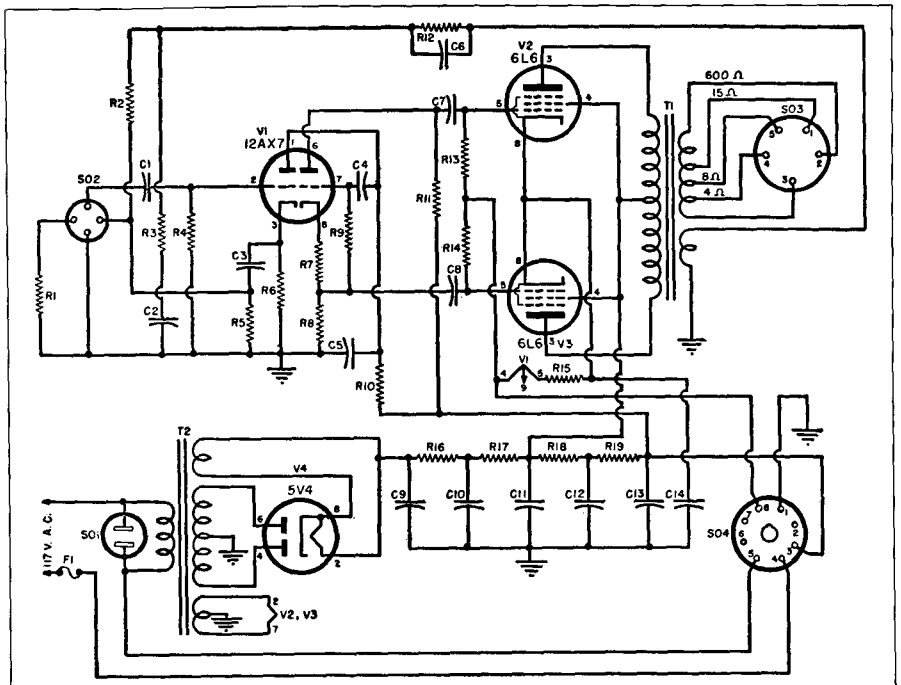

R_1—100 ohm, ½ w. res.
R_2, R_6—3300 ohm, ½ w. res.
R_3—8200 ohm, ½ w. res.
R_4, R_9—2 megohm, ½ w. res.
R_5—330 ohm, ½ w. res.
R_7—2200 ohm, ½ w. res.
R_8, R_{11}—100,000 ohm, ½ w. res.
R_{10}—390,000 ohm, ½ w. res.
R_{12}—4700 ohm, ½ w. res.
R_{13}, R_{14}—270,000 ohm, ½ w. res.
R_{15}—125 ohm, 10 w. wirewound res.
R_{16}, R_{17}—125 ohm, 5 w. res.
R_{18}, R_{19}—4700 ohm, 1 w. res.
C_1, C_4—.01 μfd., 400 v. cond.
C_2, C_6—.0015 μfd., 400 v. cond.
C_3—25 μfd., 20 v. elec. cond.
C_5—100 μμfd. mica cond.
C_7, C_8—.1 μfd., 400 v. cond.
C_9, C_{10}, C_{11}, C_{12}, C_{13}—20 μfd., 450 v. elec. cond.
C_{14}—20 μfd., 450 v. elec. cond.
SO_1—Conventional power line socket
SO_2—4-prong socket (from P_2, control unit)
SO_3—5-prong socket to speaker
SO_4—Octal socket (from P_1, control unit)
F_1—3 amp. line fuse
T_1—Output trans. 6000 ohm p.p. to 4, 8, 15, 600 ohms with feedback winding
T_2—Power trans. 375-0-375 v. @ 150 ma.; 5 v. @ 3 amps.; 6.3 v. @ 1.8 amps.
V_1—12AX7 tube
V_2, V_3—6L6 tube
V_4—5V4 tube

Fig. 21-8. Schematic diagram of the A-20 amplifier and its power supply.

Amplifier System[4] is divided into two units: the A-20 Basic Amplifier, and the C-5 Control Unit. See Fig. 21-7.

The A-20 Basic Amplifier is rated at 20 watts with less than 1% distortion. Its frequency response is flat within ± 1 db from 20 cycles to 20,000 cycles. Full power at rated distortion is delivered over the range of 50 cycles to 10,000 cycles—at 20 cycles and at 20,000 cycles the power capability is decreased by less than 3 db. Signal-to-hum ratio is better than 85 db, while the sensitivity is 1.5 volts for 20 watt output. This is achieved in an amplifier 14 inches long, 7¾ inches high, and 7½ inches deep, including the rather large transformers.

The output tubes are 6L6GT's. Since they require only about 40 volts grid-to-grid, they are driven directly from the split-load or cathodyne phase inverter, which in turn is driven from a single triode stage. Using a 12AX7 for both these functions, the required gain is easily obtained, with plenty of margin for the 18 db. of inverse feedback which is used. Feedback is taken from a tertiary winding (Fig. 21-8) on the output transformer, thus compensating for any distortion the transformer may introduce and at the same time leaving the output windings floating with respect to ground, so that an ungrounded system may be driven. The cathodyne phase inverter, because of the large amount of inverse feedback produced by the cathode load, is inherently quite linear, and the result of all the feedback is to make the amplifier quite insensitive to tube variations or line-voltage fluctuations. A further advantage of the 18 db of feedback is a damping factor of five, which promotes low distortion operation of the loudspeaker.

The 12AX7 driver and phase inverter has its filament power supplied from the dc cathode current of the 6L6's, thus eliminating any hum from this heater. In addition, up to 24 volts of dc at 150 milliamperes is available to heat the filaments of the control-unit (Fig. 21-9) tubes. Because of the configuration of the 6L6 grid returns and bias resistors (the latter including the 12AX7 filament) the 6L6's act as a constant-current source of dc, and adding cathode-circuit resistance in the form of control-unit heaters has a negligible effect on the operating point of the output tubes.

The rectifier is a 5V4, a tube which uses heater-cathode type construction. The rectifier cathode takes about the same time to reach operating temperature as the 6L6 cathodes. Thus the high voltage does not appear across the input filter condenser until the 6L6's are ready to draw plate current. This reduces the surge voltage on the filter condensers and contributes to their longer life. Since the system is class A throughout, the poor regulation of a condenser-input filter is not important.

A shaping network is employed in the feedback loop to insure adequate transient response. It is correct for undesirable phase shifts in the region of 75 kilocycles.

The C-5 Control Unit is the other element of the A-20-5 Amplifier System. It utilizes two 12AX7's, with dc on the filaments to minimize hum (over-all signal-to-hum ratio, including the power amplifier, is better than 75 db), and with considerable inverse feedback in three of the triode sections to minimize distortion and make the effects of tube aging negligible over a longer period of time than would be possible without feedback. The fourth section is the phonograph preamplifier. It is run at such a low level that amplitude distortion is no problem.

The continuously-adjustable tone controls in the C-5 provide about 18 db of bass or treble boost, and about 24 db of attenuation at the extreme frequencies (Fig. 21-10) without interaction between bass and treble controls. The tone controls are arranged to have no effect in the region around 800 cycles, so that there will be a minimum change of volume with change in tone control set-

[4]Sterling and Sobel. "A High-Quality Audio System" Radio & Television News, March, 1951, p. 39.

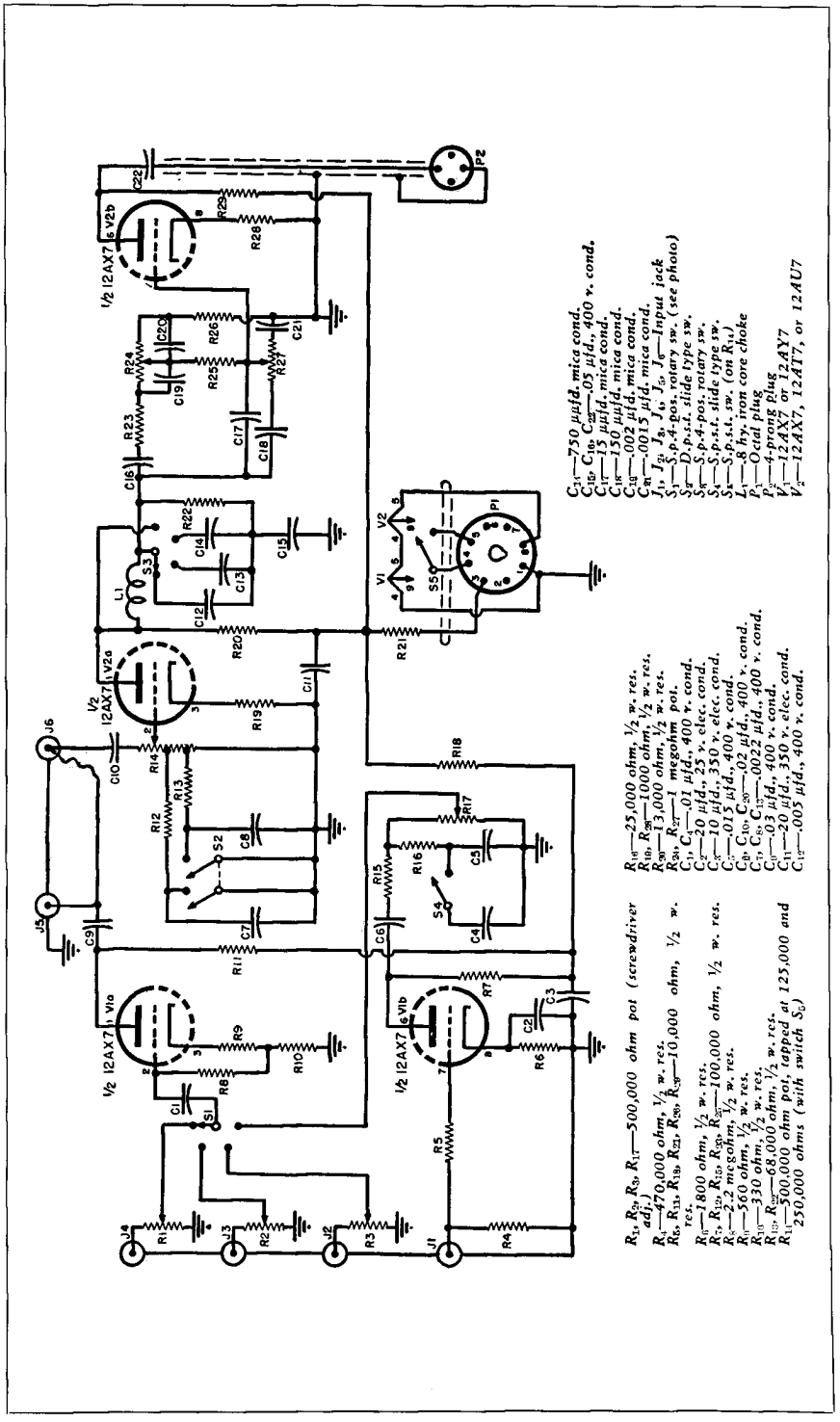

Fig. 21-9. The Electronic Workshop C-5 remote control preamp-equalizer.

tings.[5] With this feature, the listener can experiment to find the setting which gives most pleasing reproduction without having the effects of the tone control setting masked by changes in the apparent loudness of the program. Maximum effectiveness of the tone controls with a minimum of juggling between tone and volume controls is thus assured.

For phonograph records, some form of treble cut-off filter to reduce noise and high-frequency distortion is desirable. Dynamic methods, such as the *Scott* Noise Suppressor, are very effective. The tone controls incorporated in the C-5 are not very effective for this purpose, because their slope is gradual and because the total attenuation at high frequencies is not great enough. A scratch filter should have a rapid transition between passband and attenuation band and a sharp slope beyond the cut-off frequency to cut off scratch cleanly and yet sacrifice as little of the music as possible.

The high-frequency filter in the C-5 Control Unit has a slope beyond cut-off of 12 db per octave. It is critically damped in order to provide optimum transient response. No ring or overshoot is evident when the filter is in the circuit. In addition to this filter, which is operative on all input channels, A *Scott* Noise Suppressor can be connected into the system through connectors on the rear of the control unit. It, too, is effective on all input channels, so that it may be used on broadcast records as well as those played on the home music system.

With a compensated volume control, level sets in the various input channels are not merely convenient, but essential to the proper operation of the compensation feature. The convenience of having all program sources at the same level is considerable. Each of the four channels of the C-5 is equipped with an independent level-set potentiometer. By incorporating four channels ample provision is made for a complex system including phonograph, radio, television, and a tape or disc recorder. An output jack supplies about .5 volt at an impedance of 10,000 ohms for feeding a tape recorder. This output is ahead of tone and volume controls, so that the material being recorded is unaffected by the control manipulation necessary to compensate for room acoustics, conversation, etc.

The phonograph channel has a sensitivity of better than 7 millivolts—high enough for any of the available magnetic cartridges working with LP records. Performance of any cartridge is critically dependent on the impedance into which the cartridge works. For the *General Electric* RPXO40 (the "variable reluctance") cartridges, the correct load resistance for 78 rpm records is .5 megohm shunted by 500 micromicrofarads. This is supplied by the C-5 Control Unit (plus the cable capacitance of the usual lead from phonograph to control unit). For LP records, shunting the *G-E* cartridge with 8200 ohms gives a high frequency roll-off which is just complementary to the NARTB pre-emphasis curve used in recording. When plug-in heads are used for the two types (LP and standard) of cartridges required, the 8200 ohm resistor can be soldered across the LP cartridge right in the head, thus changing the equalization automatically when changing the cartridges. If such a system is inconvenient, the treble tone control incorporated in the C-5 approximates the NARTB equalization curve when turned to the extreme counter-clockwise position. (Note: The values of terminating resistance quoted here apply *only* to the *G-E* RPXO40 and RPXO41 cartridges.)

The optimum low-frequency turnover for phonograph equalization is 450 cycles. With this turnover frequency and the tone controls, one can equalize within 3 db for any of the current or past recording characteristics. However, most similar equipment uses a turnover frequency of 270 cycles, to give a more "brilliant" effect at high frequencies. To provide for comparisons

[5]Sterling, Howard T.; "Flexible Dual Control System," Audio Engineering, February, 1949.

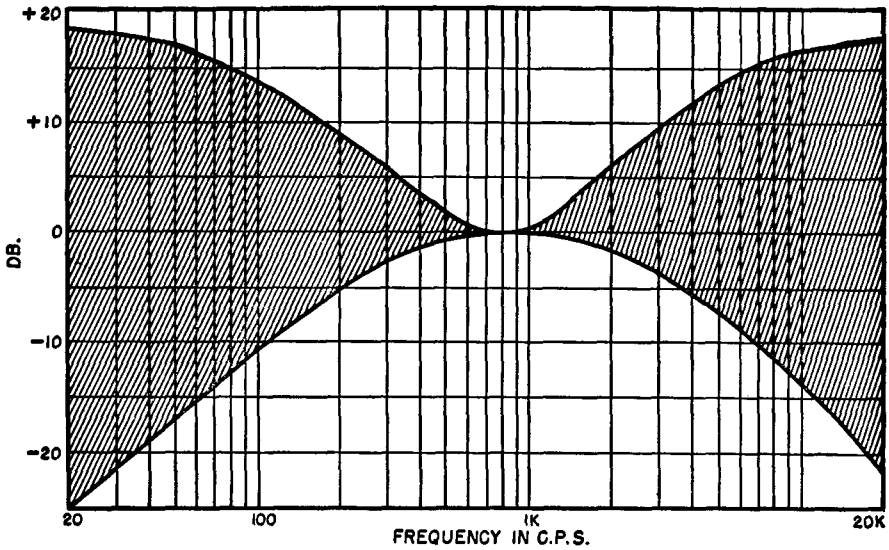

Fig. 21-10. Over-all range of the treble and bass controls of the C-5 preamp-equalizer.

with other equipment, both turnover frequencies are available, selected by a slide switch on the rear of the control unit.

Package Systems

Improvements in phonograph records, magnetic pickups, and broadcast transmission have made it possible to bring into the home a quality of sound reproduction hitherto unattainable. Realization of the listening pleasure these improvements make possible, however, is unattainable with today's commercially conceived radio-phonograph consoles. The limitations of the furniture cabinet make impossible the reproduction of full, natural, enjoyable bass notes; the economies imposed by competitive selling considerations prevent manufacturers from using high quality components—speakers, amplifiers, etc.,—that have been developed for the professional field, where the highest possible quality is not merely desirable, but absolutely essential. Average listeners, of course, have come to accept "radio sound"; they are satisfied with recognizable intelligibility in speech and a sufficiently marked rhythm in music; they are tolerant of a fair resemblance between what they hear and the quality of the original sound. The inherent limitations of "radio sound," inescapable in the commercial radio-phonograph console, have heretofore made it necessary to be satisfied with what little sound quality came through. Fortunately, there is one way —and only one—in which fastidious music lovers can enjoy to the full the superb reproduction which the technical advances in science have made possible. This is to select the finest quality components—the professionally engineered tuner, amplifier, speaker, and record changer (Fig. 21-11) and then to connect these components together under conditions which will permit these superlative instruments to function at their full efficiency. It is as much a part of a home as the heating system and the other essentials to comfort and gracious living. It completely emancipates a fastidiously designed room interior from the space-consuming "radio furniture" whose design, no matter how ambitious an attempt has been made to reconcile it with prevailing fashions in furniture, can never be perfectly harmonized with any individual's personal scheme of interior decoration. The architecture of

practically all living rooms provides one or more spaces that will fulfill all the basic requirements for the placement of the elements of the Home Music System as shown in the illustrations. The quality of sound, as it is heard by listeners in the room, is affected by the placement of the speaker at the correct height for perfect lateral and horizonal sound distribution. The quality is also dependent upon having an adequately large air space *behind* the speaker, thus, the placement of the speaker is the most important consideration in relating the Home Music System to a room. The location of the other elements—the radio receiver, the amplifier, and the phonograph record changer—is a matter of practical convenience only. The home owner should experience no difficulty in deciding upon the proper location for the components of the Home Music System: the examples of installations shown on preceding pages will suggest adaptations in one's own home. The installation of the Home Music System, indeed, is a welcome challenge to the imagination and ingenuity of an individual home owner: he may, however, wish to consult an interior decorator for ideas. After a decision regarding the location of the elements has been reached, the home owner may, if he is reasonably proficient in the use of carpenter's tools, wish to do the installation work himself; if not, a neighborhood carpenter may be called in. For new homes, architects are eagerly turning to the new concept of a music system built into the home; and are making provisions for the inclusion of a Home Music System at the blueprint stage of the design of the home. It is noteworthy that the cost of the Home Music System, thus integrated into the basic design and construction plans of a new home, becomes a very minor part of the total financing and amortization plan, in the same way as the heating plant and other elements that contribute to comfort and living enjoyment.

Physical Requirements

Certain tested engineering and acoustical principles, simple in application in a home, dictate the choice of the position of the loudspeaker. It is the loudspeaker which, through the miracle of electronic design, converts electrical energy, transmitted by wires, into sound energy, the sound your ears perceive. The correct propagation of this sound is affected by the position of the speaker, both in the way it faces the room, and in the size and treatment of the cavity into which the rear of the speaker radiates. From the point of view of perfect listening by people in the room, the speaker should be located as near to "normal listening height" as possible, that is, between four and six feet from the floor. We are accustomed to hearing sound that emanate from sound sources at this height, as when people are conversing with one another, either seated or standing; thus the mind subjectively increases the illusion of "presence," the illusion that the artist is present in the room. The conventional radio console produces sound at below knee level, an unnaturally placed source that affects its quality as perceived by the listener. The loudspeaker should be mounted so that its front surface faces the area in the room in which members of the family and friends are usually seated. It is not necessary, with loudspeakers such as the *Altec Lansing*, Fig. 21-11, to sit in direct line with the speaker axis, because the multicelular horn disperses sound

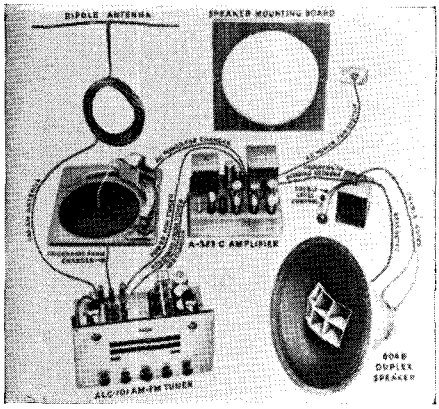

Fig. 21-11. Necessary quality components for a complete home music system. (Courtesy Altec Lansing)

over a 40 degree angle vertically and a 60 degree angle horizontally. Listeners should, however, be comfortably within this 40 by 60 degree angle. The back of the speaker should open upon a closed air cavity of sufficient volume (10 cubic feet, if possible) to compare in cubic dimension with the air chambers in such musical instruments as the bass viol, the tuba, or the tympani. If more space is available, so much the better. It may be desirable to give consideration to the installation, or possible later addition, of television in selecting a location for wall mounting of the speaker. A television picture tube may be located directly adjacent to the speaker, or a television console positioned directly below the speaker. Provision has been made in the *Altec Lansing* Home Music System for television sound production: all that needs to be added is the picture projection mechanism. The location of the AM-FM radio receiver/or tuner, the amplifier, and record changer is dictated simply by considerations of ease of use. The receiver or tuner should be located in a place where it is reasonably protected from dust, and where sufficient ventilation exists to dissipate the heat generated by the radio tubes. It should be removable when servicing is needed, and the location should provide facilities for running cables to the amplifier, antenna, and record changer. The amplifier should be reasonably close to the receiver and to an ac electric power outlet. The record changer should be conveniently close to the space used to store records; it should be on a solid, level base; and it is desirable to enclose the changer as a protection from dust.

CHAPTER 22

PA Sound Systems

The electrical and mechanical requirements of equipment for sound reinforcement and distribution.

● The elements of a typical PA (Public Address) system include one or more microphones, an FM-AM tuner, a phono turntable, mixers, amplifier and one or more loudspeakers. The more elaborate systems include other refinements such as telephone lines, tape recorders and voltage-regulated power supplies.

Applications

There is almost unlimited need for sound distribution in industry, entertainment and in educational institutions. The chart, Fig. 22-1, shows the broad markets for the sound technician to explore. In addition are the special requirements for industrial plants engaged in war production.

Most of the essential components of a sound system are described elsewhere in this volume—therefore our discussion will show how these components are used to make up various complete systems.

The diagrams to follow show, in block form, representative systems for many applications. The equipment type numbers are those of *Western Electric*. Components of other manufacturers, if of equivalent specifications, may be used.

General System Plan

All sound systems in Figs. 22-2 thru 22-8 are designed around a so-called zero level bus. This means that the volume level of the program at the bus, as read on a volume indicator, is in the neighborhood of reference volume level. The level of the program at the bus is not necessarily fixed at exactly zero level, but may vary above or below this level depending on what is most convenient for the particular requirements of the system. The amplifiers used may be classified as power amplifiers, line amplifiers, and input or preamplifiers. Power amplifiers are used between the bus and the loudspeakers. The maximum power output capacity may be of any value, but is usually greater than 5 watts. The gain should be sufficient to raise any normal bus level to full output capacity. A bridging type input circuit is usually used because this permits operating a large number of power amplifiers from one bus. Line amplifiers are used to raise the level of weak programs to the level at which the bus is operated. With a particular line amplifier the maximum level at the bus is limited by the load carrying capacity of the line amplifier, and the minimum level by the noise from the line amplifier. Preamplifiers are used ahead of the line amplifier with very weak programs, where the gain of the line amplifier is not sufficient. They are also used when amplifiers before a mixer are required.

School System

In Fig. 22-2 is shown a circuit of a typical one-channel school system using 117A Amplifiers. A similar system using 121A Amplifiers is shown in Fig. 22-3. Provision is made for an auditorium loudspeaker and fifty classroom loud-

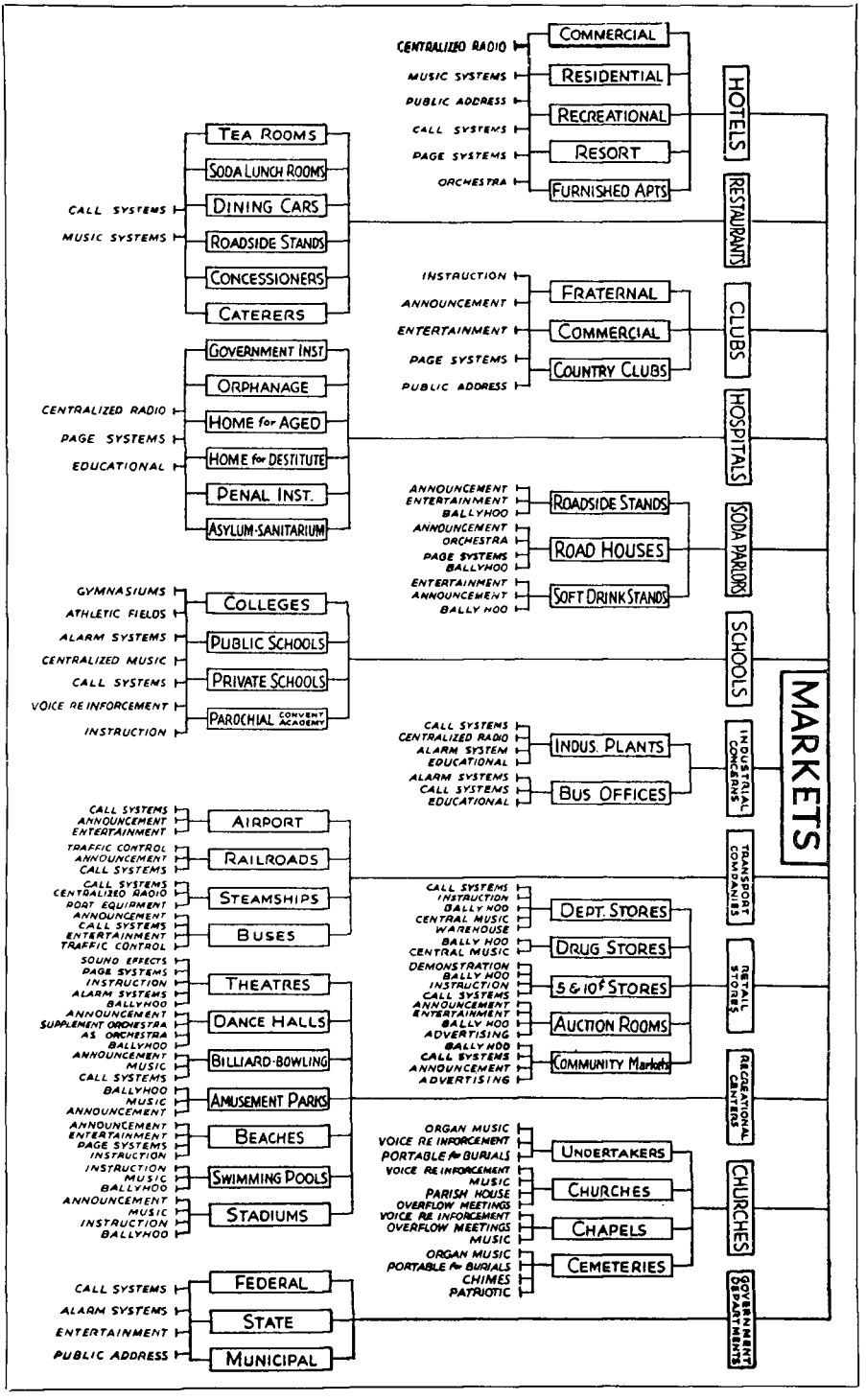

Fig. 22-1. Showing the many applications for sound reinforcement systems. (Courtesy Operadio)

speakers; and for four microphones, a phonograph and one radio receiver per channel.

The quantitative information given below applies specifically to the one-channel system of Fig. 22-2. Similar calculations may be made for the system of Fig. 22-3 which uses the 121A Amplifier.

Gain

117A Amplifier—maximum	82 db	
118A Amplifier—set at	36 db	
Gross Gain		118 db
Loss in 600 ohm resistance terminating 117A Amplifier		6 db
Net Maximum Gain		112 db

This maximum gain may be reduced by using the master and mixer volume controls associated with the 117A Amplifier.

Noise in Output

We are more interested in the output noise for some average condition of use than we are in the maximum output noise. We shall therefore compute the noise for a condition of 100 db net gain, obtaining the reduction of 12 db from maximum gain by means of the master gain control potentiometer associated with the 117A Amplifier. This 12 db reduction of gain causes a decrease of about 10 db in the level of the noise from the 117A Amplifier.

For the condition of 100 db net gain of the system, the weighted noise in the output due to various sources within the system will be:

Noise level from 117A Amplifier	42 dbm	
Plus net gain after 117A Amplifier	30 db	
Noise level in output due to 117A Amplifier		—12 dbm
Noise level from 118A Amplifier		—27 dbm

*dbm = power level referred to .001 watt.

The higher level of —12 dbm will be the approximate noise in the output.

These noise levels represent the noise contributed by the system itself and take no account of pickup in input sources or wiring. Proper twisting and shielding of input circuit wiring will make pickup noise in these circuits negligible.

Volume Indicator Setting

The setting of the volume indicator, for the maximum volume level of speech or music which should be taken from the 118A Amplifier, may be computed as follows (all levels are relative to .001 watt):

Maximum single frequency output capacity of 118A Amplifier	+47 dbm	
Less margin for peaks	6 db	
Volume indicator level at output		+41 vu
Less net gain of 118A Amplifier and loss in bus		30 db
Volume indicator setting		+11 vu

This volume level of +11 vu is the volume indicator level at the bus for maximum program output capabilities of the 118A Amplifier.

Output Load Impedance

Let R_1 = impedance of 50 classroom loudspeakers of 500 ohms each, connected in parallel = 10 ohms

R_2 = impedance of one 12 ohm auditorium loudspeaker

R = amplifier load impedance

Then $\frac{1}{R} = \frac{1}{10} + \frac{1}{12} = .1 + .0833 = .1833$

and $R = 5.5$ ohms.

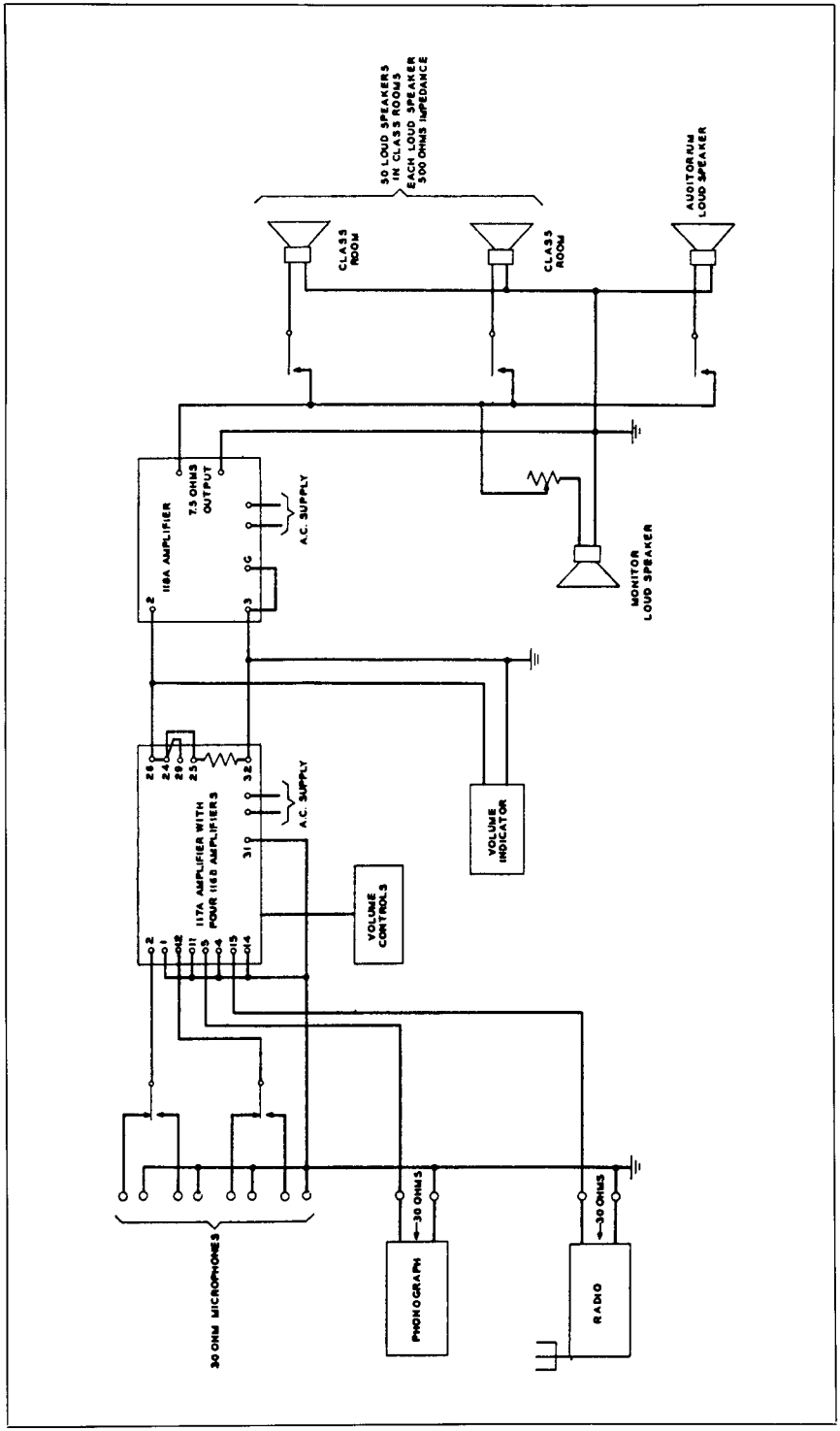

Fig. 22-2. Typical Western Electric single channel school system.

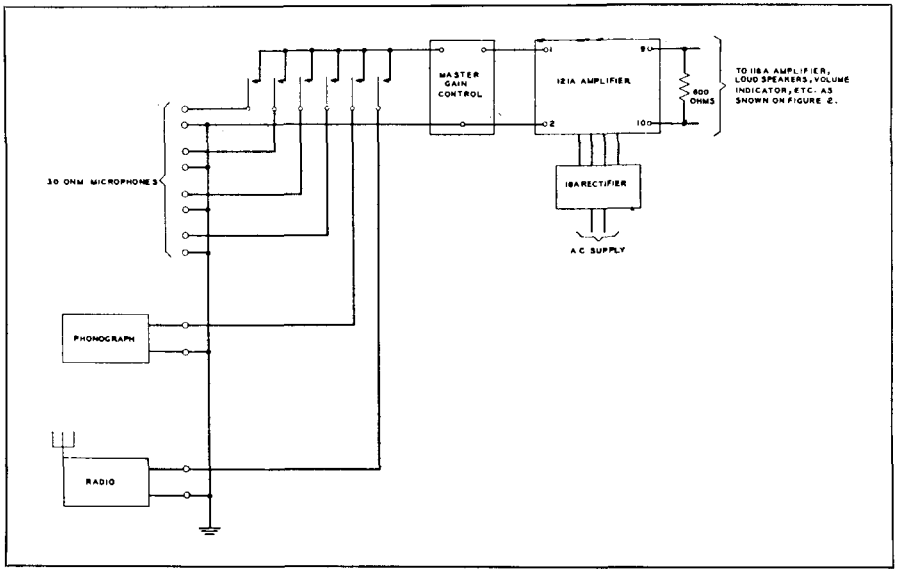

Fig. 22-3. Alternate one channel school system.

Output Power Distribution

P = maximum power from 118A Amplifier
= 50 watts

P_1 = power available for all classroom speakers

P_2 = power available for auditorium speaker

$$P_1 = \frac{PR}{R_1} = \frac{50 \times 5.5}{10} = 27 \text{ Watts}$$

$$P_2 = \frac{PR}{R_2} = \frac{50 \times 5.5}{12} = 23 \text{ Watts}$$

Power available for each classroom is 27/50 or 0.54 watts.

These values of maximum power capacity may be converted into power levels in dbm by using Fig. 22-4, and into maximum usable volume levels by subtracting the 6 db margin for peaks from each maximum power level.

	Maximum Power Level	*Maximum Volume Level*
All classrooms	+44.2 dbm	+38.2 vu
Auditorium	+43.5 dbm	+37.5 vu
Each classroom	+27.3 dbm	+21.3 vu

Auditorium Loudspeaker Volume

It may be found, with some programs which are being reproduced in both auditorium and classrooms, that a reduction of the volume in the auditorium is necessary while the volume in the classrooms is kept at a maximum. This may be done with a variable resistance in series with the auditorium loudspeaker.

If a 12 ohm loudspeaker is used, the volume reductions obtained with certain series resistances are approximately as follows:

Series Resistance	*Loss*
12 ohms	6 db
36 ohms	12 db
84 ohms	18 db

Efficiency of Classroom Loudspeakers

The classroom loudspeakers may be any loudspeakers of suitable quality. The peak power level of +27 dbm available for each loudspeaker will give adequate volume on speech if a loudspeaker is used which has a relative loudness efficiency equal to that of the 751B. If a lower efficiency loudspeaker is used, the volume

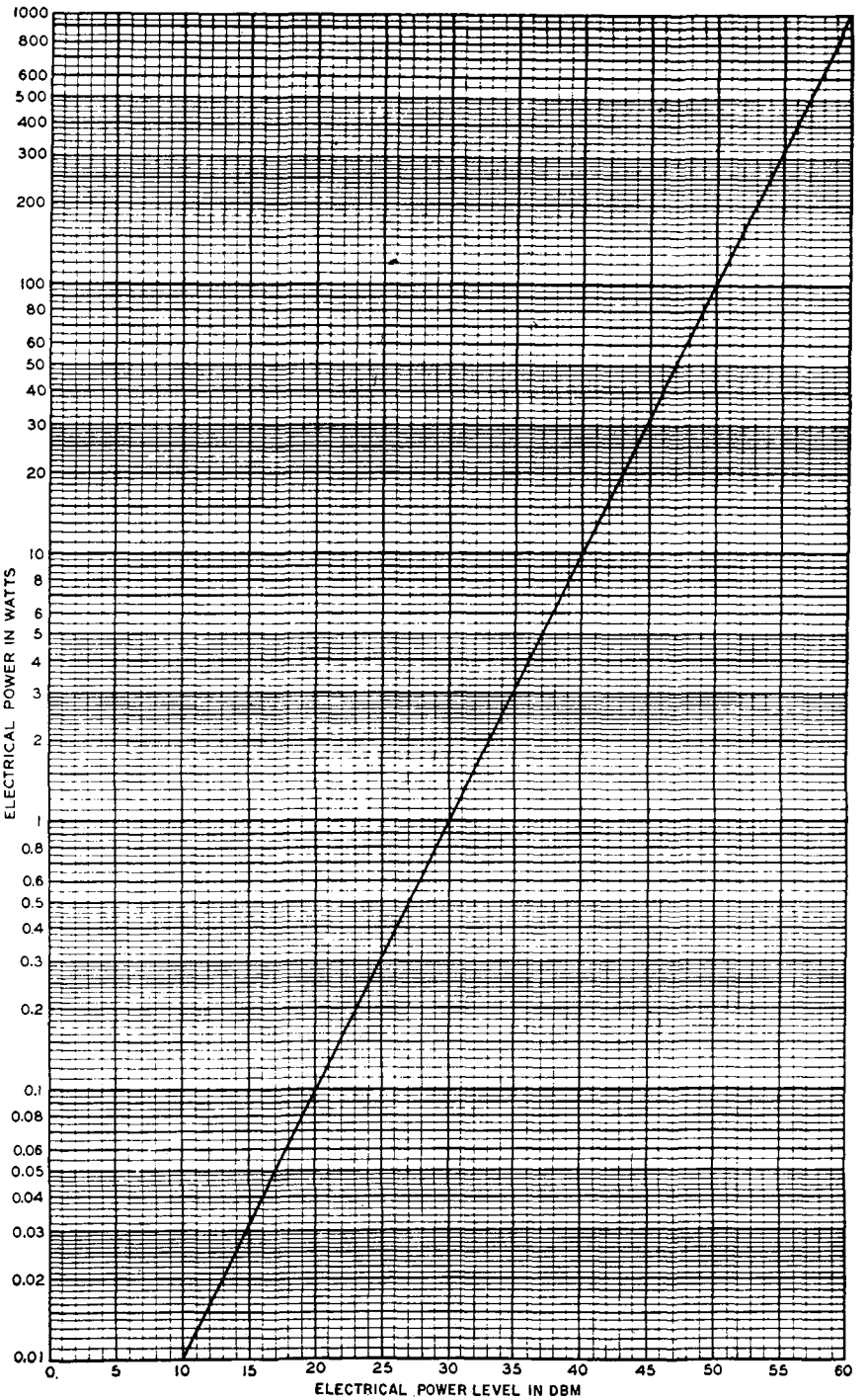

Fig. 22-4. Electrical power vs. electrical power level.

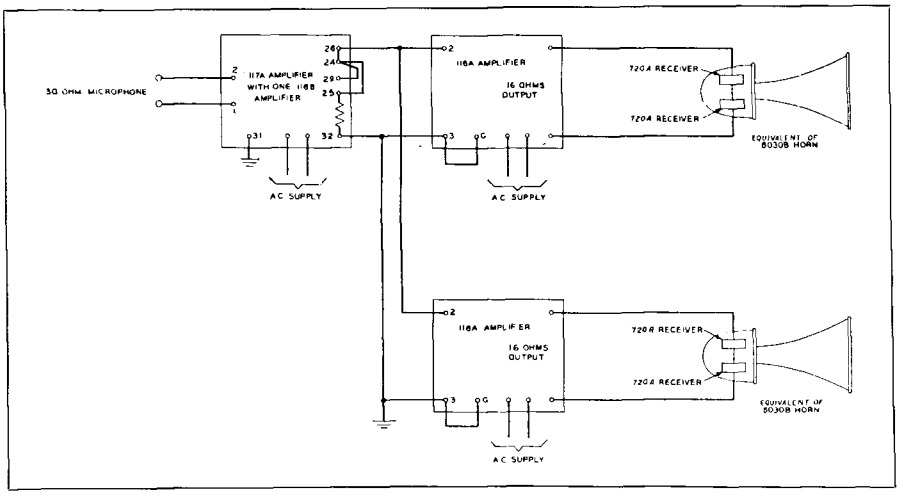

Fig. 22-5. Simple outdoor announcing system, using horn projectors.

will be lower; or the level for each loudspeaker may be increased by assigning fewer loudspeakers to one 118A Amplifier and adjusting the impedances so that each loudspeaker gets more power.

System Using 121A Amplifier

The system shown in Fig. 22-3 uses the 121A Amplifier and differs in performance from that using the 117A Amplifier in these respects:

1. The gain of the 121 Amplifier is 4 db lower, necessitating the use of 4 db more gain in the 118A Amplifier.
2. The noise from the 121A Amplifier is lower, giving less noise in the output.
3. The frequency characteristic of the 121A Amplifier is somewhat better than that of the 117A Amplifier.
4. If a four-channel mixer is wanted, it must be constructed in one of the usual forms and used ahead of the 121A Amplifier.

Variations in Requirements

1. If more classroom speakers are needed, an additional 118A Amplifier for each channel may be bridged across the bus.
2. A separate 118A Amplifier may be associated with the auditorium loudspeaker. This permits up to 100 classroom loudspeakers on one 118A Amplifier. In a two-channel system the input of the "auditorium" 118A Amplifier may be switched to the bus of either channel, and the potentiometer on this amplifier will then provide a separate volume adjustment for the auditorium.
3. If only one radio is required in the two-channel system, it may be connected to both channels as is done with the phonograph.
4. If four channel mixing is needed for stage use in the auditorium additional switches may be used to connect terminals 5 and 15 of the 117A Amplifiers to additional microphone circuits, instead of to the radios and phonograph, on the occasions when the mixing is needed.

Outdoor Announcing System

In Fig. 22-5 is shown the circuit of a simple outdoor announcing system using horns. This system has 100 watts electrical output and combined with the 720A Receiver (driver) produces a large amount of acoustical power output which

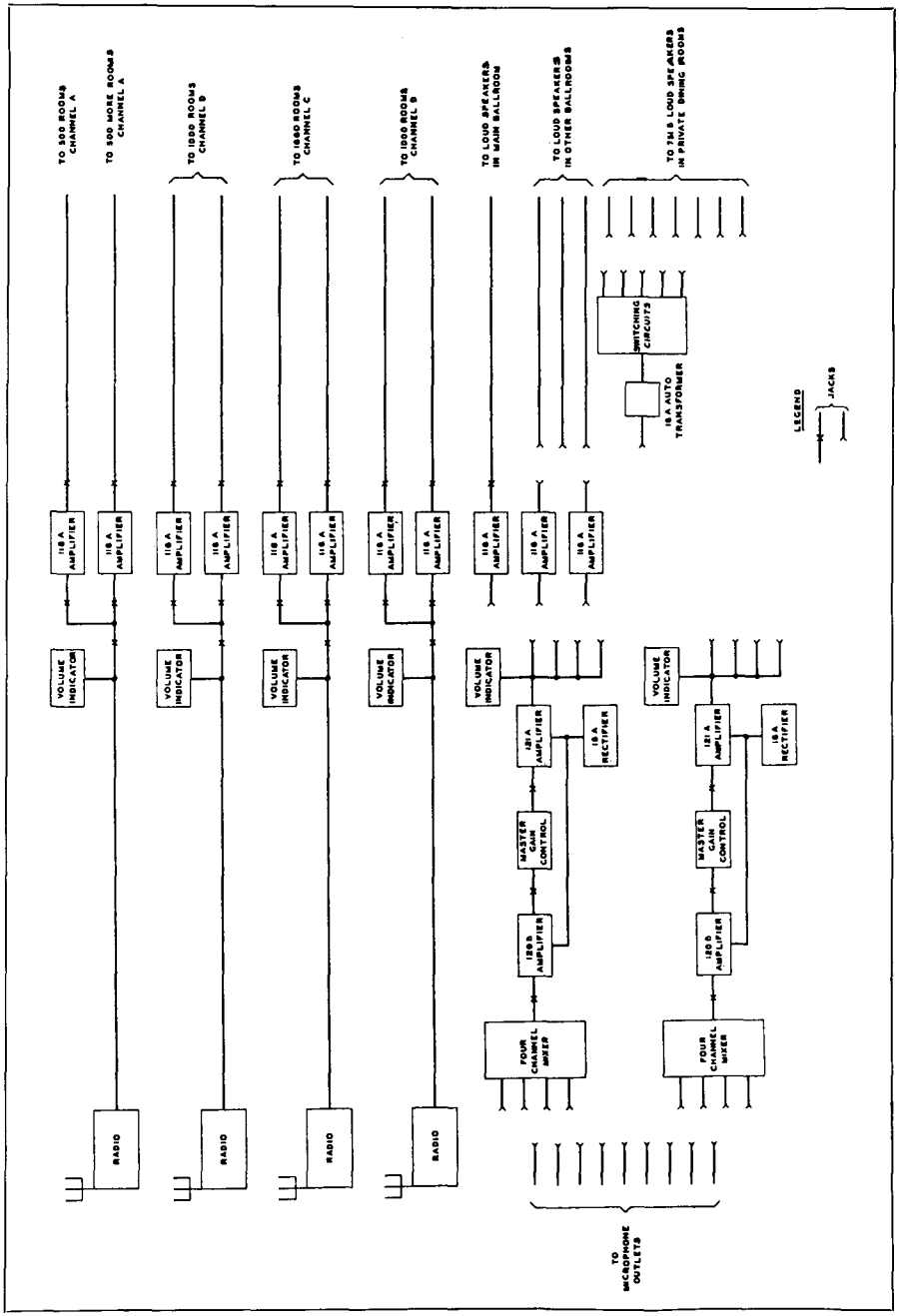

Fig. 22-6. Representative hotel sound system, having four radio channels.

may be used to cover large areas outdoors.

Hotel System

Fig. 22-6 shows the circuit of a typical sound system for a hotel. Four radio channels are provided for each of 1000 guest rooms, and two additional channels are included for local microphone pickup and for reproduction in ballrooms

and private dining rooms. A program picked up locally can be used instead of a radio to supply one of the guest room channels by using patching cords to bridge the 118A Amplifiers of the guest room channel across the output of one of the 121A Amplifiers.

The gain, noise, and volume indicator settings of any channel of this system can be computed in the same way as was done for the School System.

Guest Room Loudspeakers

A maximum of 500 guest room loudspeakers are operated from one 118A Amplifier of 50 watts power capacity. This allows one-tenth watt for each speaker, which is equivalent to a peak level of +20 dbm or a volume indicator level of +14 vu for each speaker. This level should be adequate with 751B Loudspeaking Telephones or with small loudspeakers of other manufacturers because high volume in hotel rooms is undesirable due to its disturbing effect in adjacent rooms.

It is sometimes desirable to use a few loudspeakers of higher volume on the guest room network to take care of large suites or of people who are hard-of-hearing. This may be accomplished by reducing the impedance of the high volume

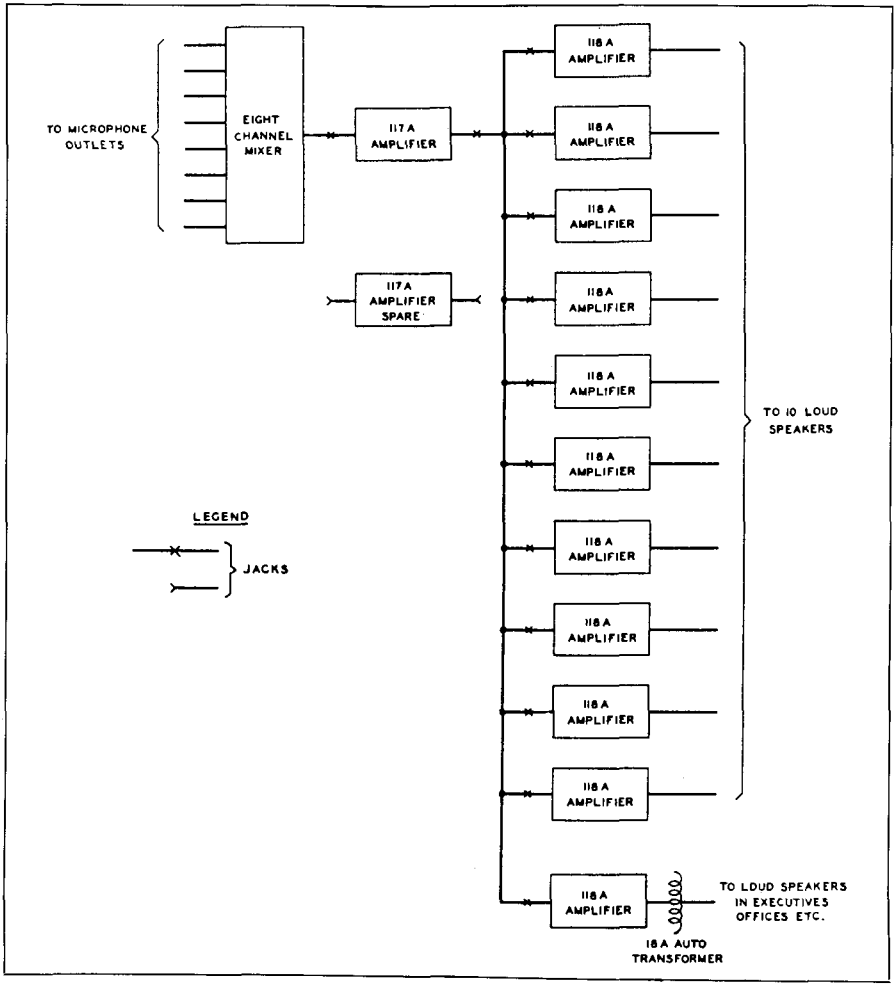

Fig. 22-7. Sound system for auditoriums requiring high levels.

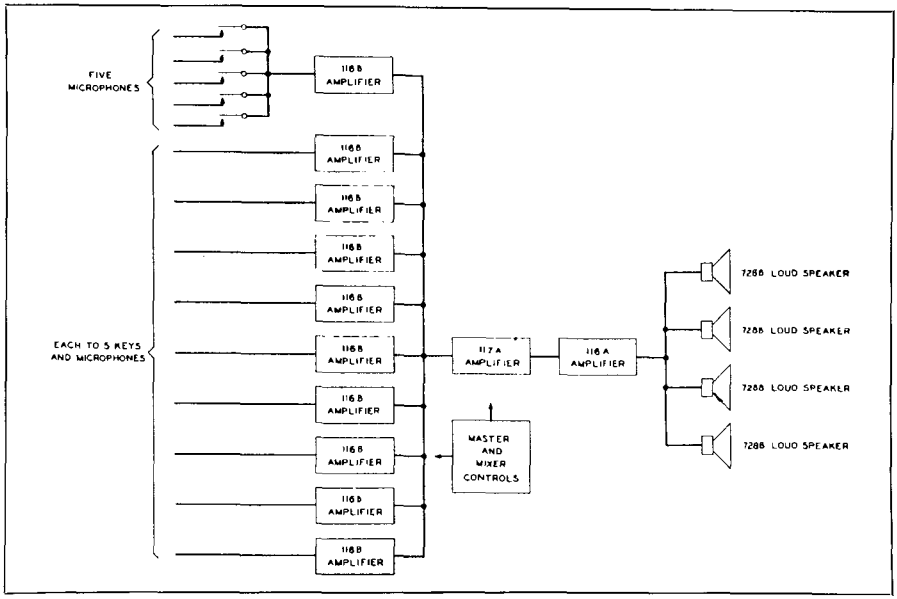

Fig. 22-8. Sound system for audio distribution at conventions, banquets, etc.

loudspeaker. If a special loudspeaker has one-tenth the impedance of a normal guest room loudspeaker, it will receive ten times the power from the amplifier, which increases by 10 db the level of the sound from the special loudspeaker. The number of special loudspeakers of this type which may be used is limited by the fact that the number of normal loudspeakers which may be used is reduced by ten every time one special loudspeaker of this type is added.

Auditorium System

Fig. 22-7 shows a system such as would be used in a large auditorium requiring high levels of speech and music.

The eight channel mixer is used to take care of stage shows where a number of microphones are sometimes needed simultaneously. This mixer may be the usual resistance network type or may be obtained by using eight 116B Amplifiers at the input of the 117A Amplifier.

Additional input sources to take care of programs coming over telephone lines or radio can be provided for by the use of additional 116B Amplifiers. Since a maximum of ten 116B Amplifiers can be associated with one 117A Amplifier, two extra input sources could be taken care of if eight 116B Amplifiers were used for the mixer, or nine extra input sources could be taken care of if the mixer were the resistance network type.

An extra 118A Amplifier is provided so that loudspeakers may be used in executive offices, lobbies and the control room.

Speech System Indoors

The system shown in Fig. 22-8 is intended for speech reenforcement at conventions, banquets, etc. For this type of use it provides a high quality system adequate for rooms or halls as large as several hundred thousand cubic feet.

The large number of microphones are spread out over the room so that anyone wishing to speak is within reach of one of them. An operator at a control desk in the front of the room turns on the microphone which is to be spoken into. In a system using such a large number of microphones it is desirable to use an arrangement of signal lights to tell the operator which microphone is to be used.

Having the microphones located around the room, sometimes directly in

front of a loudspeaker, will of course increase the singing tendencies of the system. If Cardioid Microphones are used, however, and not more than three or four are turned on at one time, good reenforcement will be possible without excessive singing trouble.

PA MOBILE UNIT

A mobile sound unit can be either a sideline, serving as a seasonal fill-in source of revenue for the local service technician, broadcast engineer, or ham; or it can be designed, constructed and operated as a genuine, year-round business venture.[1]

The amplifiers and program equipment are standard, commercially available units which may be readily removed from the truck for use on indoor assignments. Auxiliary devices are also made from standard components, adapted in simple fashion to a particular application.

[1]Epstein, L. J. "Sound on Wheels." Radio and Television News, Nov. 1950, p. 74.

A *Marmon-Harrington* Model DVL-4 (Indianapolis) truck is especially suitable for such work. Road clearance is only 14", and being a front wheel drive (60 hp. motor). The floor of the truck is completely flat since the customary propeller shaft is eliminated. There are 284 cubic feet of unobstructed loading space, with folding rear, side, and cab partition doors. The front half of the truck (cab) houses operating and control equipment, while the back portion holds the power supply, auxiliary, and emergency equipment as well as storage. With six forward speeds and two reverse, the truck can creep at speeds suitable for parade participation, or as a mobile reviewing stand.

Power Plant

Perhaps one of the outstanding features of this unit is its complete self-dependence for power, and its ability to adapt itself to a variety of changing situations. A 3 kva. gas-driven *Onan* Model W3S, ac power generator is capable not only of running a heavy load of electronic equipment, but will furnish spot and flood lamps, auxiliary lighting

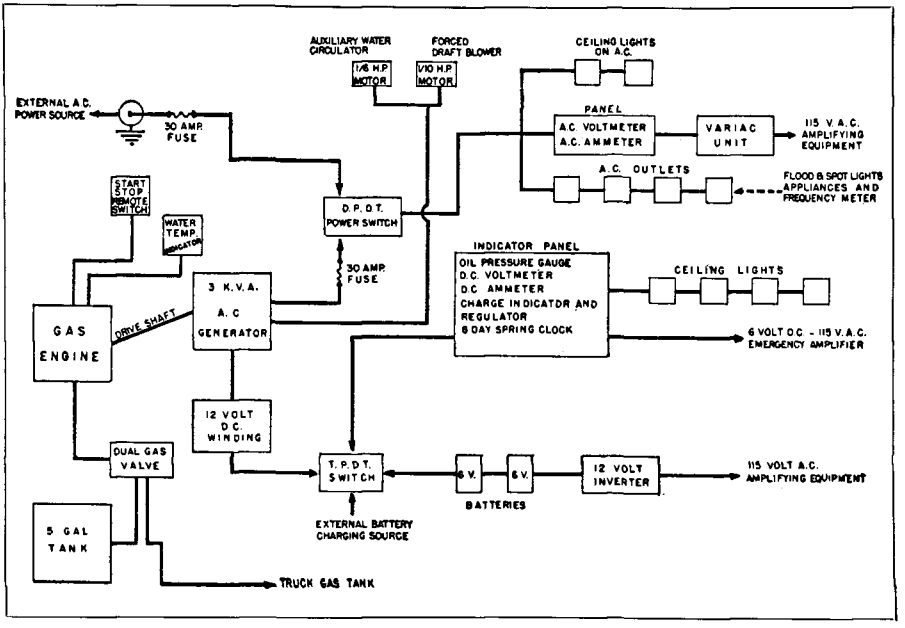

Fig. 22-9. Block diagram of mobile power plant and auxiliary equipment.

equipment and appliances at remote locations. Lawn parties, and grand openings of commercial enterprises are other examples of PA work as a consequence of power plant capacity and auxiliary lighting equipment.

Fig. 22-9 is a block diagram of the power plant and associated equipment. The generator is self-starting, operating from the two six-volt storage batteries through the remote control "start-stop" switch located in the cab near the operator. To check the operation of the power plant, a meter panel, located at the rear of the operator includes a 12 volt dc voltmeter, oil pressure gauge, dc ammeter, battery charge indicator and regulator, and, though not related, an eight-day clock. A water temperature indicator is mounted alongside the panel. The ac output of the generator is fed through a 30 ampere fuse to a *Cutler-Hammer* Model 00, C83-74 "quick make/break" d.p.d.t. handle-operated drum switch which ties the ac load of the unit to either the generator or an outside ac source. Whenever available, a line is run to the nearest commercial power outlet and fed to this selector switch through the lock-twist connector on the roof-top and through a 30 ampere fuse. Fuses used are the *Fusetron* delayed action type, so that momentary surge voltages will not interrupt service. Instant switchover is thus made possible should the commercial power at the source tapped fail because of excessive load. All ac lines are polarized and each outlet marked for "grounded" side. When an external power source is used, the grounded side is determined by the simple light bulb method (with one side to earth, the outlet is probed for the "hot" side which will cause the light to glow). This assures consistency in grounding of electronic equipment and reduction of static charges which otherwise have a tendency to build up, causing shocks and hum.

Distribution of Load

A number of ac outlets and some ceiling lights are then fed from the power switch. Across the output are an ac voltmeter and ammeter. These serve to check loading condition, should a limit be necessary as a consequence of using an external power source, or to check the load on the generator.

Some devices are fairly critical when it comes to ac operating voltage, while others (such as turntables and recorders) require fairly accurate and stable frequency. For these reasons the line which feeds the amplifiers, turntables, and recorders first goes through a heavy duty *variac* unit, with an output voltage indicating meter. A *J.B.T.* frequency meter is used to check the line, and should power be coming from the generator unit, the frequency can be adjusted for a given load by a knob control which governs the driver engine speed.

Muffling Generator Noise

Since announcements, as well as recordings, are often made in the cab, it is necessary to soundproof the cab and as much of the truck as possible. The easiest way to do this is to enclose the generator in a compartment lined with ¾" *Celotex* and finish with pressed board. A 1/10 hp. electric motor with an 18" bucket blade is installed at the front of a ventilating enclosure.

Should additional cooling become necessary, there is an auxiliary water-circulating centrifugal pump, driven by a 1/16 hp. electric motor, also deriving its power from the generator output, which is turned on from the cab. The gas engine uses a thermo-syphon water cooling system which depends upon water temperature for circulation. The pump produces circulation before permitting the water to reach the critical temperature, thus maintaining a low average water temperature.

Emergency Source

A twelve volt *ATR* inverter is ready to swing into action should both ac power sources fail. The inverter is run off the same two 6-volt batteries which are used to start the generator engine. When the engine operates, it automatically charges

these batteries from a secondary winding on the generator which delivers 12 volts. A t.p.d.t. knife switch provides various arrangements whereby the batteries may be charged from the generator or an outside source, used to start up the generator, or six volts tapped for direct operation of a 30 watt emergency amplifier, in case the two ac power sources *and* the 12 volt inverter fail!

Loudspeakers

Four *University* LH trumpets and SAHF driver units mount at the truck corners, and *University Cobra-12* wide angle speakers cover the mid-sections. When used with large trumpets the Cobra-12 adds to the crispness and penetrating qualities of the over-all reproduction, as well as to fill in voids. Operation is set at 360° coverage. 180° coverage, at full strength, is accomplished by simply directing the two front LH trumpets straight forward and turning the two rear trumpets to face fore and aft, favoring the working side by about 15°.

The trumpets are mounted to the rooftop by a single bolt through the center hole of the "U" bracket, thus permitting simple adjustment of the trumpet direction. Vertical adjustment of the trumpets and Cobra-12, are, of course, also possible, so that the "throw" may be fixed as required. Vertical adjustment should be made to suit the size of the audience (working area) anticipated, directing the speaker axis to a point approximately ⅔ of the distance to be covered. Lines are brought into the cab by means of *Amphenol* feedthrough connectors, directly alongside the speakers.

As protection against lightning, the lines from remote loudspeakers, when used, go first to a lightning arrester before entering the truck. When external ac is used, the truck serves as ground, through the grounded side of the ac. When the power plant is used, a ground stake is driven into earth or a line run to any nearby grounded metallic object.

Fig. 22-10 illustrates several common methods of positioning loudspeakers on

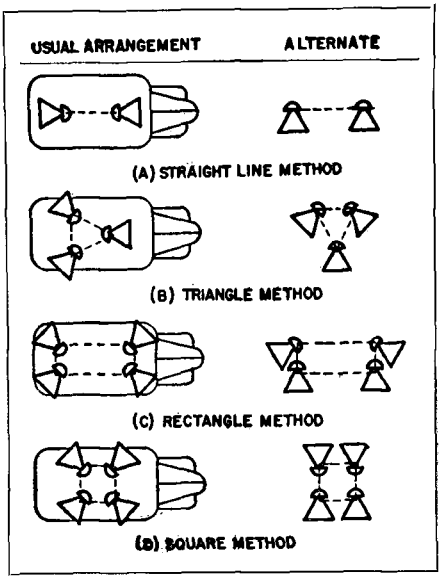

Fig. 22-10. Several common methods for positioning loudspeakers on a mobile sound truck.

mobile units. They provide a degree of necessary flexibility and may be used for most soundcasting applications. The more speakers used to cover a given area, the higher will be the sound pressure at any one point. For example, alternate method "C" will produce more sound for a 180° angle of dispersion than will alternate method "B." "B," of course, is obviously superior to "A."

Method "D" for 360° coverage is better than "C" because a more uniformly distributed sound pressure will result, but "C" will do a better job when only 180° coverage is required.

Method "B" is obviously a compromise between the two- and four-speaker systems. It will perform well for both 360° and 180° requirements.

More elaborate speaker layouts are sometimes used, but more often than not they are designed to increase distance covering ability and to cope with special vertical propagation problems. Dispersion angle and low frequency cut-off ratings of projectors are an important factor in deciding which system should be used. These ratings are directly related to the length, flare, and mouth di-

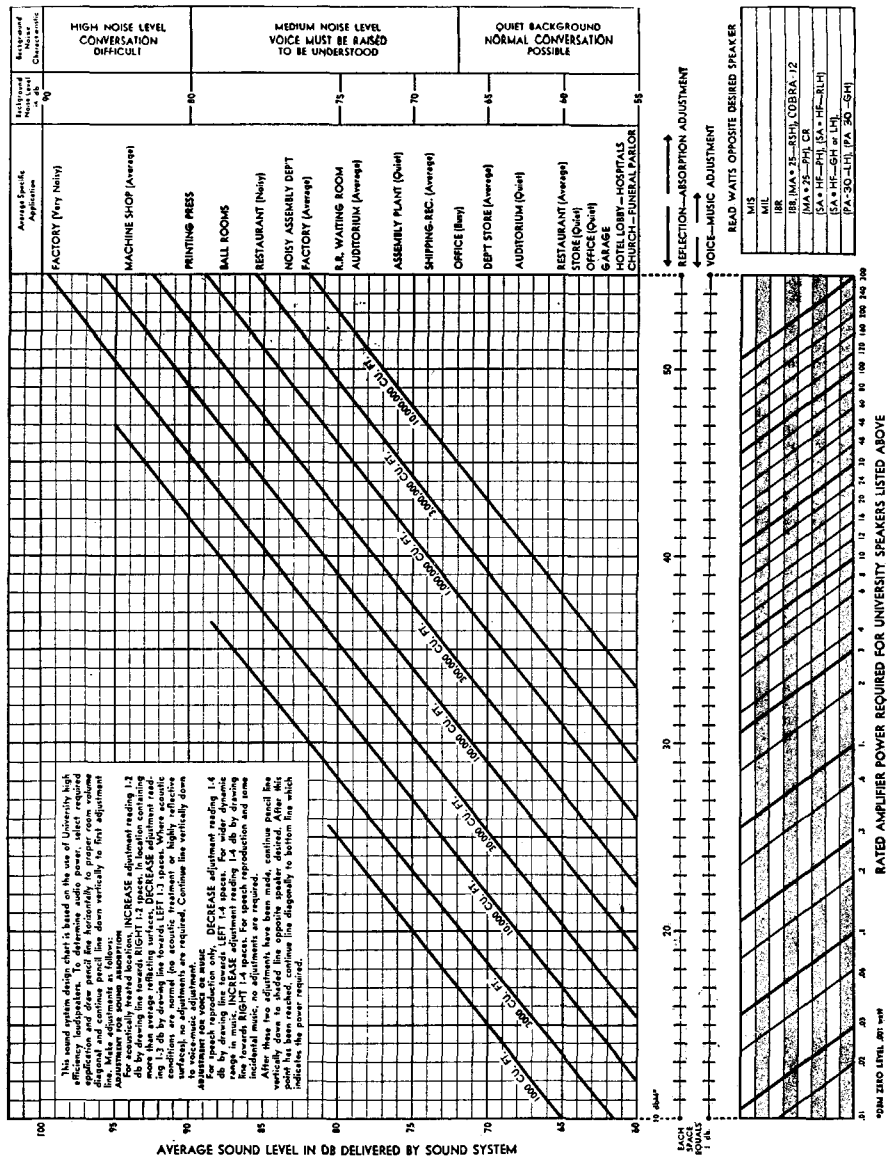

Fig. 22-11. Sound system design chart. Although designed specifically for University loudspeakers, it may be used with equivalent units. (Courtesy University)

ameter of the projector. Contrary to what one might normally expect, the shorter, smaller trumpets have a wider dispersion angle than the larger projectors. Low frequency cut-off, a function of air column length and horn size, is lower for the larger projectors than for the small ones. Thus, there evolves a paradoxical situation where we must tolerate narrow dispersion angles for large projectors in order to obtain greater fidelity, while dispersion from the smaller trumpets, which have limited low frequency response, is relatively wide.

Power Requirements

"How much power do I need?" is perhaps the most often heard question in this business. Much has been written regarding the subject, with the answer invariably being, "It all depends!" This goes without saying, but most successful sound trucks have been able to do a decent job with a good 60 watt amplifier and some topnotch loudspeakers. Fig. 22-11 is a chart which may be used for any type indoor or outdoor sound installation. Generally speaking, the sound pressure at any one point in an area covered, should not be less than 6 db. over the level of ambient noise reaching the same point. A leeway of 10-15 db. is preferable. The nature of the interfering noise will determine the level difference necessary. Adjustment of the frequency response of the system, using the amplifier tone controls, can be quite effective. Noise containing a heavy amount of the audio spectrum reproduced in the program material will tend to mask out the desired signal as it arrives at the listener's position. Reducing the affected range and boosting the unaffected bands (using the amplifier treble and bass controls) sometimes assists in reducing the "apparent" distortion or interference of the noise.

Amplifiers

Three amplifiers are aboard the sound truck described. One is a 60 watt *Rauland* W-861 which is the main unit. It is mounted in a metal cabinet together with a 30 watt *Rauland* W-835-A which serves as both an alternate and a standby unit. These amplifiers operate from 115 volts ac only, and are located directly to the right of the operator. A third 30 watt amplifier is located just above the power plant and 12 volt inverter. It is a dual voltage unit capable of operating from either 115 volts ac or directly off 6 volts dc. Four microphone and two phono inputs (all high impedance) are provided by each amplifier, as well as a three position microphone remote control receptacle. The usual complement of tone, microphone, and volume controls are provided and are available to the operator. All the input and output connections of both amplifiers are run to a 12-gang, cam-operated, single-circuit, double-throw *G-E* switch assembly (CR1070-E105) which, at the flip of the handle, throws either one of the amplifiers into the operating circuit.

So that warm-up delay may be eliminated, the ground return lead of the amplifier power transformer's high voltage winding center tap is brought out from each amplifier to a section of the switch. The filaments of the standby unit remain lit, and the amplifier goes immediately into action as its high voltage ("B—") is returned to "ground."

The turntables and recorders are located atop the engine housing and the amplifier cabinet is directly alongside. The outside microphone and speaker connections feed from the roof-top connectors to the overhead glove compartment and down to the switch panel, Fig. 22-12. The tuner output is also routed through the glove compartment which serves as a storage place for program input cables arriving from various points of the truck.

Tuner

The tuner is flush mounted on the right side of the cab back wall. A monitor speaker is provided for tuning and monitoring. If announcements are being made from the cab, earphones are used in place of the speaker. Normally, the tuner output, when used, is channeled to one of the "phono" inputs of the PA amplifier. However, it is also possible to use the tuner independently of the PA system to record a special program off the air onto one of the wire recorders for playback through the PA system later on.

Recorders

Two one-hour capacity wire recorders are used. Here again it is necessary to improvise to feed the proper level and impedance from the amplifier to the high impedance recorder inputs, in order to record the program going out through the PA system. The recorder inputs are paralleled so that if the program being

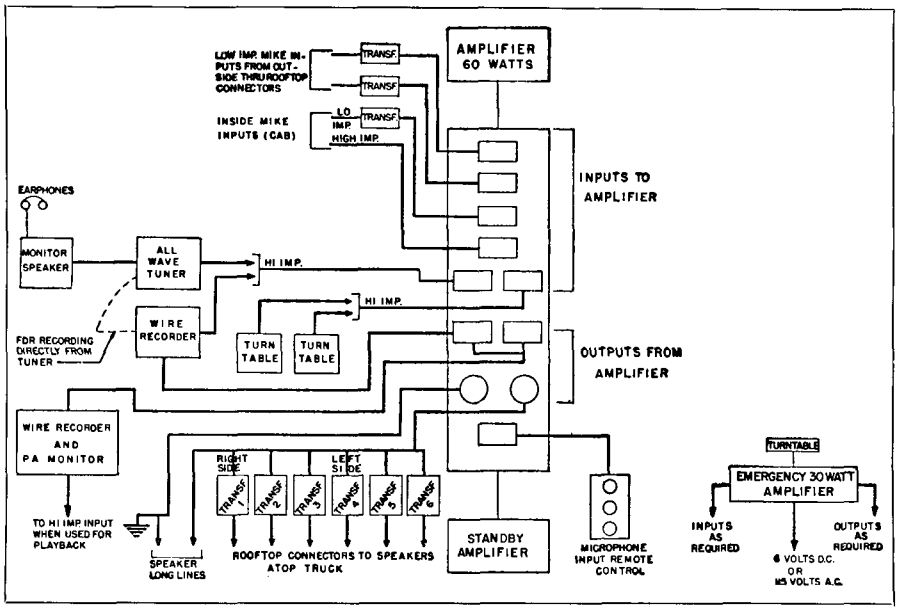

Fig. 22-12. Block diagram of instantaneous switching panel and associated truck equipment.

recorded exceeds one hour, it may be immediately picked up by the second unit. Where a recording is especially important, both units may be used simultaneously as a safeguard against possible trouble with one of the recorders. Normal procedure is to use the playback system of one of the recorders to monitor the output of the PA system, while the other unit is prepared and ready to record should some unusual occurrence dictate its immediate use.

For playback, the high impedance outputs of the recorders are fed to either one of the "phono" inputs to the amplifier.

Turntables

Two turntables are available. One is a *Garrard* 78 rpm intermix, the other a 78 rpm manual. Both units have adjustable speed controls. Although 45 and 33⅓ rpm equipment could be used, the lightweight pickups which are required will usually be found impractical for use in a moving vibrating truck.

Quite often, only certain passages of a record are to be played. Chalk marks serve as effective starting cues. Stopping the program instantly in a vibrating truck, without resorting to changing volume control settings, is accomplished quite simply by incorporating a pickup shorting switch (push-button type) on the turntable base. Output cuts off instantly at precisely the desired points, allowing the pickup to be removed from the record at will.

A third turntable is available. It is part of the dual voltage 30-watt emergency amplifier and may be operated in place of the 115 volt ac units in case of ac power failure.

Microphones

Various type microphones are available for both close-talking and omnidirectional applications. A high impedance crystal microphone is used for cab announcements, all other hand and floor types being low impedance units. The inputs to the amplifiers are high impedance, but *Amperite* LGP low-to-high impedance line transformers precede the first three input channels so that low impedance mikes may be used. Thus, whether the microphones are situated

next to or atop the truck, or several hundred feet away, the low impedance lines will assure low loss.

Field Telephone

A battery-operated field telephone is a useful adjunct to any sound truck to direct set-up operations. With an observer stationed at the far reaches of the area to be observed, loudspeaker direction and "throw" can be adjusted, as well as amplifier volume and tone control settings. For shows, reviews, concerts, it may also be used for cueing purposes.

SYSTEMS FOR CHURCH TOWERS

The essentials of a church steeple sound distribution system are a record player, an amplifier and outdoor loudspeakers. In view of the thousands of people who will listen and pass judgment on the quality of music, there should be no compromise in the quality of the individual components. Since chime and bell music have high audio peaks, the amplifiers and loudspeakers should have ample reserve power. Separate bass and treble controls should be incorporated in the amplifier to permit any desired degree of tonal range.

The response characteristics of horns and driver units should be carefully checked to insure a proper degree of low frequency reproduction. Attention to these important details will result in a quality of amplified music above criticism by the most discriminating listener.

Special chime records are available in which excellent recordings have been made of very fine chime numbers such as Notre Dame, St. Peters, University of Chicago Chapel, St. Paul Cathedral of New York, etc. These records are ideal and will give perfect reproduction. For best results records of this type should be played individually on a manual record player rather than an automatic recorder changer. The motor must have exceptionally uniform speed, as slight irregularities in speed will result in a "wow" or momentary change in pitch which is extremely objectionable during musical numbers. The motor should be

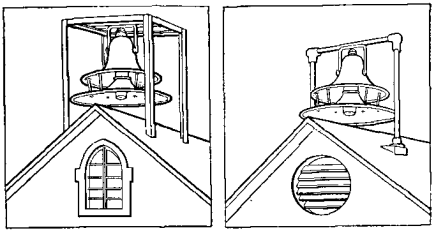

Fig. 22-13. Methods for mounting loudspeakers on churches having no tower or belfry. (Courtesy University)

mechanically insulated by means of shock absorbing rubber cushions or springs so that the motor vibrations are not transmitted to the motorboard and thus to the pickup arm. A light weight pickup, carefully checked for needle scratch, should be used in conjunction with a good transcription type motor. Too much emphasis cannot be placed on the careful choice of motor and pickup.

Loudspeaker Locations

Where churches have towers, the upper ventilation windows may be used for mounting the speakers. For churches having no towers, the speakers may be placed in the opening of the parapet where the bell is usually located or a simple framework may be fabricated for roof mounting the speakers. See Fig. 22-13.

Loudspeaker Requirements

Loudspeakers must be of the outdoor type of heavy gauge metal construction. Corrosion resistant finishes on both horns and hardware are essential to permit withstanding any degree of exposure, such as wind, rain and snow. Driver units should be of the permanent magnet type and in addition to possessing good low frequency response, should provide high conversion efficiency to permit economical choice of an amplifier. The diaphragm material must be immune to sudden changes in temperature and humidity and have a high fatigue characteristic. The entire driver unit assembly should be enclosed in an hermetically sealed housing.

A variety of trumpets and driver units are available for every type of installation. Where extreme distance is not a factor, the *University* model *RLH radial reflex trumpet with a PAH driver unit* will provide excellent 360° distribution. Power up to 50 watts may be obtained by using a 2 YC connector with two PAH units. For systems requiring greater radius coverage, the models LH or GH Trumpets *with PAH driver units* are the solution. These may be installed in the belfry and the quantity will depend on the number of directions to be covered. Four speakers will usually be necessary to provide 360° distribution. The 2YC connector may also be used with two driver units for each trumpet for concentrated sound power. Where exceptionally fine low frequency response is desired, the model GH trumpet with PAH unit is used.

Many churches may wish to invest in systems where reliable sound distribution a mile or more is important. The *University 4A4* super power loudspeaker is ideal for this purpose. Small and compact for easy installation, this speaker is capable of excellent response and can be heard at long distances. Where certain installations may require greater radius coverage in one direction than another, the model 4A4 may be combined with a number of LH or GH trumpets to provide the required sound distribution.

Typical Church Tower Installation

Fig. 22-14 is representative of a typical and economical type of church steeple installation. Consisting of a 35-50 watt amplifier, turntable and 360° radial speaker with two driver units, it is capable under average noise conditions of covering an area approximately one quarter mile in diameter.

In churches where the amplifier is located within a radius of 50 feet of the chime cabinet, a good quality high impedance crystal or dynamic microphone will prove satisfactory. The cable must be shielded to prevent hum pickup and extraneous electrical noises. An over-all outer insulating cover of rubber will provide the necessary mechanical protection and eliminate rustling and scraping noises from the loudspeakers as a result of the shield rubbing against metallic objects.

Where microphone cable length exceeds 50 feet, loss in output or frequency discrimination will occur due to the capacitative effects of the shielding. A much better practice is to employ a low impedance dynamic microphone (50-200) ohms which will permit long cable runs with a minimum loss of output and attenuation of high frequencies. If the amplifier does not incorporate a low impedance input, a cable type matching transformer may be employed. The same cable precautions as outlined under high impedance microphones must be observed.

If it is necessary to provide a microphone for use at the pulpit, for sound reenforcement within the church, an additional microphone input stage should be provided. An alternate method could be devised by using the chime cabinet microphone input for both purposes. A simple switching arrangement in the amplifier could connect either microphone to

Outdoor Loudspeaker Power Requirements

Speaker	Driver Unit	Power	Sound Distribution
RLH	PAH	20-25 watts per driver unit	⅛-¼ mile
RLH	2-PAH		
LH or GH	PAH		
LH or GH	2-PAH		¼-½ mile
4A4	4-PAH		1 mile

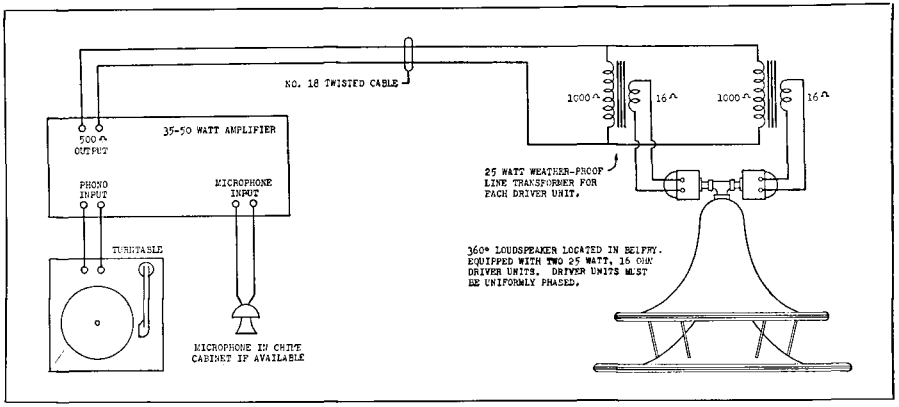

Fig. 22-14. A typical church steeple installation. (Courtesy University)

the common input, since at no times would the chimes and pulpit microphones be operated simultaneously. A similar type of switch could transfer the amplifier output to either the outdoor projectors or the indoor sound re-enforcement speakers.

Note that although line matching transformers have been specified, their need will depend on the length of transmission line required. In general, where the distance between the amplifier and loudspeakers is less than two hundred feet, lines run at voice coil impedances are satisfactory, provided sufficiently heavy cable is employed to minimize line losses. Table I indicates the wire sizes required for a given length of line (2 wires) at various voice coil impedances. Wire sizes and lengths in this table are calculated for a power loss of 15%.

Wire Size	*Load Impedance*		
(B & S)	*4 Ohms*	*8 Ohms*	*16 Ohms*
14	125′	250′	450′
16	75′	150′	300′
18	50′	100′	200′
20	25′	50′	100′

Table I. Maximum Length of line for 15% Power Loss—Low Impedance Lines.

As an example, in an installation where the distance from the speaker is approximately 150′, the two 16 ohm driver units may be paralleled for a total impedance of 8 ohms and connected directly to the 8 ohm output tap of the amplifier, dispensing with the line matching transformers entirely. A transmission line consisting of a pair of No. 16 B & S conductors would then be required to keep within the permissible 15% power loss.

In installations where the distance between speakers and the amplifier is greater than that indicated for a given wire size, or where a lower power loss than 15% is required, it is preferable to work at higher impedances. High impedance lines normally run from output transformer impedances of 125-600 ohms to impedance matching transformers. The impedance matching transformers in turn match the line impedance to the various voice coil impedances.

A table of wire sizes and lengths of transmission line (2 wires) for various line impedance is given in Table II. Since high impedance lines require matching transformers which in themselves possess inherent losses, all calculations in this table are based on a line power loss of 5%.

A word of caution with respect to driver units. To insure long life and fool proof operation, it is essential that the low frequency response of each loudspeaker be carefully controlled. As an

Wire Size (B & S)	Load Impedance		
	100 Ohms	250 Ohms	500 Ohms
14	1000′	2500′	5000′
16	750′	1500′	3000′
18	400′	1000′	2000′
20	250′	750′	1500′

Table II. Maximum length of Line for 5% Power Loss—High Impedance Lines.

example, where a trumpet and driver unit have a low frequency cut-off of 120 cycles, feeding a signal at a frequency lower than cut-off will result in excessive diaphragm movement due to insufficient loading at this frequency. Although the unit may not fail entirely, distortion and rattle will result. It is important therefore, to control bass response within the cut-off limits of the loudspeaker.

Many churches wishing to install amplified sound systems may have delayed purchase due to the lack of a steeple for speaker placement. A simple solution is the fabrication of a framework for roof mounting similar to the ones illustrated in Fig. 22-13. Built of 2″ angle iron or standard pipe and finished with a few coats of anti-corrosion paint, it should provide lasting satisfaction at a relatively low cost.

100 Watt Church Tower Installation

The 75-100 watt system shown in Fig. 22-15 is basically the same as the one previously discussed. However, it includes a number of additional features which merit attention. Hourly chimes are provided by a chime type electric clock such as manufactured by *General Electric* and *Telechron*. Hourly ON-OFF operation of the amplifier is accomplished automatically by an electric time clock which can be set to turn on the amplifier 5 minutes before the hour and turn it off upon completion of the hourly chimes.

Where additional microphone inputs are required, they may be built in or modifications of existing inputs may be made as described above. Precautions regarding low and high impedance transmission lines, microphone shielding, etc., are equally applicable to Fig. 22-15. Again, where transmission lines are relatively short, the 16 ohm driver units may be paralleled for a total impedance of 4 ohms and connected directly to the 4 ohm output tap of the amplifier.

However, the use of individual line matching transformers will prove invaluable for installations where unequal power distribution is required. Situations of this type arise where intervening buildings may cause an obstruction, necessitating an increase or decrease in sound level in a particular direction or where for reasons of its own, the church

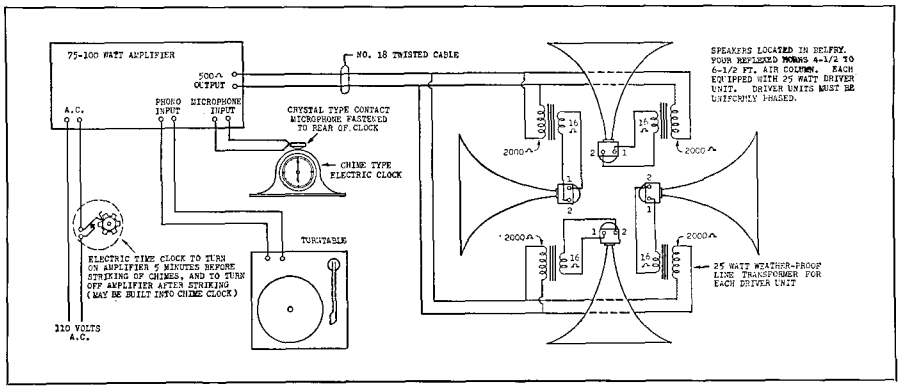

Fig. 22-15. A 75-100 watt church steeple installation. (Courtesy University)

may desire wider coverage over certain areas than others. Although it is possible to wire speakers at voice coil impedances for unequal power distribution, this method lacks flexibility and usually involves wiring a portion of the speakers in series or series parallel. Series connections are to be avoided, since if one unit fails, all the speakers in a particular bank become inoperative. Line matching transformers provide the simplest, and most accurate method for obtaining predetermined power levels.

Unequal power distribution may be accomplished by arranging the impedances of individual loads in such a manner that their total impedance properly matches the source impedance. The method outlined below is accurate and simple and once used, may be easily memorized. A typical installation involving a number of speakers operating at different power levels is used as an example:

Problem—Typical Church Steeple Sound Installation

To connect 4 speakers to an amplifier so that two speakers receive 20 watts each, one receives 10 watts and one receives 5 watts.

Solution:

1. Assume the amplifier output impedance is 500 ohms.
2. Total power requirements are 55 watts, (2 x 20) + (1 x 10) + (1 x 5)
   NOTE: *Although total power requirements are 55 watts, sufficient reserve should be provided as a safety measure and a 75 watt amplifier is suggested. However, all calculations should be based on the actual power requirements (55 watts); any necessary adjustments in output level can be made at the amplifier.*
3. Obtain the ratio between the total power required and the power required for the 20 watt speakers, i.e., 55/20 = 2.75:1.
4. Obtain the ratio between the total power required and the power required for the 10 watt speaker, i.e., 55/10 = 5.5:1.
5. Obtain the ratio between total power required and the power required for the 5 watt speaker, i.e., 55/5 = 11:1.
6. Since the derived ratios indicate the relationship between required impedance and line impedance to effect the necessary transfer of power, multiplying 500 ohms (line impedance) x 2.75 will give us the primary impedance for each of the matching transformers for the 20 watt speakers, i.e., 1375 ohms. Similarily, the 10 watt speaker would require an impedance of 2750 ohms (500 ohms x 5.5) and the 5 watt speaker, 5500 ohms (500 ohms x 11).

A table similar to the one below will greatly facilitate solving any speaker distribution problem where unequal amounts of power are required for a number of speakers.

Although a line impedance of 500 ohms was chosen in the above example, in practice, any high impedance from 125 to 600 ohms may be utilized. Since the selected line impedance will bear a direct relation to the final calculations, the

Line Impedance 500 Ohms (Amplifier Output Tap)

No. Speakers	*Total Power*	*Ratio*	*Calculated Impedance*
2-20 watt		55/20 = 2.75:1	500 x 2.75 = 1375 ohms for each 20 w. speaker
1-10 watt	55 watts	55/10 = 5.5:1	500 x 5.5 = 2750 ohms for each 10 w. speaker
1-5 watt		55/5 = 11:1	500 x 11 = 5500 ohms for each 5 w. speaker

choice should be based on the types of transformers available. If in the above problem a 250 ohm line was used, all derived values would have been halved. After all calculations for determing the primary impedance of an impedance matching transformer which will deliver the required power are completed, the following condition must be observed:

a. Each impedance matching transformer secondary must be terminated by an equivalent speaker load.

NOTE: The general solution presented above is correct for any installation regardless of size. Simply set up a similar table using the data of the required installation and the correct impedances will be obtained.

Phasing

Phasing is concerned with the utilization of two or more loudspeakers in such a way that the sound from any one speaker does not cancel the sound from other speakers, resulting in materially reduced sound output. This is an important consideration where speakers face the same direction. The connections to the voice coil, whether in series or parallel, must be made in such a manner that at any instant the diaphragms are in the same position. That is, all diaphragms must be moving outward at any instant or moving inward at any instant.

Where driver units are wired in-phase, the sound from the driver units will reinforce each other and provide correct operation. This means that the like terminals of each unit must be connected together for electrical parallel operation, and if the speakers are wired in series, two unlike terminals must be used as a junction.

Phasing is of least importance where loudspeakers are pointing in opposite directions in an outdoor area. However, when installed indoors as two speakers are brought closer together in a smaller angular relationship, the necessity for in-phase operation becomes increasingly important.

Power Overload and Protection

Breakdown of the driver unit in the field is usually the result of power overloading. The explanation for such failure lies in the fact that an amplifier normally rated for 25 watts is capable of peak power or transient powers considerably greater than the nominal rating. A 25 watt amplifier may frequently reach peaks of 50 watts or more, lasting for a few milliseconds. Such power peaks occur during musical passages, or when a speaker raises his voice for emphasis, or suddenly draws too close to the microphone. It is these unusually high power transients which result in breakdown of the unit.

Where amplifiers must be operated at full output power it is desirable that the amplifier be equipped with a peak limiter or volume compressor. Such compressing devices must be capable of rapid response. Filters or time-delay elements in the compressor circuit should be capable of action close to the cut off frequency of the loudspeaker horn. Generally a time-constant of .005-.01 seconds would be satisfactory.

Low Frequency Overload

Another contributing cause of driver unit failure is due to high-powered operation at frequencies below the cut-off of the horn, or by the attempt to obtain increased low frequency output by means of "bass boost" on the amplifiers. Since low frequencies result in extreme diaphragm movements, it is apparent that the diaphragm and lead wires may be overstressed under low frequency impulses, especially when these are acoustically undamped due to insufficient air column of the horn. While the power ratings of PA trumpets are usually conservative and provide for a reasonable safety factor, the attempt by the user to obtain more bass response by the "Bass Boost" control on his amplifier may cause failure of the driver unit. This is especially true when deep organ music or heavy low frequencies are reproduced at full power with an amplifier that has low frequency emphasis.

A mere 3 db boost in bass on the amplifier control, while barely discernable to the ear, will double the low frequency power relative to those frequencies in the "flat" range. Thus while the user will assume that he has about 25 watts turned up because he is judging by the predominance of the middle frequencies, a bass note occuring in occasional musical passages may deliver 50 watts to the driver. If this occurs at a frequency below the cut-off of the horn, the driver unit is endangered. For reliable operation, the response of the amplifier should be flat to the horn cut-off frequency. In horn-type loudspeakers which must operate at full power, it is poor practice to attempt to increase the low frequency output by raising the bass response of the amplifier. The proper procedure is to utilize a longer horn.

Series vs. Parallel Operation

The operation of a cluster of loudspeakers with series connection is not recommended. High transient voltages may be great enough to cause arc-over in the air gap. For this reason, it is desirable to place all driver units which are grouped at one location in parallel, and then matching by means of a suitable transformer to the desired line impedance.

Where it is difficult to utilize parallel connection because of transformer matching problems, series operation may be used providing each speaker is electrically insulated from the adjoining speaker. This could be achieved by installing the speaker cluster on a 2 x 4 base or other wood support so that there is no metallic connection between each loudspeaker bracket.

It is little appreciated that the voltage across a driver unit may suddenly rise to many times the normal rated value. During a transient period lasting for a few milli-seconds, a 25 watt unit (which should have a maximum of 20 volts across it) may experience a momentary surge of 75 or more volts. Thus, when 4 or 6 driver units are wired in series the total surge voltage may be several hundred, thus causing breakdown across the magnetic gap, i.e., between voice coil winding and the pot of the units at each end of the series circuit. However, if the individual loudspeaker horns or brackets are electrically insulated from each other, then series operation of the driver units is practical.

Multi-speaker Installation Precautions

In installations where a number of driver units are connected in parallel and which are required to be operated close to their maximum handling capacity, it has been the experience of many technicians that when a unit fails because of excessive power, then the remaining units in the circuit may break down shortly thereafter, because of the increased power they receive.

For instance, when two 25-watt loudspeakers are connected in parallel to a 50-watt amplifier, and one of the speakers breaks down for one of the abovementioned reasons, then the remaining unit will immediately be required to handle considerably more than its intended share of the power, and breakdown will possibly follow. This is especially true where the impedance match is closer to that of a single speaker, or where the output regulation of the amplifier is such as to result in a disproportionate output with this mis-match. It is a wise practice to specify an amplifying system, wherein the speakers are incapable of receiving more than 75% of their rated power.

To minimize the possibility of loudspeaker breakdown, we are describing several methods which will afford either protection to the speakers, or continuation of operation of remaining speakers where one or more open up.

Overload Protection of Loudspeakers

Method I:

This is a method, involving additional driver units, wherein each operates at 50% of its capacity, yet realizing the required maximum sound intensity. Positive prevention against breakdown where a power of 25 watts must be sup-

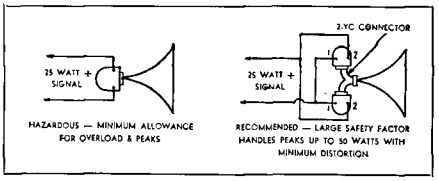

Fig. 22-16. A simple means for protecting driver units from overload. (Courtesy University)

plied to a single horn, is to equip each horn with two driver units, using a 2-YC connection, each end of the connector fitted with a driver unit. Thus, each driver unit receives approximately 12½ watts of electrical power, but the acoustic energy at the horn mouth is equivalent to that furnished from a single unit operating at 25 watts. The safety factor is increased many times in this type of installation and it may be considered as practically breakdown proof. (See Fig. 22-16.)

Method II:

Connect all driver units in series or series-parallel and shunt each driver unit with a fixed resistance of approximately three times the impedance of the unit. (See Fig. 22-17.) For instance, 8-ohm units would be shunted with a 25-ohm resistor. A 15 or 16-ohm driver unit should be shunted with a 50-ohm resistor. These shunt resistors will cause a loss in sound pressure of about 1½ db. This loss may be loverlooked as it is not apparent to the average ear. The wattage dissipation capabilities of the resistor should be equal to the maximum handling capacity of the driver unit. This method prevents failure of the entire system should a single driver unit open as would be the case where the series arrangement was installed without the shunt resistors. Should a unit of 15 ohms break down and become open-circuited, a 50 ohm resistor takes its place, thus considerably lowering the energy in the remaining speakers. This usually results in a reduced sound output which becomes apparent to the operator, warning him that something has gone amiss. However, the loss in volume is not sufficient to seriously impair the service for a temporary period.

Method III:

The use of so-called "grasshopper fuses" in conjunction with each driver unit, whether series or parallel connection is employed. These "grasshopper fuses" are used extensively by the telephone company. In the case of a 15-ohm, 25-watt driver unit, the fusing current of the fuse should be not over 1¼ amperes. By selecting a fuse with a rating around 1 ampere, a protection is afforded against the breakdown of the unit. A fuse of such capacity as to blow at say 20 watts, will automatically remove the driver unit out of the circuit. However, in such cases the fuse must be replaced before operation of the particular unit can be restored. The diagram (Fig. 22-18) illustrates a method of connecting these fuses. When a fuse blows a contact arm is released shunting a 15-ohm resistor in place of the voice coil. Such fuses are cheap and may be purchased from the *Graybar Electric Company.*

Method IV:

This method utilizes ordinary fuses and affords protection against breakdown, allowing the speaker to remain in operation. Whenever the signal current

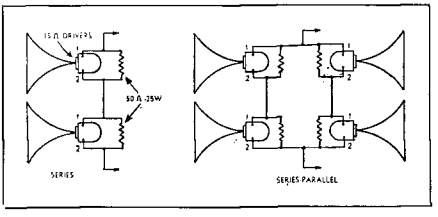

Fig. 22-17. Another method for the protection of driver units. (Courtesy University)

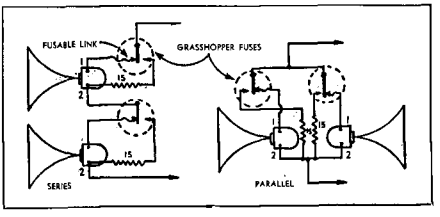

Fig. 22-18. The use of "grasshopper fuses" as a protection device. (Courtesy University)

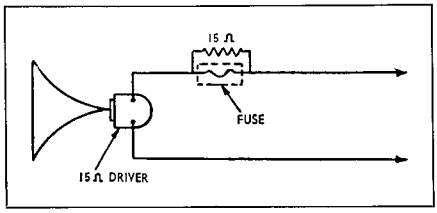

Fig. 22-19. Protective fuses permit speaker to operate when fuses blow. (Courtesy University)

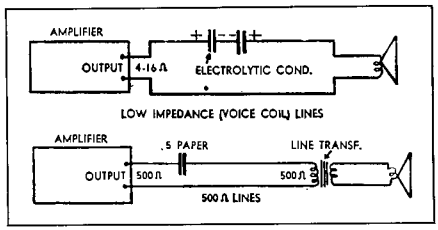

Fig. 22-20. How capacitors may be used for driver protection. (Courtesy University)

becomes excessive, the fuse blows, the power to the driver unit is automatically reduced, and the amplifier power is divided equally into the loudspeaker and a fixed resistance. The speaker continues to function at a 3 db lower sound level. This method utilizes low current "*Littlefuses,*" placed in series with each driver unit. Across each fuse is shunted a fixed resistor equal in resistance and power to that of the loudspeaker. The current rating of the fuse is selected on the basis of the peak current encountered in the average musical or speech output, where the averaged level is equivalent to the loudspeaker rating. In the case of a 25-watt loudspeaker, the current rating of the fuse should be approximately .75 ampere when shunted with a 15-ohm resistor. (See Fig. 22-19.)

Method V:

As a suggestion for keeping low frequencies and explosive sounds out of the loudspeaker, the following steps may be taken:

(A) Avoid close talking microphones unless they contain a filter to attenuate low frequencies. Crystal type microphones generally prove more satisfactory for close-talking applications.

(B) The amplifier response characteristics should be adjusted so that the low frequencies fall off severly, or

(C) If it is impractical to change the microphone or alter amplifier characteristics, a simple and effective method is to introduce a series condenser into the loudspeaker circuit. For an 8 ohm line, the capacity should be approximately 40 mfd. This may consist of electrolytic condensers wired back to back to form a non-polarized capicator. For a 16 ohm line, use 20 mfd. The capacity will vary inversely with impedance. A 500 ohm line would take a paper condenser of .5 mfd. The condensers in the lowest impedance output line should have a working voltage of at least 100 volts, and for the 500 ohm line a working voltage of at least 400 volt. See Fig. 22-20.

PA LOUDSPEAKERS

For best results from PA sound systems it is imperative to use properly designed reproducers. Representative types are illustrated and described briefly in following paragraphs.

Radial Reflex Projector

University models RLH, RPH and RSH, Fig. 22-21, are re-entrant horns

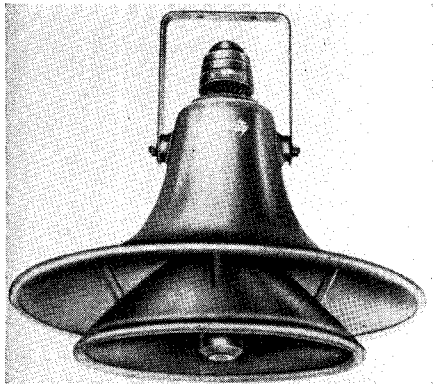

Fig. 22-21. University model RPH Radial reflex speaker. (Courtesy University)

with radial deflectors for uniform 360° sound distribution. They cover large areas and override high noise levels without blasting. A typical application is shown in Fig. 22-13. The long air column of the RLH (5 ft.) and its low cutoff make it well suited for music and general applications.

Specifications

Model	*RLH*	*RPH*	*RSH*
Low Cutoff	120 cps	150 cps	180 cps
Air Column	5 ft.	4 ft.	3 ft.
Diameter	28½ in.	25 3/16 in.	18⅞ in.
Height	18½ in.	14 in.	11 in.
Weight	21½ lbs.	18 lbs.	12 lbs.

Exponential Re-entrant Trumpets

The *Racon* models RE-60, RE-50, RE-35 and RE-25 trumpets have a true exponential flare to couple the diaphragm to the outer air. See Fig. 22-22. No conical sections whatsoever are used. The areas of the horn along its length are expanded exponentially (if unfolded, the outline would be a logarithmic curve).

Back base and inside tone arms are heavy aluminum castings. Outside bell is a heavy gauge aluminum spinning; overall finish is in weather-enduring gray hammertone. The basic design of the trumpet eliminates resonant effects. As a result, no rubber damping ring is needed around the outer edge of the bell. Model RE-50 is for systems requiring faithful response of both music and speech. Model RE-35, with a slightly higher cutoff, is designed for systems where maximum emphasis is placed on speech reinforcement, with music reproduction incidental. Model RE-25, with the highest cutoff, is extremely effective for keen voice penetration. Model RE-60, for all uses where maximum low frequency emphasis is essential, is especially recommended for chime reproduction in church steeples and all outdoor wide range music systems.

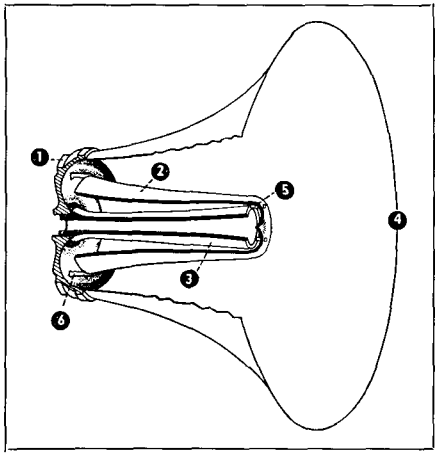

Fig. 22-22. The Racon exponential re-entrant trumpet (1) cast aluminum back (2) non-resonant exponential flared reflector (3) non-resonant exponential flared cast aluminum tone arm (4) exponential flared heavy spun aluminum bell (5) precision machined spacers maintain correct distance between tone arm and reflector (6) integrally cast bosses to provide reflector concentricity and spacing between reflector and back casting. (Courtesy Racon)

Straight Exponential Horns

The *Racon* ST-251B, Fig. 22-23, is typical of the 14 straight exponential all-weather horns widely used in sound systems.

Specifications

Model No.	*RE-60*	*RE-50*	*RE-35*	*RE-25*
Air Column	6′	4½′	3½′	2½′
Distribution angle	45°	50°	55°	60°
Cutoff frequency	112 cycles	140 cycles	175 cycles	225 cycles
Bell diameter	26″	25¼″	19″	13½″
Length without unit	28″	23½″	16¼″	11″
Thread size		1⅜″-18		
Mounting	U-bracket (swivel ratchet with pipe, on request)			
Weight (net)	12½ lbs.	11½ lbs.	8 lbs.	5¾ lbs.

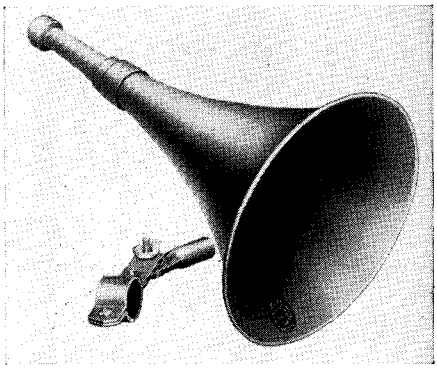

Fig. 22-23. Racon straight exponential horn. (Courtesy Racon)

By strict adherence to true exponential design, these speakers are capable of exceptional uniform response and high acoustic output. The ST-251B may be specified where keen speech penetrations coupled with good directional characteristics are required.

The horn is of non-resonant construction and consists of a heavy cast aluminum throat section and a bell of spun aluminum. Non-vibratory design permits high level reproduction without harmful resonant effects. The bracket is threated for a standard ½″ pipe and flange. Throat thread size is 1⅜″-18 permitting the use of any *Racon* (or equivalent) 25-35 watt driver unit. Finish is in weather-resistant gray hammertone.

In addition to the ST-251B, air column lengths of 3½′, 4½′ and 6′ are produced in a variety of bell materials. These bells may be obtained in spun aluminum, phenolically treated acoustic material or a combination of the two. The 4½′ models can be supplied with 1 or 2-unit throats and the 6′ models with 1, 2 or 4-unit throats. Power capacities of the various models range from 25-140 watts, depending on the number and choice of driver units.

Specifications—ST-251B

Air Column ..... 2′
Units Required 1
Bell Diameter ..... 12″
Cutoff ..... 250 cycles
Material ..... Aluminum
Throat Casting Length ..... 8½″
Net Weight ..... 2 lbs.
Shipping Weight ..... 5 lbs.

Dual Railway Speakers

The *Racon* model RR-40 dual speaker, Fig. 22-24, has been designed primarily to meet the rigorous 365 day requirements of railroad yard sound systems. Design consideration makes them adaptable for other industrial sound installations such as open pit mines, steel mills and factories, which require high intelligibility and unusual clarity and sensitivity when used for "talk back" purposes. Extreme ruggedness coupled with immunity from sulphurous and other harmful acid fumes are other outstanding design features.

The model RR-40 consists of a heavy, non-corrosive center aluminum casting, with a weatherproof steel bell re-entrant speaker installed at each end of the opening. The back of the individual speakers is also a heavy aluminum casting which is drilled and tapped around its periphery to receive six ¼″ hex headed bolts through the center casting.

Entry to the inside of the center casting is through a removable 5½″ x 7″ cast aluminum front and back cover plate. There is ample room internally for the installation of a line transformer, terminal strip and minor accessory items. These components may be installed on the inside of the back cover

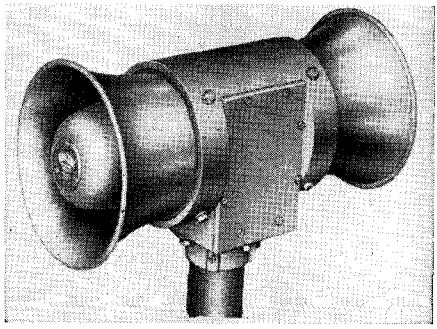

Fig. 22-24. Racon models RR-40, RR-50 dual railroad speakers. (Courtesy Racon)

plate to permit ready access for initial installation. In freezing weather, service may be accomplished with relative ease by electricians and technicians working in heavy cumbersome gloves. The possibility of water seepage has been completely eliminated by the use of rubber cement and heavy velumoid gaskets between each cover plate and the casting.

A heavy bronze female mounting flange is a standard part of the speaker. It permits a slip fit for a 2½" pipe and secure locking is obtained by a number of ¼" *Allen* screws threaded into offset bosses. Standard finish is in hard-baked gray hammertone over a zinc chromate primer. To assure long life over varying conditions of temperature and humidity, the diaphragm is of bakelized linen. Magnet material is *Alnico* 5 for high flux density and all voice coils are wound with aluminum wire for maximum efficiency and sensitivity, an outstanding advantage where these dual speakers are used as microphones in "talk back" systems. High diaphragm sensitivity permits highly intelligible "talk back" at distances up to 100′. Voice coil leads are beryllium copper gauze to relieve fatigue and are welded to prevent the corrosive effects of soldering. All internal driver unit connections are tropicalized.

The cutoff design point is 350 cycles to provide a high degree of clarity and intelligibility. Boominess is eliminated by the almost complete attenuation of frequencies below 350 cycles. The individual speakers may be relied upon for a 45° spread of sound in the face of the high noise level of train switching or the clatter and confusion of train platforms.

Specifications Model RR-40

Frequency Range.....350-6000 cycles
No. Driver Units.....2
Distribution Angle (per speaker)..45°
Operating capacity (total)....40 watts
Peak Capacity.....70 watts
Impedance (speakers in parallel).....8 ohms
*Sensitivity .....108.5 db.
Bell Diameter.....9½"
Length .....20"
Weight (net).....31 lbs.
Weight (shipping).....40 lbs.
*4 ft., 1 watt input, 1000 cycles

Specifications Model RR-50

Specifications are identical with Model RR-40 with the exception of the following:

Operating Capacity (total)....50 watts
Peak Capacity.....100 watts
*Sensitivity .....110 db
*4 ft., 1 watt input, 1000 cycles

Horizontally-concentrated Horn

The *Racon* COB-11 "cobra" type horn, Fig. 22-25, is designed for public address systems requiring high clarity reproduction with maximum concentration of sound in a horizontal plane. It provides a uniform sound field over a horizontal angle of 120°, and a vertical angle of 40°. It is of "straight" horn design and its 2-3 db higher efficiency is due to the use of a true exponential flare which results in a higher velocity of sound; the complete elimination of harmful, sound-absorbing material around the periphery of the horn mount and the elimination of attenuation caused by resistance and reflection inherent in many re-en-

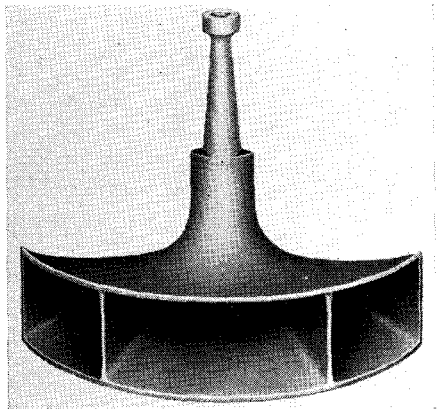

Fig. 22-25. Straight type horn providing wide horizontal angle distribution. (Courtesy Racon)

trant speakers. The low frequency cutoff is 250 cycles.

The horn consists of a heavy two-piece non-vibratory aluminum coating, designed to withstand service indoors or outdoors. It is provided with a rib-reinforced two-section serrated mounting bracket (not illustrated) which is screwed to the back of the casting directly above the flare. The bracket permits coupling to a standard 1¼″ mounting flange. Finish is in weather-resistant gray hammertone over a zinc chromate primer.

The attenuation of frequencies below 250 cycles results in crisp, highly articulate quality. Response is smooth and uniform throughout the transmission range because of true exponential flare design.

The horn is particularly adaptable for indoor or outdoor installations where reverberation, echoes and "hangover" present a problem. It is capable of providing a uniform pattern of sound to large groups of people scattered over wide areas. Thread size is 1⅜″-18, permitting the use of 25-35 watt driver units.

The COB-11 may also be used as a middle register or high frequency horn in high quality, wide range audio systems employing two or three loudspeakers. The combination of high efficiency, wide angular coverage and low cutoff make it ideally suited for this purpose.

Specifications—COB-11

Cutoff Frequency.....250 cycles
Distribution Angle.....120° horizontal, 40° vertical
Thread size .....1⅜″-18
Dimensions..... 17⅝″ H, 22¼″ W, 13⅜″ D
Net weight.....12 lbs.
Shipping Weight.....17 lbs.

Driver Units

The *Atlas* Model PD-5VH is a high fidelity reproducer, Fig. 22-26, using the "Alnico V-Plus" high efficiency, completely shielded and hermetically sealed assembly. A new type inverted dome diaphragm with a closely matching, phase equalizing plug prevents internal phase cancellation or destructive interference. This design results in clear, crisp high frequency response. The voice coil is terminated by two special constant tension type binding posts that insure perfect and continuous electrical contact despite any form of vibration. A streamline outer "double seal" housing offers a fine appearance and added protection against all climatic conditions. Model PD-4V is an all-purpose "Alnico V-Plus" drive unit offering a degree of efficiency and a range of response adequate for installations where economy is a critical factor. This 100% weatherproof unit will handle 25 watts continuously. Model PD-3V is a reproducer also designed around the "Alnico V-Plus" magnetic assembly. The diaphragm is of full phenolic construction, very similar in design to the diaphragms used in the larger size driver units. The unit is hermetically sealed and can be safely exposed to all climatic conditions. The frequency response is adequate for all normal applications.

Fig. 22-26. Model PD-5VH 25 watt driver unit. (Courtesy Atlas Sound)

Specifications

Model	*PD-5VH*	*PD-4V*	*PD-3V*
*Power	25 watts continuous	25 watts continuous	12 watts continuous
Impedance	16 ohms	16 ohms	8 ohms
Frequency	80-9,000 cps	90-6,000 cps	100-7,000 cps
Thread Size	1⅜"-18	1⅜"-18	1⅜"-18

*Given power ratings are for continuous input. Peak power ratings may safely exceed these amounts by 25%.

Multicellular Horns and LF Speakers

Our final example of special loudspeakers and horns for sound distribution is illustrated in Fig. 22-27. For complete coverage of an entire auditorium from a central point (360°) as, for example, at a boxing match—a cluster of *Altec Lansing* multicellular horns and low frequency speakers in cabinets provides full range reproduction with intelligibility and naturalness. The size and number of units required are determined by the size and contour of the auditorium or arena, in order to secure full area sound permeation. Fig. 22-27 shows four *Altec Lansing* Model 1505 horns using 8 model 290 H.F. speaker units and four model 612 cabinets using model 515 L.F. speaker units.

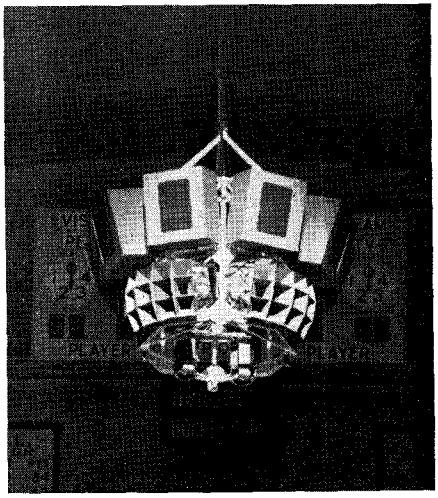

Fig. 22-27. A cluster of multicellular horns and LF speakers installed in Hershey Arena, Hershey, Pa. (Courtesy Altec Lansing)

PA MAINTENANCE

Test equipment should include at least a tubetester, volt-ohm-milliammeter, output meter, and audio oscillator. (Many volt-ohm-milliammeters include an output meter range as well as a db. scale.) An oscilloscope, signal tracer, and vacuum-tube voltmeter are invaluable for tracing hum, distortion, leakage, and intermittent troubles, as well as critical voltages in avc, compressor, expander, limiter, and inverter circuits.

Preliminary Testing

Much time and trouble can be saved by adopting these rules: (1) Take nothing for granted, and (2) look for the simple things first. Although both rules should be obvious, it is surprising how often they are overlooked. Many hours have been spent checking tubes, condensers, and voltages when the trouble lay in a rosin joint or faulty connection.

Rule 1 applies equally as well to tube testing. Certain multi-element tubes, especially pentagrid converters, duodiode triodes, and beam power output tubes are notorious for giving a satisfactory reading (particularly on emission-type testers), only to be inefficient or become totally inoperative when the normal load is applied. Trouble of this sort can show up in almost any type of tube, so play safe—double-check a suspected tube with one known to be good.

Before actual testing is begun, the apparent source of trouble should be determined as closely as possible. Once the trouble is localized or confined to a particular stage, much of the usual routine work can be eliminated.

First, inspect the line cord briefly but carefully for breaks, worn spots, poor insulation, loose connections, and for

shorted strands or corroded contacts at the plug. Inspect the fuse holder for corrosion or loose contracts. If the fuse is blown, check it for proper current-carrying capacity and check the transformer for evidence of overheating. A blown fuse (if its rating was correct) should not be replaced until the line cord and power transformer have been checked for internal and external shorts and grounds. If these appear to be in good condition, the amplifier should then be turned on, making sure the speaker or normal load is connected.

Next, inspect the rectifier tube for open or burned-out filament, and for red-hot plates which indicates a shorted input filter condenser. A shorted output filter is often indicated by a purple glow on the inside of each plate, surrounding the filament. Hot rectifier plates, accompanied by an overheated filter choke, could point to a shorted output filter condenser, a possible short to ground at the output side of the choke, or a shorted bypass condenser at this point. In either case, turn the amplifier off immediately to prevent further damage.

While the rest of the tubes are heating, inspect the microphone cable for apparent breaks or frayed shield and the plug for loose or defective connections. The microphone itself can be checked later. When the tubes have reached normal operating temperatures, check for burned-out heaters or filaments by touching metal tubes gently, or by observing heater glow in glass tubes. A cold tube is an almost certain indication of a burned-out filament. It is not absolute in every case, however, since loose tube prongs, a rosin joint, or broken filament supply lead at the tube socket could be responsible.

During these tests, set the gain controls approximately half-open and connect the microphone. If the amplifier is in operating condition, acoustical feedback should be experienced. The microphone cable can be checked for intermittent breaks and faulty connections by twisting and moving the cable. Broken leads usually will be found within six inches of either end, since most of the bending and strain during use takes place within this distance. If no output can be obtained from the amplifier, but normal hiss or tube noise can be heard, check the condition of the microphone and cable by substitution. If no substitutes are immediately avialable, a quick check can be made by inserting an open-circuit plug into the microphone input. A loud hum or pop indicates that the system from that point to the speaker is at least operative.

Assuming the amplifier to be inoperative at this point, proceed as follows: Start at the speaker and work back, stage by stage, toward the microphone. First, listen for hum in the speaker. A normal amount proves the field coil to be in good condition. Absence of hum could mean an open or shorted field coil or filter choke, or a shorted filter condenser. It could also be due to a lack of "B" voltage which, in turn, could be caused by a defective rectifier tube, faulty socket contacts, or an open circuit in the high-voltage secondary winding of the power transformer. Excessive hum usually means one or more open filter condensers or a shorted bias choke or resistor.

Double-check the field coil by holding a screwdriver in front of the core and noting the "pull." Use care to avoid damaging the speaker cone.

The output stage is next in line. Remove the output tubes, one by one, from their sockets. Absence of an accompanying pop denotes an open output transformer or voice coil, a shorted bypass condenser, or no "B" voltage. One of the tubes in a pushpull stage should not be removed for any length of time unless the other is also removed. The remaining tube is forced to carry twice its normal load and may become soft or gassy.

The tube in the preceding stage (usually the driver or inverter) is next removed and replaced. Absence of noise indicates no plate voltage due to an open dropping resistor or shorted bypass condenser, open or shorted coupling condensers, excessive cathode bias in the output stage (biasing these tubes past cut-off), or defective output tubes.

Each preceding stage is checked in the same manner, with a lack of noise accompanying tube removal or replacement indicating trouble in the plate circuit of that immediate stage, or in the grid circuit (or tube) of the following stage. A simple approximation of the loss or gain of each stage can be obtained in these tests by noting the increase in circuit "pop" as each tube is removed and re-inserted. Tubes with control grid caps can be given the same test by touching the caps with the finger or with a screwdriver.

If the trouble has been located during this preliminary checking, much time is saved in subsequent routine testing. If the trouble has not been found, the tests have by no means been wasted. The regular routine tests are simply taken up at this point.

Tubes should be tested first. In these tests the amplifier should be left on so that the tubes will remain at normal operating temperatures. In this way leakages, intermittent shorts, and noise are more readily indicated. Both output tubes are removed and tested; the other tubes are tested in any order, the rectifier being last. A two-fold purpose is served by this method; removing the output tubes first eliminates unnecessary noise, and the surge in "B" supply voltage as each tube is removed often will reveal leaky or intermittently-shorting condensers. The amount of overload, unless abnormal conditions exist, will not be sufficient to damage condensers in good condition.

Individual tests should be made for low emission, noise, shorts, leakage, and intermittents. Tubes testing ten percent or more below normal should be replaced, since the oxide or other emitting element usually deteriorates rapidly from this point. Tests for shorts and leakage should be made according to instructions with the individual tube tester. The most common point of leakage, both constant and intermittent, is from heater to cathode. This very often is the cause of distortion in beam power tubes.

Intermittent operation can be checked by tapping the tube envelope with the fingers or with a small rubber mallet. Tube noise and microphonics may best be determined by this method, with the tubes in the amplifier. Often a short will appear momentarily and then disappear when tapped or when the operating temperature increases. Tubes showing this indication may be responsible for later trouble and a "comeback." Any tube which appears abnormal, even momentarily, should be replaced as a safe measure.

Voltages

All voltage tests should be made with the amplifier in normal operation or as near normal as possible, with all tubes in their sockets. Point-to-point measurements should be made, starting at the tube sockets. For practical purposes, an ordinary 1000 ohms-per-volt meter will serve for plate, screen, and cathode voltage readings. For avc, limiter, inverter, and other critical circuits, however, a vacuum-tube voltmeter must be used.

Resistors

These should be checked for thermal noise, open circuit, and overheating. Carbon resistors sometimes develop high internal noise; wirewound units may short between adjacent turns or become open due to heat expansion. The cause of overheating should be found as quickly as possible. In most cases it is desirable to turn the amplifier off and check for component shorts with an ohmmeter. Resistors with values exceeding the usual ten or twenty percent tolerance should be replaced.

Condensers

Electrolytic and paper condensers may be checked with an ohmmeter, condenser bridge, or by the substitution method. The ohmmeter is preferred for locating shorted condensers. For complete tests, the condenser analyzer is recommended. The usual bridge is reasonably priced, simple to operate, and

saves time otherwise spent in substitution tests. A simultaneous check can be made for capacity, leakage, intermittents, opens, shorts, and power factor in electrolytics. For accurate tests it is necessary to disconnect only one lead of the condenser to be tested.

Condensers should be checked for noise and intermittents while in the circuit by tapping, probing, or vibrating gently, and should be inspected for open or dried-out containers and evidences of overheating. Coupling condensers and avc circuits are especially noted for leakage. In replacing these units, be sure to use only the best replacements available.

Interstage and Output Transformers

Windings should be checked with an ohmmeter for opens and shorts. Primary and secondary windings seldom short to each other but often a section of one winding will become shorted internally. Halves of push-pull windings should be checked for balanced readings and replaced if the ohmic values are not reassonably close together. Transformers should be examined for overheating and loose core laminations.

Gain Controls

These seldom give trouble outside of becoming noisy and worn. A noisy control can sometimes be cleaned by removing the back cover, flushing with carbon tetrachloride, and applying a thin film of vaseline to the moving parts. If the control is worn or extremely noisy, replacement obviously is the only solution. Variable controls in the grid circuit usually are between 250,000 ohms and 1 megohm. Values differing radically, unless in cathode bias or special circuits, usually indicate defects or tampering and should be corrected. If in doubt consult the manufacturer's notes or the circuit diagram.

Leads to controls should be kept well away from ac and filament leads and shielded to reduce hum pickup from these sources.

Microphones

Crystal microphone troubles usually are limited to de-activated crystals, open cable leads, or paralysis due to rough treatment. Dynamic microphones may have "frozen" or warped diaphragms caused by dropping or rough handling, de-magnetized fields from operating too near high-level ac fields, and occasional coupling transformer troubles. Velocity microphones seldom are used in rugged PA installations, due to the tendency of of ribbons to stick, sag, or "pop" especially in windy or open-air installations.

Tube Sockets, Terminals

Sockets should be checked for loose prongs, dirty contacts, and evidences of arcing between prongs (especially the rectifier socket). Soldered connections should be examined for high-resistance or cold-soldered joints; wiring should be inspected for breaks and worn insulation; and all ac and filaments leads must be routed as far away from low-level circuits as possible.

Quality Test, Frequency Response Measurements

After the entire amplifier has been serviced, a final test should be made to determine over-all operating efficiency and frequency response. An audio oscillator with a db. meter or low-range ac voltmeter across its output, is connected to the amplifier input. An output meter is connected across the amplifier output transformer, preferably from plate-to-plate. With the gain controls set at normal, the audio oscillator is varied from about 30 cycles to 10,000 cycles and its output level adjusted, if necessary, to maintain a constant reading on the first meter. The amount by which the second meter (at the amplifier output) varies indicates the frequency response of the amplifier system. A typical high-quality amplifier will be "flat" to within plus or minus 2 db over the entire range.

CHAPTER 23

Acoustics

The behavior of sound and its control in auditoriums, studios and in the music room and the calculating of audio power requirements.

● The finest PA sound system in an auditorium or a music system in a living room can never produce optimum results unless the area is acoustically correct for the proper control and behavior of the projected sound waves. In the case of broadcast or recording studios—means must be provided whereby the studio acoustics can be "adjusted" to meet specific needs.

To study the behavior of the dispersion of sound requires measurement techniques that are capable of interpreting sound behavior and to show methods for its control.

Auditorium Acoustics

Acoustics comes first in auditorium design. It is basic to the purpose of the structure. Beauty means nothing if an auditorium fails to provide a meeting place where many people can hear and see a single performance simultaneously and comfortably. The problem is to project speech and music in ample loudness, with distinctness and faithful reproduction to all parts of the room. In part this means separating "wanted sound" from "unwanted sound."

Solving Structure Borne Noise

One type of unwanted sound has its source outside of the auditorium. This is partially a problem of auditorium placement. Some "outside" unwanted noises may originate within the building. They are transmitted through the structure of the walls or framework of the building, or plumbing or heating connections. This calls for insulating the noise source from the structural members by resilient materials, such as *Acoustone,* which absorb vibration.

Sound Insulating Walls

Partitions may be supported with a double set of studs—one set carrying one face, the other set the opposite face of the partition. Thus sound vibrations striking the outside face of the partition will not be as readily transmitted by the wall structure, to set the inside face of the partition in motion, producing unwanted noise in the auditorium.

To bar outside noise, all openings to the room must be effectively sealed. The cost is high and usually unnecessary. If interfering outside noise is kept about 10 to 20 decibels below the ordinary level of wanted sound, the result is usually satisfactory.

"Inside" Noise

With a completely quiet audience there can still be unwanted sound originating within an auditorium. This is reverberation or echo of the speaker's own voice, caused by the sound bouncing from walls and ceilings. It is estimated that 1/15 of a second interval between two sounds is required to enable the ear to recognize them as separate sounds. In a room with high reflection of sound, speech may be unintelligible because new syl-

lables pile up with the reverberation of previous syllables.

Reducing Reverberation

A plaster wall or ceiling absorbs only about 3 per cent of the sound striking it. The remaining 97 per cent will bounce back as a secondary sound and be reflected again and again, losing only the same percentage of energy on each bounce. These reflected sounds pile up on each other to add to the volume of the first sound and delay its ending until seconds after the original sound ceases.

This is a problem that can be controlled with acoustical materials. They are sound absorbent and leave less sound energy to be reflected on each "bounce."

It is not desirable to eliminate all reverberation within an auditorium. It has been found that a reverberation time between 7/10 of a second and two seconds makes for pleasant and easy hearing. Smaller rooms should be near the low figure—larger auditoriums the higher.

Hints on Applying Acoustical Materials

The best method of applying acoustically absorbent material is to distribute it throughout the room as much as possible. This has led to covering an entire ceiling of a room.

Generally, absorbents should be near the rear of the room, while the front of the room near the sound source should be "live." This prevents absorption of sound energy at the source and permits reinforcing reflections to reach the rear of the room.

In wide, low-ceilinged auditoriums, it is often better to treat side walls and rear walls and leave the ceiling bare to aid reflections to the rear of the room. Usually the ceiling under a balcony should not be treated, since sound levels are often low in that area.

The following locations should always be checked in considering the location of acoustical absorbents:

The ceiling—The rear wall—Side walls of long, narrow "shooting gallery" type of rooms or low-ceilinged auditoriums—The face of the balcony in theaters—Ceilings and side walls (down to wainscot) in high-ceilinged corridors.

Sound Distribution and Size Limits

A room corrected to achieve desirable reverberation conditions can be a poor hearing room if the sound is not well distributed through the area. It is difficult for the average speaker to make himself heard in a room with a volume greater than 400,000 cubic feet (length x width x ceiling height). Two hundred thousand cubic feet is a preferable volume. In rooms of greater size, electrical amplification is necessary.

"Dead" Areas

Even in rooms within the above size limits, there are sometimes found "dead" areas where very little sound is received, or spots of confused sound. Usually these result from concave wall surfaces which focus reflected sound, or from room shapes which prevent reinforcing reflections of sound from reaching remote areas.

These few simple rules often eliminate many of these problems:

1. Avoid concave curved surfaces.
2. If curves are necessary, use convex.
3. Substitute flat areas for curves even if it means breaking up a large curve into a series of straight lines.
4. Avoid large unbroken surfaces. Use projections and surface irregularities to aid in diffusing sound.
5. Avoid complicated designs which theoretically focus sound to remote areas. They are usually unsuccessful.

Public address amplifiers are a good investment for sound distribution, but they do not remedy excessive reverberation or act as a substitute for acoustical treatment.

Sound Fidelity

Sound is a component of a gamut of tone frequencies, and the third aim of scientific acoustics is to achieve fidelity or naturalness of sound.

A long narrow tube-like room, or one with large floor area and low ceiling

might provide distortion by reducing or increasing volume of certain frequencies. Even some acoustical absorbents have poor absorption at certain useful frequencies, or "peak" in absorbing efficiency at one or two frequencies, to cause distortion.

MEASUREMENT OF STUDIO AND ROOM ACOUSTICS

The field of sound reproduction has at the present time reached the stage of development where it is possible to reproduce sounds from a loudspeaker, after numerous stages of recording and transmission, which will sound almost indistinguishable from the original sounds which entered the microphone. In addition, present electronic and electromechanical techniques are constantly being used to improve sound reproduction equipment toward the ultimate purpose of making the reproduced sound identical with the original.

However, no matter how well the output sound reproduces the input, the entire character of the reproduction can be drastically altered by faulty acoustic design either in the room where the sound originates, or in the room where it is reproduced. Bad acoustic design can result in loss of intelligibility and "presence," increased noise level and reduction of dynamic range, resonances and spacial distribution defects, and generally make good program material unpleasant to the ear. This factor has long been recognized, and considerable work has been done in the design of studios, rooms and auditoriums to determine how to attain the best acoustic qualities. The problem is a complex and difficult one, and has still not been solved to complete satisfaction, although considerable progress has been made toward its solution.

Even under ideal conditions, the design of any room, studio or auditorium is difficult because of the limitations imposed by architectural factors. Therefore compromises usually must be made in designing for optimum acoustic performance. Then, once the room has been completed it is tested to see how well it meets the performance requirements. Methods of testing[1] form an extremely important part of any type of design procedure, and in acoustics this is especially true. The ideal test gives a measure of the performance, indicates what may be wrong and by how much, and gives some indications of what steps may be taken to correct any defects which may exist.

Such tests have only recently been developed for acoustic measurement, and have considerably increased our knowledge about what factors are important in determining the acoustic quality of a room, and what their effects are. We will describe these measurement techniques, and show how they aid in the improvement of acoustic designs.

In order to understand the methods and equpiment used for the measurement of studio and room acoustic properties, it is first necessary to understand what factors are involved and their effects upon any sounds which are present in the room.

Specific Factors Which Determine Acoustic Properties of Rooms

When sound is listened to in a room or an auditorium, the room has two important effects: (a) it reverberates and reflects the sound from the walls, ceiling and floor; otherwise, if there were no reverberation, the sound would appear as if it were being heard in a completely open space; (b) it excludes external noises. Therefore measurements of the acoustic properties of rooms must concern themselves primarily with various types of reverberation and noise measurements.

Reflections from the boundary surfaces of the room, which basically determine its acoustic character, can have several different effects depending upon the nature of the sound which is heard. These different effects require different measurement techniques.

In general, a number of measurements must be performed before it can be determined whether the acoustic properties of a room will be acceptable. The

factors which should be known include the following:

(1) Reverberation and reverberation time, including
  (a) fluctuation during decay
  (b) echo and flutter echo
(2) Sound diffusion (and sound concentrations)
(3) Transient characteristics
(4) Noise level

and when the room is the one in which the sound is being reproduced, it is also desirable to know the relationship between the reproducing system and the room acoustics, as given by:

(5) Power output of the reproducing system
(6) Frequency response of reproduced sound

Some of these factors have been studied extensively, and standards determined which correlate the measured value with the acoustic performance. In the case of a few of the above factors, standards have not yet been determined, but practical experience has shown what should be the requirements for acceptability.

When a sound is started in a room the intensity does not immediately reach its maximum, because it takes an appreciable time for some of the sound to reach the walls and undergo one or more reflections before it reaches the listening point. The intensity reaches its maximum when the steady-state condition is attained. After the sound source stops, it also takes an appreciable time before the various reflections are no longer heard, having been completely absorbed. This persistence of sound is called *reverberation*, and is different from an echo in that it consists of a large number of reflections which blend evenly with one another and with the original sound. The *reverberation time* has been defined as the time required for the sound intensity to decrease 60 db after the source has been stopped.

When there are large flat surfaces, these may give rise to distinct reflections which are heard as *echoes* if the path difference is too great. When parallel walls are located opposite one another, there may be heard a succession of distinct reflections between them—this effect is known as *flutter echo.*

The presence of concave surfaces tends to focus sounds towards their center of curvature, giving a greater sound intensity than at other points in the room, and creating the impression that the sound originates at the concave surface. If standing-wave patterns are possible at certain frequencies, these frequencies will tend to be over-accentuated at positions where the standing-wave patterns are set up. For best acoustic properties, the sound pattern in the room should be as *diffuse* as possible at all frequencies, with no standing-wave patterns and no points of excessive sound concentration. Under these conditions, the decay of sound (reverberation) when the source stops will be smooth, marked only by small fluctuations.

The reverberation time and the sound diffusion characteristics of a room are essentially steady-state characteristics, since the sound is allowed to reach equilibrium conditions before these factors are measured. However, all natural sounds are essentially transient in nature, therefore the behavior of the room for transient sounds is of great importance. It is necessary also to know whether the steady-state reverberation time and sound diffusion are accurate for transient sounds, and what differences may exist. In many cases the transient characteristics are much more important than the steady-state, and sometimes give much more information about the characteristics of the room.

The ease with which the reproduced sound may be heard and understood,

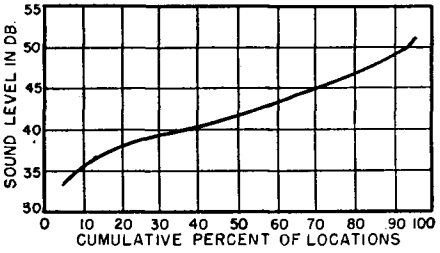

Fig. 23-1. Graph showing the residual noise level in homes.

and the dynamic range which is possible, depend upon the residual noise level in the room. The tolerable noise level in the studio and in the reproducing system depends upon the noise level in the listening room. The average noise level in empty theaters is 25 db (reference level is 10^{-16} watts per square centimeter); with an audience the average will generally be about 42 db. The noise level of most residences is given in Fig. 23-1, which shows that there is a wide variation in noise from one location to another.

In any audio reproduction, it is important also to know the relationship between the reproducing system and the acoustics of the listening room. The power output from the loudspeaker should be capable of producing a minimum sound intensity of 80 db, and for best performance should be capable of producing a level up to 100 db without distortion. Fig. 23-2 shows the acoustical power required, as a function of the room volume, to produce a sound level of 80 db.

The sound output from the loudspeaker should have a flat frequency response characteristic. The function of the reproducing system is to reproduce at the ear of the listener a duplication of the sound which is present at the microphone, and to affect the tonal qualities as little as possible. In certain cases it is necessary to restrict the reproduced frequency range because of acoustic or reproduction difficulties, but in such cases the restriction is a compromise rather than a desirable situation.

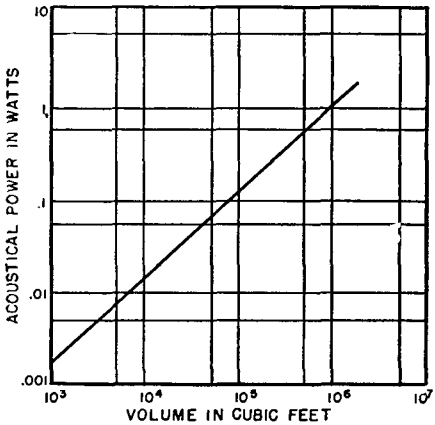

Fig. 23-2. Acoustic power required to produce an intensity level of 80 db as a function of the room volume.

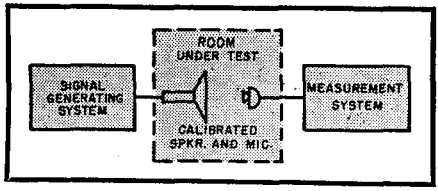

Fig. 23-3. A basic test setup for performing acoustic measurements in rooms.

General Technique of Acoustic Measurements

Acoustic measurements consists essentially of generating a known sound signal in the room which is under test, and determining the resulting sound distribution. The basic setup for performing measurements of this type is shown in Fig. 23-3. A signal generator of the proper type supplies the desired signal which is applied to the calibrated loudspeaker. (The signal generator here is taken to include not only the generator of the low-level signal, but also any auxiliary amplifiers which may be necessary to increase the electrical signal level before applying it to the loudspeaker so that the necessary amount of sound energy may be supplied for testing). When testing a room in which sound is to be reproduced, it is often preferable to use the amplifier and loudspeaker system which is already installed; then the electrical test signal is applied directly to the amplifier input. The sound in the room is picked up by a microphone of known characteristics, whose output is amplified and applied to the measuring device. The specific type of signal which is generated, and the type of measurement system, will be determined by the particular acoustic characteristics under test.

Generally, a calibrated loudspeaker will not be available, whereas standard calibrated microphones are readily

available. It is not necessary that both the loudspeaker and the microphone have known characteristics, since if the characteristics of one are known it can be used to calibrate the other. Therefore only a standard microphone is necessary to obtain completely accurate and reliable acoustic measurements. A calibrated microphone which has been widely used for this type of service is the condenser microphone (see Chapter 14). These microphones are calibrated against a primary standard sound source, and may therefore be used as secondary measurement standards. Because of its small physical dimensions this type of microphone is effectively a "point pickup" which does not appreciably disturb the sound field, and it has good frequency response characteristics up to approximately fifteen thousand cycles per second.

The characteristics of the loudspeaker may be calibrated in terms of the microphone characteristics. However, such a calibration must be done in such a manner that the acoustics of the measuring room do not affect the results. The measurement must be performed in what is known as "free-field" room. The requirement of such a room is that all reflected sound and the noise level be so low that they can be neglected in the measurement. The simplest and most direct method of obtaining these conditions would be to perform the calibration out of doors at a great distance from reflecting objects, if favorable weather and noise conditions can be obtained. Free-field conditions are also achieved in special rooms which are carefully designed to have extremely small reflections from the boundary surfaces. In practice the best measuring room available will be a small deadened or partially deadened room. In such cases, the most satisfactory results are obtained by placing the microphone close to the loudspeaker so that the level of the direct sound strik-

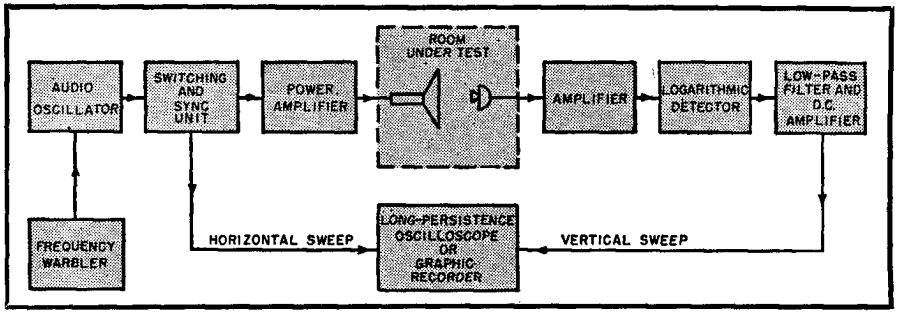

Fig. 23-4A. Measurement setup for determining reverberation time.

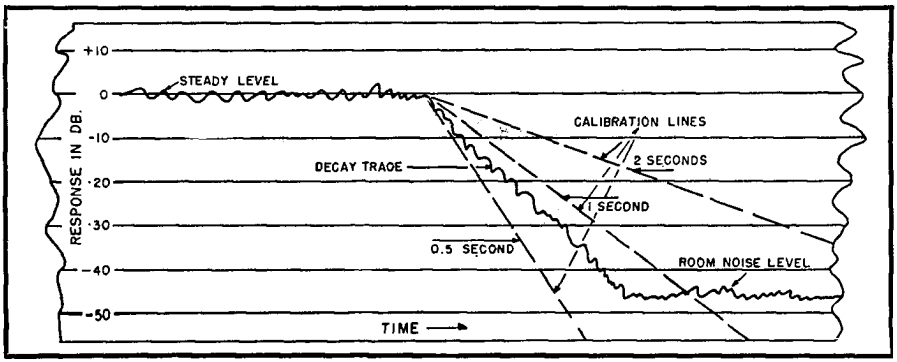

Fig. 23-4B. Typical decay curve obtained in measuring reverberation with a graphic recorder.

ing the microphone is at least 20 db or more above the reflected sound.

In most acoustic room measurements the effects of standing waves are undesirable and should therefore be minimized. This can most readily be done by frequency-modulating the test signal (usually called "warbling") by about ±10% of the mean frequency, at a rate of several times per second. When this method is used there will be continuous small changes in the standing-wave pattern, but resonances will not have a chance to build up.

Measurement of Specific Acoustic Characteristics

The basic setup of Fig. 23-3 is used for measurement of all the various factors that represent the acoustic properties of studios and rooms. Different types of signal generators and measuring devices are used, according to the specific factor being measured.

The method of measuring reverberation time is indicated schematically in Fig. 23-4. The signal is generated by an audio oscillator set to the desired frequency and warbled. The output of the oscillator is applied to the switching and synchronizing unit, which controls the sequence of measurement operations. The signal is then amplified by a power amplifier which drives the loudspeaker that generates the sound signal. The sound in the room is picked up by the microphone and amplified, then detected by a logarithmic detector to give a dc reading on a (decibel) scale, and fed to a low-pass filter. The output of the filter is then amplified by a dc amplifier. The amplified output, which gives the reverberation decay characteristics of the room, may be observed either by means of a graphic pen-and-ink level recorder or upon the screen of a long-persistence oscilloscope.

The switching and synchronizing unit turns on the sound source for a time long enough for steady-state conditions to be reached, then switches off the signal and permits the sound in the room to decay. The microphone picks up the sound intensity in the room at all times, and the sound intensity at the microphone is plotted upon the oscilloscope screen or by the graphic recorder. The decay of sound from the moment the source is switched off is observed, and the slope of the decay curve is measured to give the reverberation time for 60 db decay. There may be fluctuations during decay of the order of 10 or 20 db, but the average slope is the one which is used. In estimating the decay time it is preferable to use the initial slope, since this is the most important to the ear and the remaining portion of the decay is normally masked by subsequent sounds. The presence of large-scale fluctuations and changes in the average slope of the decay curve indicates that the room does not have a completely diffuse sound pattern, and that best acoustic performance has not been achieved.

When the sound decay curve is being measured by a graphic recorder, the measurement setup shown in Fig. 23-5 may be used without the synchronizing and switching unit. In this case, the sound source is turned on and kept on long enough for steady-state conditions to be reached, then the paper is allowed to run in the recorder and the sound source switched off. The sound decay pattern will then be recorded.

Because of the cyclically changing standing-wave pattern due to the frequency-modulated signal, when the graphic recorder type of measurement is used the recorded decay curve will be different depending upon the exact time at which the signal is cut off. With the

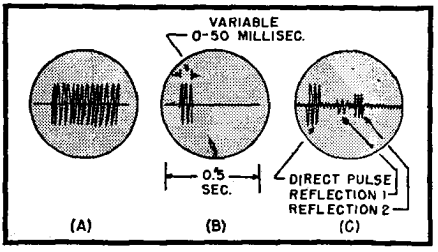

Fig. 23-5. Typical oscillograph pictures of wave shapes in various parts of a test setup (A) audio oscillator output (B) sound output of loudspeakers (C) sound received at microphone.

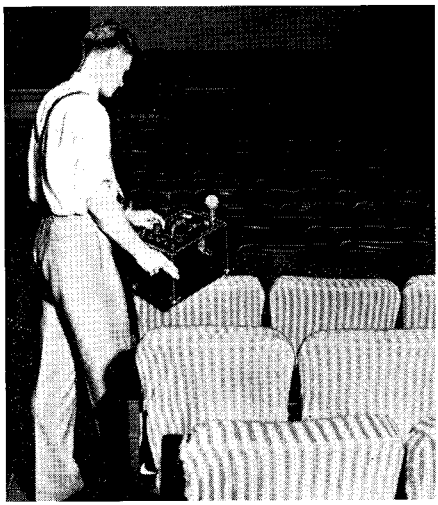

The General Radio type 759-B sound level meter being used to perform acoustic measurements in a motion picture theater.

oscilloscope method of measurement these fluctuations tend to average out, due to the superposition of a number of different decay curves which in general start at different times in the warble cycle. The effects of standing-wave patterns and interference effects can be further smoothed out by the use of multiple loudspeakers and microphones. In practice, it is desirable to reduce these errors by taking several measurements for each of several locations of loudspeaker and microphone, differing in position by about one yard. If three readings for each of four different positions are taken, accuracy in reverberation time to about 0.1 sec. can be obtained.

The degree of sound diffusion is measured mainly by observing the standing-wave pattern in the room when sound is present. Some indications can be obtained from the reverberation characteristic, but such observations are not too good because in measuring reverberation, steps are taken to eliminate the effects of standing waves. The simplest and most direct method of determining the standing-wave characteristics of a room is to produce a steady sound in the room and survey the room with the microphone to determine the intensity pattern. (In this type of measurement an omnidirectional microphone should be used, and the directional pattern of the loudspeaker radiation taken into account.) With complete diffusion the sound intensity will be uniform throughout the room for all frequencies, or will vary gradually with position according to the directional characteristics of the loudspeaker and the absorption by air of the higher frequencies. The relative intensity of maximum and minimum points will be a measure of the diffusive character of the room, and any sound concentrations will also be detected. Another method of performing this measurement is to keep the microphone fixed and slowly sweep the signal frequency over the entire audio range. Assuming the frequency characteristics of the loudspeaker and the microphone to be reasonably flat, variations in response will indicate standing waves in the room. However, this latter method does not indicate whether there may be any concentrations of sound at various points in the room.

The transient characteristics are measured by applying a test signal which has transient properties similar to those of natural sounds, and observing the resulting sound at the loudspeaker. This method has the advantage that the results can be expected to correspond closely to the actual conditions under which the room will most often be used. The complete test setup for this type of measurement is shown in Fig. 23-6. For a permanent record, the oscilloscope screen may be photographed.

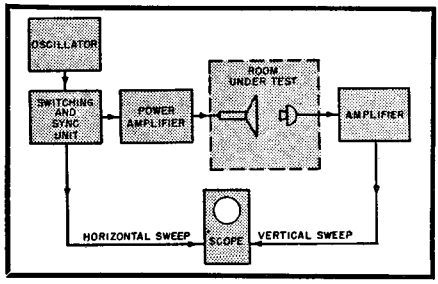

Fig. 23-6. Setup for performing transient acoustic measurements.

Otherwise, a graphic recorder may be used with a low-pass filter and dc amplifier as used in the reverberation-time measurement system shown in Fig. 23-4. In addition to the transient acoustic characteristics of the room, this system also gives considerable information concerning echoes and the location of the various reflecting surfaces which give rise to echoes and large-scale reflections.

The signal wave shapes are shown in more detail in Fig. 23-5, to give a better indication of the type of data obtained with this method of measurement. The output of the audio oscillator is a continuous sine wave which may be set to any frequency at which the acoustic characteristics are desired. The switching and synchronizing circuit contains a gating mechanism (either a motor-driven cam-operated switch or an electronic gating circuit) which permits the signal to pass in pulses as shown in Fig. 23-5B. The signal pulse length is adjustable from 0 to 50 milliseconds duration and is repeated at intervals of about 1 second, so that the reflected sound decays to a negligible value before the next impulse. The horizontal time scale on the oscilloscope screen can be set for a sweep time of 0.5 sec. across the face of the screen. (If a graphic recorder is used, the switching and synchronizing circuit will be set for just one signal pulse, and the recorded response will be the response to this one pulse.) The type of signal received by the microphone consists of the direct sound pulse plus whatever reflections there may be from any parts of the room, as shown in Fig. 23-5C. By measuring the time taken for any reflections to arrive at the microphone after the direct pulse, and by actually laying out and plotting the various possible sound paths between the loudspeaker and the microphone in the room under test, the location of the various reflecting surfaces can readily be determined.

In practice, each measurement should be taken at three different positions at each location in the room, and at several different frequencies over the entire audio-frequency spectrum. A total of at least 10 to 15 different pulse reflection measurements should be averaged for each location. This type of averaging will tend to cancel out any spurious spatial or frequency effects.

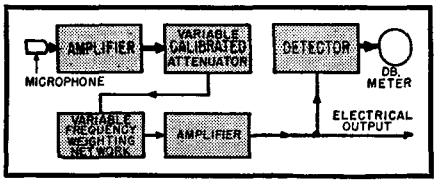

Fig. 23-7. Basic block diagram of a sound-level meter.

Sound Level and Power Measurements

Noise level and sound power output are measured by use of a sound-level meter. The basic block diagram of the standard type of sound-level meter is shown in Fig. 23-7. The sound is picked up by a unidirectional microphone with a known frequency-response characteristic. The output of the microphone is then amplified and passed through a calibrated attenuator which serves to set the meter range. The signal is then passed through a frequency weighting network which can be set for either flat response or for either of the standard noise-measurement response curves. The output of the frequency weighting network is then amplified and measured by a vacuum-tube voltmeter calibrated to read logarithmically in decibels. The output signal is also available before rectification for operation with graphic recorders or with various types of analyzers. The meter reading is accurately calibrated in decibels relative to the standard 1000 cycle/sec. reference level of 10^{-16} watts per square centimeter.

When noise level is being measured, a truly objective measurement is impossible because of the complexity of the human hearing mechanism and because of the wide variety of noises which may be encountered. However, a reliable indication of the noise level is obtained by taking into account the frequency response of the human ear, and making

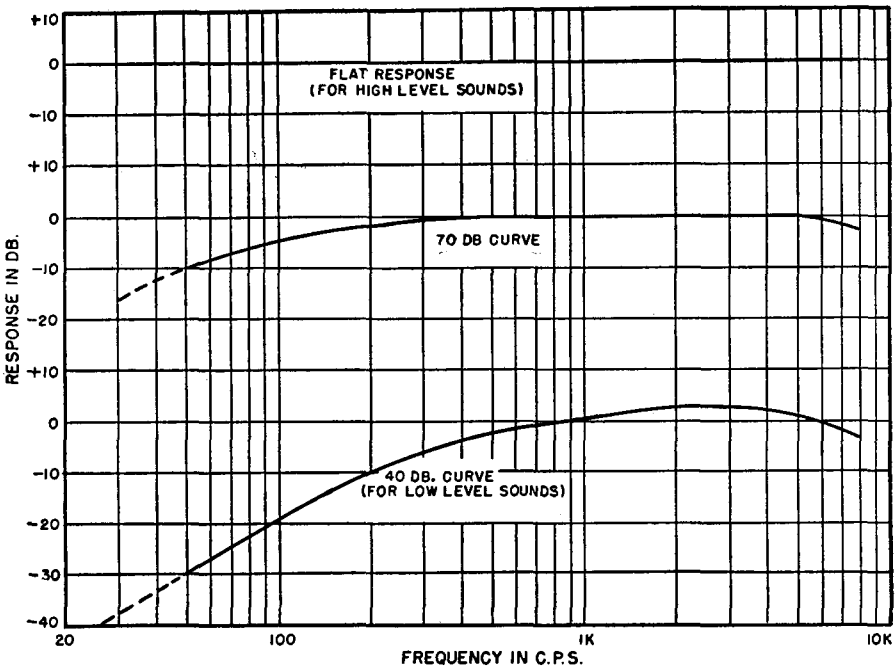

Fig. 23-8. Frequency response characteristics recommended as standard curves for noise level measurements.

the overall response of the noise meter approximately the reciprocal of the ear response characteristic. This condition is approximated by using three different frequency characteristics for the meter for different sound levels. The three response curves which are chosen by the American Standards Association as the standard curves for noise level measurements are shown in Fig. 23-8. Curve A is recommended for measurement of low levels around 40 db; curve B for levels around 70 db; and curve C, which is flat, for very loud sounds around 80 to 100 db. The actual measurement of the noise level is performed simply by having no source of sound in the room and reading the sound level on the meter.

The sound power output of the reproducing system is measured by feeding steady tone (warbled if necessary to reduce standing waves) into the reproducing system and measuring the resulting sound intensity, with the sound-level meter set for flat frequency response. The electrical signal at the auxiliary output of the sound-level meter can also be fed to any of the standard instruments for measuring the various characteristics of audio-frequency electrical signals—harmonic analyzers, intermodulation analyzers, etc. Measurements of this type performed at various frequencies will give the characteristics over the entire audio frequency range.

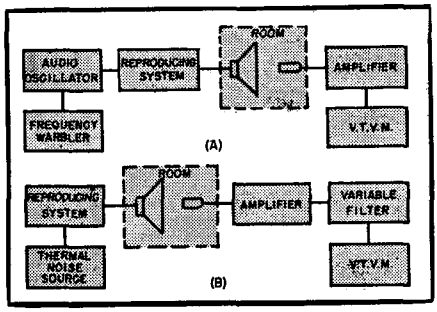

Fig. 23-9. Measurement of frequency response by means of (A) single frequency method (B) a thermal noise generator.

The frequency response of the complete system including the loudspeaker can be measured by using the basic measurement system in the manner shown in Fig. 23-9A. The method is the same as for measuring frequency response of any electrical circuit, except for the warbled frequency. The electrical signal is applied to the input of the system under test. The sound output of the loudspeaker is measured by means of a microphone, amplifier and meter whose frequency characteristics are accurately known. The frequency of the test signal is then set as desired, and the meter read, to give the response characteristic over the entire audio frequency range. The microphone can also be placed in various locations throughout the room to give the spatial radiation pattern as well.

Another method of measuring frequency response is by means of a thermal noise generator and a tunable filter in the microphone amplifier circuit, as shown in Fig. 23-9B. The signal is supplied by a source of thermal noise, such as a diode, and is applied to the input of the reproducing system. The output of the loudspeaker is then picked up by the standard microphone, amplified and passed through a narrow band pass filter, whose band width should be independent of frequency. The output of the filter is then measured by the meter. At the present time, suitable apparatus for the generation of thermal noise, and band pass filters of the type mentioned, are commercially available and this type of measurement will in the future become very important for acoustic measurements.

Results of Acoustic Measurements in Practice

The methods which have been described have been used to determine the acoustic characteristics of rooms and auditoriums in order to obtain a measure of their performance, to aid in their redesign and improvement when they do not give optimum performance, and to obtain information to aid in new constructions.

Many measurements of reverberation time have been made in the past, and much data has been accumulated on this subject. There is no theoretical basis for the choice of desirable reverberation times, but experience has shown what is most pleasing to the ear, and standards have thus been determined subjectively. Early experience with broadcast studios has shown that when there is no reverberation the room gives a dull, lifeless effect to sounds. However, when there is too much reverberation, the energy from successive sounds tends to overlap and reduce intelligibility. The optimum reverberation time is a function of the volume of the room, and rooms for listening to reproduced music should have shorter reverberation times than those for live production of the same type of music because the reproduced music will already contain some reverberation from the production studio.

The optimum reverberation times for a 1000 cycle test signal, are shown in the graph in Fig. 23-10A. The optimum reverberation time as a function of frequency relative to the 100 cycle value is shown in the graph of Fig. 23-10B. The values shown in these curves do not, of course, take into account the possibilities of microphone placement and synthetic reverberation systems which are

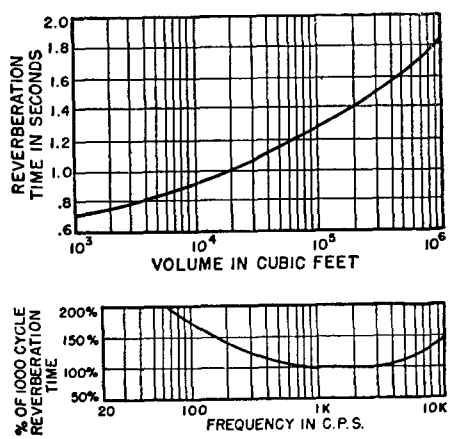

Fig. 23-10. Optimum reverberation time as a function of (top) room volume for a 1000 cycle test signal and (bottom) frequency.

used to increase the apparent reverberation time and "presence" in the reproduction of speech and music.

For a long time the acoustic qualities of room and auditoriums were judged primarily on the basis of reverberation times. However, experience began to show that it was possible for rooms to have the same reverberation time and still to have quite different acoustic properties. Measurements of the diffusive and transient characteristics show that at times these facts are considerably more important than the reverberation time, and at the present time these are being given increasing importance in acoustic measurements.

The pulse method of measuring transient characteristics is an extremely important method, and often gives much more valuable data than the reverberation time and other methods. In many cases it is the only method of correlating measured data with the results observed by the listener, when other methods fail. The results of such measurements upon a number of typical auditoriums show the type of information that can be obtained. The pulse patterns shown in Fig. 23-11 show the results of measurements on a number of moving-picture houses whose acoustic qualities had received different degrees of acceptance by listeners over a period of several years.

An investigation was undertaken to determine the causes of the acoustic differences, since the theaters had identical sound reproducer installations, and in all cases the measured frequency characteristics and the reverberation time were found to be satisfactory. The pattern (A) (Fig. 23-11) shows the pulse output of the loudspeaker, which is what the microphone would pick up in a room with no reverberation. Pattern (B) is the sound picked up by the microphone in a theater with uniformly good acoustics; the physical structure of the theater is shown in Fig. 23-12A, showing that there are no undesirable reflections. The pulse pattern represents a bad spot in an otherwise good theater whose layout is shown in Fig. 23-12B. The measurement shows a reflection from the back wall at 80 milliseconds delay, and a further reflection at 220 milliseconds delay which seems to be due to a multiple reflection as shown. Pulse pattern (D) was taken in an auditorium of inferior quality, whose layout is shown in Fig. 23-12C. Large reflections are found at both short and long time intervals, and are the reason for the bad quality.

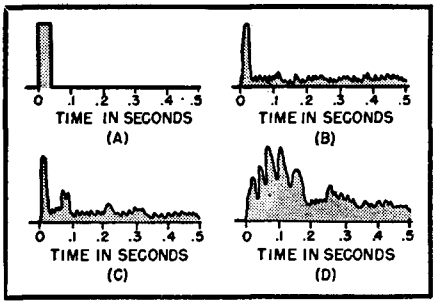

Fig. 23-11. Pulse patterns showing results of transient characteristic measurement on several different theaters.

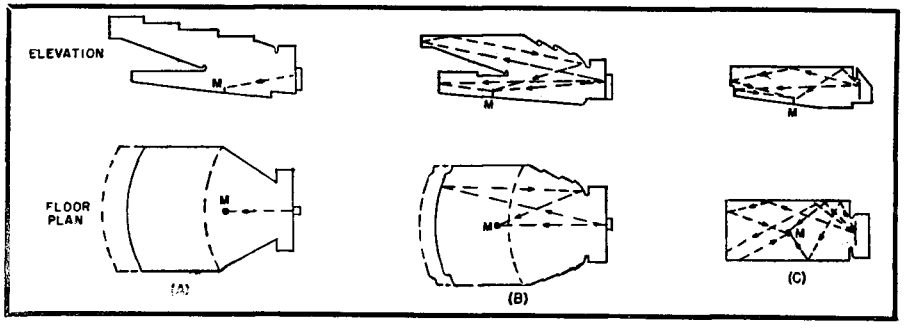

Fig. 23-12. Physical layout of theaters showing reflection paths for the various pulse echos.

In general, reflections with less than 45 milliseconds delay can be tolerated, but reflections with more than 50 milliseconds delay lead to a deterioration in sound quality due to lack of intelligibility. When there are large reflections at short time delays which arrive to the listener at large angles from the path of the direct sound, the directional effects of the sound are lost, resulting in a loss of "presence." In auditoriums where acoustic conditions are not optimum, the pulse technique also gives good indications of the possible locations of the reflections, and thus aids in correcting any defects in the acoustic design.

These measurements have indicated what the basic points in good acoustic design are, and what rules should be followed in the design of rooms, studios and auditoriums. Some of these rules are:

(a) Maximum sound diffusion should be aimed for in all acoustic designs.

(b) The room should be as unsymmetrical as possible (with no lines or planes of symmetry), and if possible there should be no walls parallel to one another, and no concave surfaces.

(c) Large surfaces should be broken up by randomly distributed irregularities such as convex spherical bumps and cylinders, and serrated surfaces. Absorbing material broken into small patches also aids diffusion. At the present time, radio broadcasting studios, theaters and auditoriums are being built according to these rules for best acoustic qualities.

The measurement methods which have been described in this chapter are being more and more widely used to give an objective indication of acoustic quality, and their application will result in continuing improvements in acoustic design and construction.

Audio Power Requirements

Most sound engineers have acquired enough experience to make good estimates of audio power requirements and equipment manufacturers try to supply packaged units to fit different types of situations. The purchaser can usually take his recommendations and obtain the desired results. However, most professional sound men will want to be able to make their own estimates. The present science of acoustics provides a basis for calculating the acoustic and electrical power required to produce a given sound intensity in different types of rooms. A few simple equations are all that is involved and these have been combined into a simple nomograph which will be described. With this graph the power required to produce any sound level in nearly all types of rooms can be estimated in a few seconds.

It should be stated that the accuracy of the graph is limited. This is not the fault of the equations involved but because of the difficulty of defining sound levels and due to the lack of accurate data on speaker efficiency. Even so, the graph will allow some useful estimates and, with a suitable safety factor, amplifier wattage ratings may be selected. The graph is also a very revealing source of information on the change in amplifier output at different sound levels and in different types and sizes of rooms.

Loudness is a sensation in the mind of the hearer and is a rather complicated matter but it is generally related to sound pressure or intensity. A great many measurements have been made of the sound intensities produced by various noises and musical instruments. A little study of this data will provide a measuring stick by which we may refer to various degrees of loudness. Fig. 23-13 shows several of these measurements on the standard decibel scale. These decibel ratings are obtained by measuring the intensity of the sound waves and by using the formula: *Sound intensity in decibels* $= 10 \log_{10} (I/I_o)$ where I is the intensity being measured and I_o is the standard sound intensity. This standard is usually selected as the weakest 1000 cycle tone that can be heard by a normal ear in a silent room. This is a sound intensity of 10^{-16} watts per square centimeter. Since the logarithm of one is zero the standard level is expressed as 0 on the decibel scale. The decibel scale is a

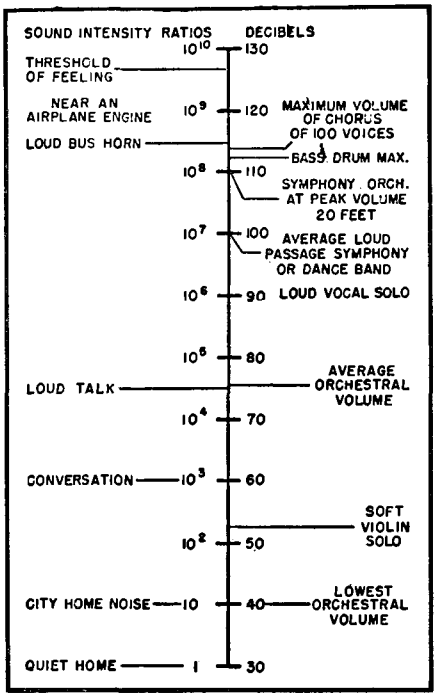

Fig. 23-13. Loudness levels of everyday sounds shown in db and in sound intensity ratios.

ratio scale and this is especially useful in loudness measurements because the ear responds to sound intensity in approximately a ratio function. See Chapter 8. That is, each time the sound level doubles in intensity it sounds approximately like an increase in equal steps of loudness. Thus an increase in sound intensity from 35 to 40 decibels sounds about the same as an increase from 55 to 60 decibels. In both cases the sound power increases by a ratio of about 3 but the actual power increase is 100 times greater in the second case.

Fig. 23-13 shows the relationship between the sound intensity in acoustic power ratio versus the decibel notation. The graph covers a range of 10 billionfold in sound pressures, from 30 decibels, the sound level of an average quiet home, to 130 decibels, the threshold of feeling or pain. Note the decibel ratings of the different sound levels that an audio system will be called upon to reproduce and the tremendous sound intensity ratios which this represents. It should be remembered that most of these sound measurements have been made with sound instruments which have a certain time lag. With complicated sounds the instantaneous sound pressure may be considerably higher. Engineers generally recommend that a system be capable of producing sound levels 6 decibels above the maximum sound meter readings. In Fig. 23-13, 113 decibels is the loudest musical sound measurement made, but instantaneous sound peaks may extend to 120 decibels and this safety margin should be kept in mind.

How loud should an audio system sound? In its design it must be planned for the maximum level that will be required. Most home radios reproduce music at about 20 to 40 decibels lower than the original sound source. Of course it makes a difference if the music is to be a background for conversation or if it is an occasion for serious listening or dancing. High fidelity and music fans often listen at normal volume levels even though the program is not always played that way. Dance bands and symphony orchestras have a characteristic sound because people enjoy that kind of loudness and most listeners have similar preferences when low distortion audio is available and listening conditions permit. Normal volume level is not the same thing as putting a symphony orchestra in a small living room. That would be much too loud. We simply want to recreate the loudness heard in the symphony hall in the living room. Naturally much less acoustic power will be required. In reproducing music at lower-than-normal levels there are not the savings in power requirements that might be expected. This is because of the increased bass boost needed for compensating the loss in aural sensitivity to bass notes at low volumes. The *Fletcher-Munson* curves show that if a musical passage, normally heard at an 80 decibel level, is reproduced at a 40 decibel level about 30 decibels of bass boost at

50 cycles is required for balanced listening. Since the bass tones contain much of the peak power this 40 decibel reduction in listening level will allow a reduction in power requirements of only 10 decibels. Normal loudness levels are, therefore, a reasonable requirement for high quality audio equipment designed for listening to music. For other purposes different loudness requirements must be met and these will have to be decided by the designer. The graph will aid in calculating power requirements for any sound level.

In the open air sound intensity diminishes with the distance from the source of the sound but in a room or small hall there is a great deal of reflection so that a source of sound builds up the loudness to a fairly uniform level. The ability of the sound source to produce a given sound intensity in a room depends on the size of the room and the amount of sound reflection or absorption in the room. The properties of a room affecting the reflection or absorption of sound are measured by the reverberation time and were previously discussed. The reverberation time of most living rooms is within ⅓ of a second to 1 second. Small halls may go up to 2½ seconds. Values of about ½ to 1 second are considered quite good acoustically for living rooms or small halls.

There is a simple method for calculating the reverberation time of a room by summing the effective absorption areas of the entire room. Each area of the room of different absorption surfaces is multiplied by the coefficient of absorption for that material and the total for the entire room is obtained and is called A. The reverberation time in seconds is therefore: $T = .05V/A$ where V is the volume of the room. The table, Fig. 23-14, shows a typical calculation of this sort. This calculation was made on a room to estimate the amplifier requirements.

It is possible to make a shrewd guess of the reverberation time of a room with a little practice at clapping and listening. The method is to make sure the room is quiet, clap the hands loudly and sharply and listen for the time of die-away. Careful listening will reveal a noticeable time of die-away even in a heavily draped room. It is surprising how different rooms can be in this respect. A stop watch is helpful in learning to estimate fractions of a second. The clap should be loud at about 90 or 100 decibels. Since the noise level of the room will be about 30 or 40 decibels the sound will be masked by the room noise after it has dropped about 60 decibels or the standard one millionth of its original loudness. Check your first listening estimates against the set of calculations shown in Fig. 23-14.

ABSORPTION COEFFICIENTS

Glass	.025
Plaster, Brick, Linoleum	.03
Wood Panel	.08
Carpets, Rugs	.40
Draperies, Upholstered areas	.50
Wood Chairs, Small Tables (each)	.3
Persons (each)	4.0

$T = .05V/A$

T = Reverberation time in sec.
V = Volume of room in cu. ft.
A = Absorption power of room in effective sq. ft.

EXAMPLE

Small living room (13′ x 16′ x 9′)	
Plaster (1061 sq. ft. × .03)	31.8
Wood areas (56 sq. ft. × .08)	4.0
Carpet area (120 sq. ft. × .40)	48.0
Draperies and upholstery (57 sq. ft. × .50)	28.5
Wood chairs and small tables (5 × .3)	1.5
Persons (3 × 4.0)	12.0
	125.8

$T = .05\ (13 \times 16 \times 9)/125.8 = .75$ sec.

Fig. 23-14. The calculations of reverberation time.

The power required to produce a loudness or sound intensity of 120 decibels is: $P = 0.00012\ V/T$ where P is the power in watts and V is the volume of the room in cubic feet and T is the reverberation time in seconds. Other sound intensities require proportionately different power levels. The power referred to in this equation is the acoustic power, the sound power actually put out by the speaker, not the power put into the speaker. In the room used in the calculations of Fig. 23-14 the acoustic power required to produce this sound level of 120 decibels is: $P = 0.00012 \times 1872/0.75 = 0.30$ watts.

Loudspeaker Efficiency

Speaker systems differ a great deal in efficiency, covering a range of about 2 to 40%. Few speaker manufacturers specify the efficiency of their speakers in a way which allows a calculation of power input to acoustic output but a little experience on this point can aid in making estimates. If one is fortunate to live in a city with a good comparative speaker listening studio it is possible to prepare a list of estimated efficiencies. Play some music and switch back and forth between two speakers, one with a known efficiency and, with an attenuator calibrated in decibels, cut the level of one until they are equal. The decibel attenuation allows a simple calculation of efficiencies. The speaker enclosure affects the efficiency and comparisons should be made while the speakers are housed in the type of cabinet which you expect to use.

As a general rule the more expensive the speaker the higher its efficiency, but this is not always true. Large magnets and light voice coils increase efficiency. Unfortunately good bass response does not go with light voice coils and diaphragms. Efficiency is also improved by good coupling of the speaker with the air as in horn systems and bass reflex cabinets. Standard speakers in the $10 class are generally about 2 to 3% efficient. Wider range speakers costing up to about $30 are generally not more efficient, the extra cost usually going into better bass and high frequency response. A number of speakers in the $40 to $70 class are about 4 to 6% efficient. These usually have magnets of 2 or 4 pounds as compared with ounces in the lower cost models. Higher efficiencies are obtained on some types of speaker systems using horn loading. The *Klipsch* corner horn system claims an efficiency of the order of 30%.

To return to the example shown in Fig. 23-14, the room is to be equipped with a coaxial speaker of good efficiency in a bass reflex cabinet. An efficiency of 5% is estimated for this model and so the electrical power calculated to produce the sound intensity of 120 decibels is: *Electrical power = Acoustic power/ Speaker efficiency; Pe* = .30/.05 = 6 watts.

It is informative to calculate the power that will be used in this installation under different listening levels. At 113 decibels (top loudness of a symphony orchestra) the electrical power is 1.2 watts. Of course the instantaneous peaks may be above this level by a 6 decibel factor, or at the 6 watt output already calculated. The average loudness of a symphony orchestra will use only about a thousandth of a watt and lower volume levels will be down to a millionth of a watt and less.

Assume that a 10 watt amplifier would suffice for this installation. Output measurements of the amplifier at various loudness levels are made and readings obtained, for example, as follows:

	Calculated	*Measured*
Loud symphonic peak	1.2 w.	.6 w.
Average loud passage	.1 w.	.08 w.
Average music	1 mw.	2.4 mw.

The calculations outlined can be performed on the simple nomograph shown in Fig. 23-15. The method is as follows. Select the loudness level wanted for the room in question. Place a straightedge on this point on line 1 and also on the point on scale 2 corresponding to the volume of the room. Mark the crossing of the straightedge on line 3. Connect this point to the reverberation time of the room on scale 4. The intersection on scale 5 gives the acoustic power required. To change this to electrical output connect the point on scale 5 to the speaker efficiency on scale 6. The intersection on scale 7 shows the electrical power required. The right hand of the scale reads in watts and the left hand side gives the answer in decibels with a zero reference of .006 watts.

This nomograph has been used in estimating power requirements in a number of different applications. It has proven

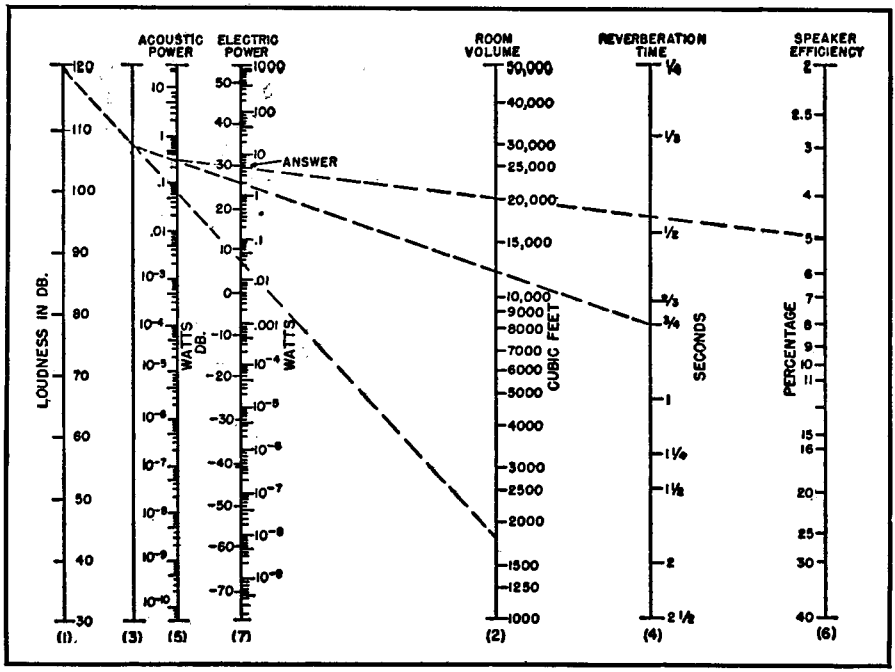

Fig. 23-15. Nomograph for calculating loudness and power requirements of sound systems.

to be very useful and even more educational. The limitations of the graph are the estimates involved in the reverberation time and the speaker efficiency. These factors must be used in any system of figuring power requirements plus an added safety factor which must be large enough to cover all contingencies. However, by the methods described it is usually possible to come within 50% of the actual power required.

It is amazing the tremendous range of power which an amplifier has to deliver. Peak power is needed only a very small fraction of the time. The average power required is only about a thousandth of the peak power. Amplifiers must have the needed reserve power for those times when musical peaks occur, power must be clean and low in distortion or else the thrill of musical volume is supplanted by a sound causing a wince and a shudder. A good audio system must be designed around the power requirements of the installation if it is to be free from overloading on the one hand or overpowered with resulting extra costs on the other.

REFERENCES

Fidelman, D. "Measurement of Studio and Room Acoustics"; Radio-Electronic Engineering, Vol. 14, Nos. 1 and 2.

Mason, C. A. & Moir, J. "Acoustics of Cinema Auditoria"; J. Inst. of Electrical Eng.; v. 88, part III, p. 175-190; Sept. 1941.

Mois, J. "Acoustics of Small Rooms and Studios." Electronics, p. 286, Feb. 1945.

Bolt, R. H. "Studio Acoustics"; Radio-Electronic Engineering; p. 5-7 Dec. 1945; p. 8-10, Jan. 1946.

Mitchell, J. A.; "Loudness and Power in Audio Systems," Radio and Television News, Feb. 1951, p. 52.

Hausmann & Slack; "physics," Chapters 21, 22, D. Van Nostrand Co.

Smith, F. L.; "Radiotron Designer's Handbook," Third Edition, The Wireless Press.

"Frequency Range and Power Considerations in Music Reproduction," Jensen. Technical Monograph No. 3, Jensen Mfg. Co.

Klipsch, P. W.: "The Klipsch Sound Reproducer," FM-TV Magazine, Sept. 1947.

Olson, H. F.; "Elements of Acoustical Engineering" Second Edition, D. Van Nostrand Co.

CHAPTER 24

Tuners (AM-FM)

The design features of radio tuners capable of high quality reception for home or professional recording or reproducing systems.

● Basically, tuners have several advantages over conventional radio receivers. Among these are a lower signal-to-noise ratio, wider frequency range and detector circuits free of distortion, intermodulation and harmonics. Tuners, either for AM, FM or both, may be simple and basic in design or may include many worthwhile features such as built-in preamps, pre and post equalization, bass and treble tone control, tuning indicators, filters for adjacent channel interference elimination and many other refinements.

Several representative tuners will be discussed. The first three examples are of units that may be constructed by the audio experimenter or technician with little effort. The commercial units include all or most of the essential features for tuners capable of the finest in AM or FM reception and will serve as a guide for custom installers of sound systems or recording studios. Space does not permit a complete listing of the many AM-FM tuners now available—hence our discussion will include only a few representative units.

WIDE RANGE BANDPASS CRYSTAL TUNER

This simple tuner, designed for "local" reception, is capable of excellent performance over the entire broadcast band. There is nothing tricky or unusual about the circuit. It is one of the many well-known bandpass networks with which radio engineers are familiar. The characteristics of such a network are a relatively "flat top" for uniform response over the desired channel and very steep sides or "skirts" to provide good selectivity between adjacent signals. Reference to Fig. 24-1 will show that special so-called bandpass coils have not been used. Instead high "Q" litz wire rf coils, possessing a primary and secondary winding, have been incorporated into the circuit. The primary reason for this is that coils designed for trf bandpass tuners consist of a single winding usually intended to work into an infinite impedance detector to avoid loading down the network.

In the circuit shown in Fig. 14-1 severe loading of the output terminals of the bandpass network is avoided by utilizing the *J. W. Miller*, 242 rf coil, T_3 backwards; that is, the primary is used as the output winding and carries the crystal current of the 1N34. This provides a stepdown from the high impedance of the network to the relatively low impedance of the crystal circuit. While the turns ratio and coupling coefficient are not ideal for the purpose, they are sufficient to give good results. A negative mutual coil T_2 and condenser C_5 complete the bandpass circuit.

Condenser C_5 must be .015 μfd even if two condensers of other values have to be paralleled to get this value. Two pre-

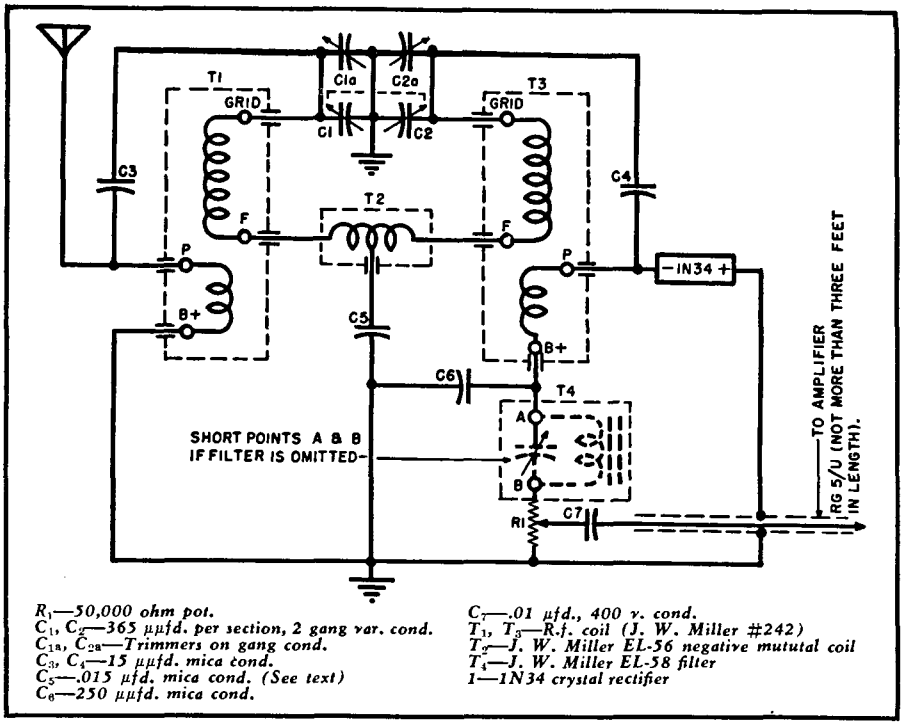

R_1—50,000 ohm pot.
C_1, C_2—365 μμfd. per section, 2 gang var. cond.
C_{1a}, C_{2a}—Trimmers on gang cond.
C_3, C_4—15 μμfd. mica cond.
C_5—.015 μfd. mica cond. (See text)
C_6—250 μμfd. mica cond.
C_7—.01 μfd., 400 v. cond.
T_1, T_3—R.f. coil (J. W. Miller #242)
T_2—J. W. Miller EL-56 negative mututal coil
T_4—J. W. Miller EL-58 filter
1—1N34 crystal rectifier

Fig. 24-1. Schematic diagram of a bandpass type tuner, using a crystal detector.

cautions are necessary to avoid hum pickup from random fields. A well bonded bottom plate must be used on the chassis and a double shielded cable, such as RG5/U, must be used to couple the tuner to the amplifier input. With the measured hum level of many good amplifiers down 65 db and a gain sensitivity of 125 db, such measures are necessary to secure the performance of which the tuner is capable.

Unlike the familiar crystal set, the tuner described is not intended to drive a pair of earphones. Networks of the bandpass type have a given insertion loss, and hence require quite high gain amplifiers to be used in conjunction therewith. The particular coils used, when placed in the circuit shown in Fig. 24-1, only give satisfactory 18 to 20 kc "flat top" response when from 30 to 50 feet of wire is used for an antenna. This is not due to the "pickup" efficiency of such length of wire, but is due rather to the reactance that this antenna places across the input terminals of the network.

Note that 18 to 20 kc selectivity has been mentioned. Neither this tuner nor any other really high-fidelity receiver can separate stations operating closer than this, for such bandwidth is needed for high program quality transmission.

So called "monkey chatter" may be noticed when listening to one or more stations in a given locality due to interchannel interference. This effect may also take the form of a very high pitched ringing sound. If this interference is objectionable, T_4 should be added to the circuit. This filter is an iron core, parallel-tuned circuit, which should be tuned while listening to a signal until the "chatter" is eliminated.

THE TRF TUNER

This AM tuner is capable of giving a good account of itself and will furnish the necessary high quality from local

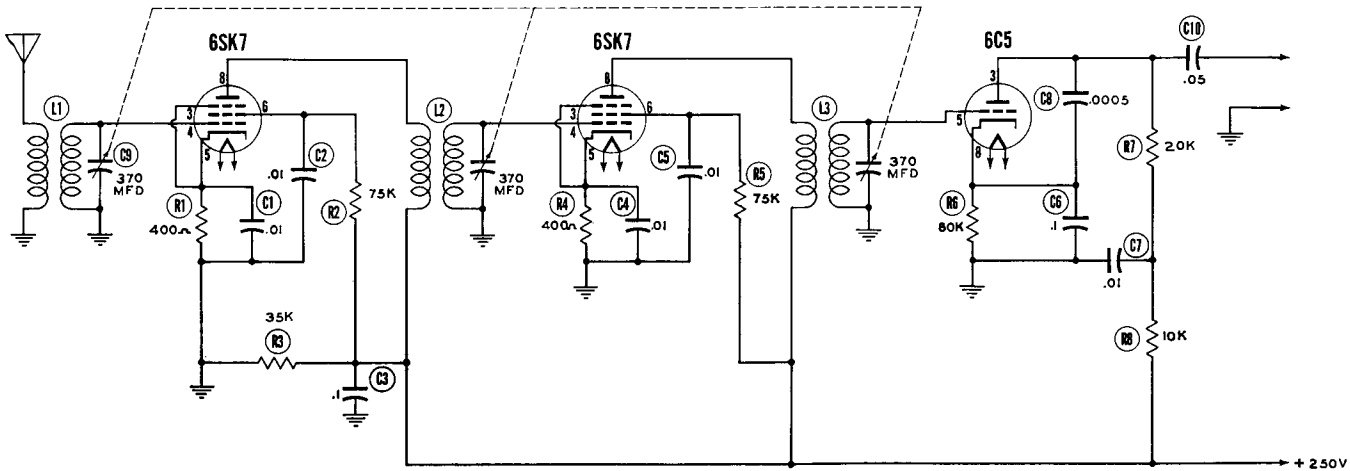

PARTS LIST

R_1, R_4—400 ohm ½w
R_2, R_5—75,000 ohm, ½w,
R_3—35,000 ohm ½w,
R_6—80,000 ohm ½w,
R_7—20,000 ohm ½w,
R_8—10,000 ohm ½w,
C_1, C_4—.01 mfd @ 200 w.v., tubular condenser
C_2, C_5 C_7—.01 mfd @ 400 w.v. tubular condenser
C_3—.1 mfd @ 400 w.v. tubulars
C_6—.1 mfd @ 200 w.v. tubular condenser
C_8—.0005 mfd mica condenser
C_9—3 section variable condenser (370 mmfd ea.)
C_{10}—.05 mfd @ 400 w.v. tubular condenser
L_1—Antenna coil
L_2—R.F. coil
L_3—R.F. coil

Fig. 24-2. Schematic of a conventional TRF (Tuned radio frequency) Tuner.

broadcast stations so necessary for good recording.

The chief advantage of using the TRF (Tuned Radio Frequency) type of circuit, Fig. 24-2, is that the bandpass characteristics of the average TRF transformer is such that the over-all selectivity is just enough to include practically the complete 10 kc channel (5000 cps) response. Many superhet receivers, on the other hand, are too selective and therefore do not include the full bandwidth of the carrier, and as a result, many desirable high frequencies are lost. By limiting the selectivity of the tuner and by using a very short antenna, it is possible to receive local stations without interference from outside transmissions.

The resulting drop in background noise means that we will be able to obtain better recordings. Last, but not least, the cost comparison between the TRF and the superhet types. As a rule, the TRF is the least expensive to construct and is far easier to align, as no test oscillator need be used if one has an assortment of local AM signals to use a reference points in setting the various trimmers.

The tuner consists of a total of three tubes. The first (antenna stage) uses a 6SK7. Likewise the second (rf stage). The detector is a 6C5 and utilizes the conventional power detector type of circuit. This type of circuit is insensitive to weak signals and therefore is ideally suited to the purpose. It has an output that may connect directly into practically any conventional amplifier. The 6C5 was chosen in preference to other types; first of all because it was obtained easily and secondly, due to its low plate impedance it may be connected to conventional potentiometer type controls of either medium or high resistance values. Most amplifiers have a phono input. A few make provisions for more than one. The tuner may be connected directly to such an input where sufficient gain will be had for maximum power output of the amplifier.

Inasmuch as this tuner occupies very little space, it is ideally suited for mounting into conventional portable phonograph cases. In one of our own applications, we added one into a portable recorder and took necessary filament and plate voltage from the recording amplifier. Almost any B voltage will be sufficient, best results being obtained with approximately 250 v.

Alignment

There is nothing mysterious or tricky when it comes to aligning a TRF tuner of simple design. No automatic volume control has been used, which simplifies the adjustment.

String a length of wire of approximately 20 feet anywhere within the room and connect it to the antenna lead of the coil. Allow the tuner to reach operating temperatures and then tune for whatever station in your vicinity operates on the low frequency end of the broadcast spectrum. This station should preferably have a frequency somewhere between 550 and 650 kc. After the station has been tuned to loudest signal proceed to adjust each trimmer of each condenser section for loudest response. It is good practice to "rock" the condenser back and forth over the signal during the process of alignment.

Repeat the above procedure at the high frequency end on a station having a frequency somewhere around 1500 or 1200 kc. Continue to rock the condenser during these adjustments and finally tune in the weakest station that you are able to find and make final slight adjustment to the trimmers until the station is received with greatest clarity and volume. If these adjustments are made properly, the tuner will track over the entire range and no further adjustments will be required. Finally, the antenna should be shortened until it will receive the weakest station with satisfactory volume and not any more.

The performance of the tuner will be satisfactory only in areas served by local AM stations. For best results—one should employ commercial units with provision for both AM and FM, avc and other refinements.

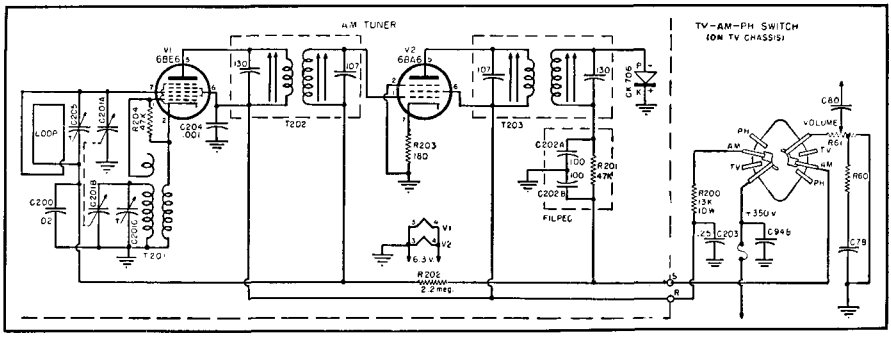

Fig. 24-3. Schematic of a two tube compact AM receiver as used in the Raytheon RC-1720 TV chassis.

Miniature Superhet AM Tuner

A unique feature of the *Raytheon* RC-1720 television set is the inclusion of a tiny AM tuner. Fig. 24-3 shows the schematic and Fig. 24-4 reveals the compact assembly of the unit. Only two tubes in conjunction with a germanium crystal detector are employed, a 6BE6 converter and a 6BA6 intermediate amplifier.

The AM tuner gets its filament and plate voltage from the TV power supply. The audio output is fed to the grid of the TV audio amplifier thru condenser C80 after the volume control R61. This is a superheterodyne circuit in its simplest form and its design lends itself to compact portable recorder units.

Operadio AM-FM Tuner

The *Operadio* Model 10A20 unit, Fig. 24-5, is of standard rack width and consists of a combined AM-FM tuner together with self-contained power supply on one chassis-panel assembly. Reception of FM signals in the standard 88-108 mc band or of AM signals in the standard 550-1600 kc band, may be chosen by means of the selector switch provided.

Four front panel controls are provided from left to right as follows: Tone control combined with ac power switch, volume control, tuning control, and "AM-FM" selector switch. These controls are located directly below an indirectly lighted, slide rule type dial, measuring 10″ long x 4″ high. The rf input circuit is designed for connection to an antenna of the folded dipole type thru a standard 300 ohm transmission line. The af output circuit is designed to deliver approximately 1 volt rms into an external load of 27k ohms.

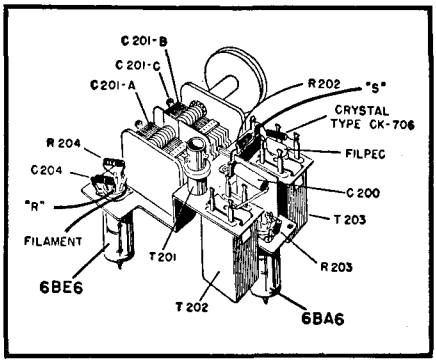

Fig. 24-4. Details show compactness of AM tuner sub-chassis.

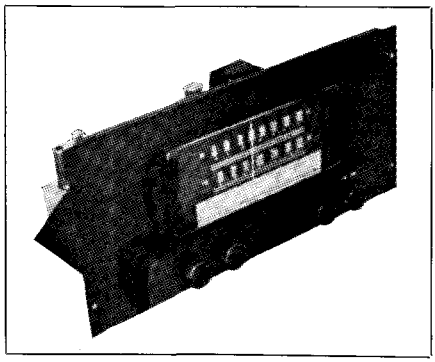

Fig. 24-5. Operadio model 10A20 AM-FM tuner. (Courtesy Operadio)

Specifications

1. Output voltage—approx. 1 volt rms into 27k external load.
2. Antenna impedance—300 ohms.
3. Recommended load impedance—27k ohms minimum.
4. Power supply:
   A. Input—115 volts at 60 cycles.
   B. Power consumption—60 watts.
5. Tube complement—6BA6 AM-FM mixer, 6C4 AM-FM oscillator, 6BA6 AM-FM input if, 6BA6 FM second if, 6BA6 FM third if, 6AL5 FM detector, 6AT6 AM detector and af amplifier, 5Y3GT rectifier.
6. Controls—tone, volume, tuning and AM-FM selector switch.
7. Physical dimensions—19″ wide, 8¾″ high, 8½″ deep.
8. Connectors required:
   A. Antenna input—none (screw-type terminal strip provided)
   B. Af output standard octal plug (connect hot lead to pin No. 5, ground to pin No. 1).
9. Standard finish—brown mahogany hammerloid.

Espey AM-FM Tuner Chassis

The *Espey* Model 512, Fig. 24-6, is a self-powered AM-FM tuner. The FM circuit includes a tuned rf Amplifier stage, 2 stages of high gain intermediate frequency amplification and an advanced design ratio detector circuit which provides low noise level between stations, freedom from AM interference, ease of tuning and ample gain for satisfactory operation with an indoor antenna in most urban locations. The AM circuit includes a tuned rf Amplifier for improved selectivity and freedom from spurious responses.

Line voltage is made available at two outlets at the rear of the tuner, these are actuated by the tuner on-off switch. To facilitate custom installations plate and heater voltages are made available at a utility socket mounted in the tuner. This is suitable for powering auxiliary preamplifiers as used with variable reluctance type pickups.

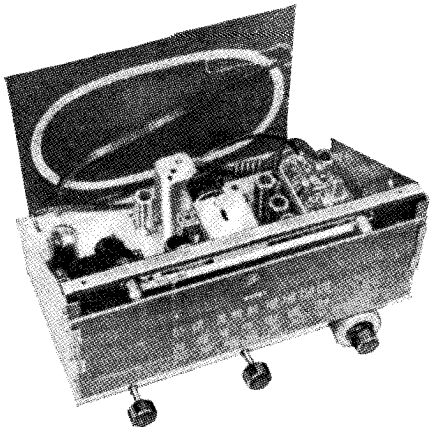

Fig. 24-6. The Espey model 512 FM-AM tuner chassis. (Courtesy Espey)

The large "slide rule" type dial is illuminated by two pilot lights which also provide illumination for the red plastic dial pointer. A high ratio flywheel drive on the tuning condenser provides smooth tuning throughout the range of the receiver.

The tuner has two antennas; a Loop antenna for Standard Broadcast and a Folded Dipole antenna for the FM band.

Provision is made for connecting an external phonograph pickup to the tuner audio system for use with all types of amplifier installations. Two audio output channels are provided, one at high level, the other at low level; both are controlled by the tuner volume control.

Specifications

1. AC Superheterodyne AM-FM tuning circuit. Standard Broadcast—535 to 1720 kc. FM Band—88 to 108 mc.
2. Frequency Modulation Circuit, drift compensated.
3. 9 tubes, plus Rectifier and electronic tuning indicator.
4. 3 dual purpose tubes give added performance.
5. Automatic volume control.
6. 6 gang tuning condenser.
7. High Fidelity AM-FM reception

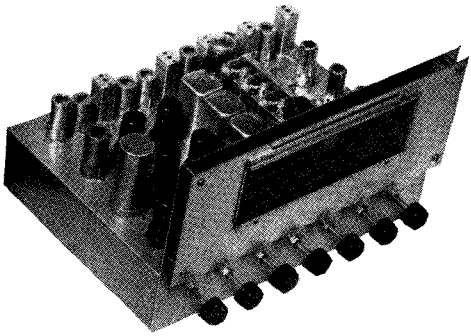

Fig. 24-7. The Collins 46-D FM-AM tuner. (Courtesy Collins Audio Products)

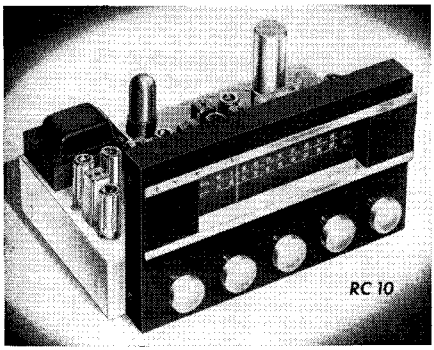

Fig. 24-8. Radio Craftsmen RC-10 FM-AM tuner with built in compensated preamp.

8. Indirectly illuminated "slide rule" dial.
9. Antenna for AM and Folded Dipole antenna for FM reception.
10. Provision for external antennas.
11. Wired for phonograph operation.
12. High and low level Audio Output.
13. Utility socket provides power for magnetic reluctance pickup preamplifier.

Power requirements 105/125 volts ac. Power consumption 66 watts. Chassis Dimensions: 13½″ wide x 8½″ high x 9″ deep.

Net weight: 14 lbs.

Tube Complement

1 6BA6 AM-rf Amplifier tube.
1 6BA6 FM-rf Amplifier tube.
1 6BE6 AM Oscillator Mixer tube.
1 6SH7 FM Detector Driver tube.
1 6SG7 if Amplifier tube.
1 6AL5 FM Detector tube.
1 6C4 FM Oscillator tube.
1 6BE6 FM Mixer tube.
1 6SQ7 AM Detector Audio Amplifier tube.
1 6U5 Electron Ray Tuning Indicator tube.
1 5Y3GT Rectifier tube.

Collins FM-AM Tuner

Nineteen tubes are used in the *Collins* 46-D, *Fig.* 24-7, providing wide band AM reception and complete *Armstrong* FM.

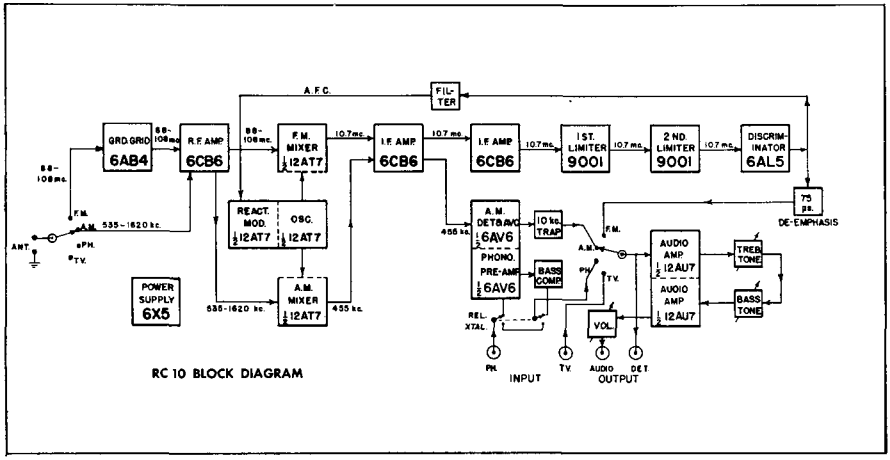

RC 10 BLOCK DIAGRAM

Fig. 24-9. Block diagrom showing switching arrangement employed in the Craftsman RC-10 tuner.

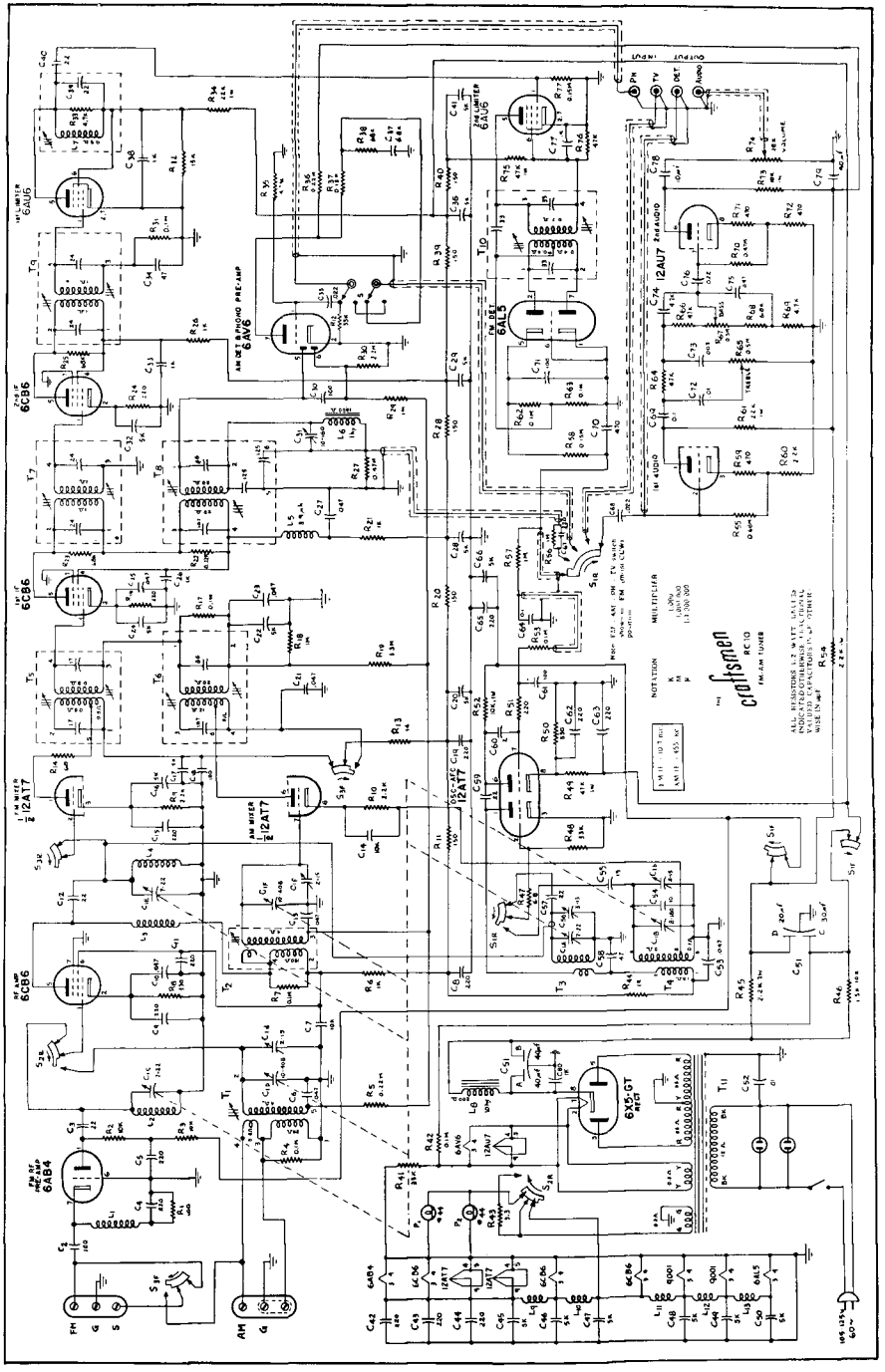

Fig. 24-10. Complete schematic of the RC-10 AM-FM tuner preamp.

For convenience and simplified operation, all controls are located on the tuner chassis, including variable bass and treble tone controls.

A tuning eye (6AL7-GT) is used for both FM and AM allowing precision tuning of the FM circuits for high fidelity reception. The audio amplifier stages have sufficient gain to allow a wide variation of bass and treble settings and the 46-D has high impedance output permitting its use with other amplifiers supplied with phonograph input.

Significant features of the 46-D include a squelch circuit for FM, eliminating inter-station noise; fidelity obtainable—to 10,000 cycles on AM and 15,000 on FM; a provision for television input to utilize high fidelity audio and provision for either reluctance type or crystal phonograph cartridges.

Specifications

FM: Tuning range—88 mc to 108 mc.
Sensitivity—10 microvolts.
Image ratio—500 to 1.
If Frequency—10.7 mc.
If bandwith at 6 db down 200 kc.
Antenna matches 300 ohm line.
New miniature tubes used throughout.
Voltage stabilization in rf circuits.
No frequency drift.

AM: Tuning range—530 kc to 1650 kc.
Sensitivity—8 microvolts.
20 kc flat-top response.
Four gang tuning condenser.
Delayed, amplified avc.
Chassis, size 11″ deep x 14″ across front x 8″ high.
Weight—approximately 10 pounds.
Edge lighted slide rule dial.
All interconnecting speech and power cables supplied.
One antenna system required—FM dipole and lead-in provide AM antenna.
Current requirements—6.3 volts ac at 5 amperes and 350 volts dc at 100 milliamperes.

The Craftsmen RC-10 FM-AM Tuner

This is an improved version of the *Radio Craftsmen* RC-8 tuner. The RC-10 tuner, Fig. 24-8, provides, in one compact assembly, many features that are ideally suited to high quality music systems for custom installation or for applications of recording programs "off the air."

The block diagram, Fig. 24-9, shows the basic circuitry that provides switching facilities of several input signal sources to an equalized preamplifier and self-contained bass and treble tone control. Automatic frequency control on FM eliminates drifting during the initial warm-up period and thereby acts as a hold control for tuning. With the exception of the rectifier, all tubes are miniatures.

The complete schematic of the tuner is shown in Fig. 24-10. Eleven tubes, plus rectifier, are used as follows: A 6AB4

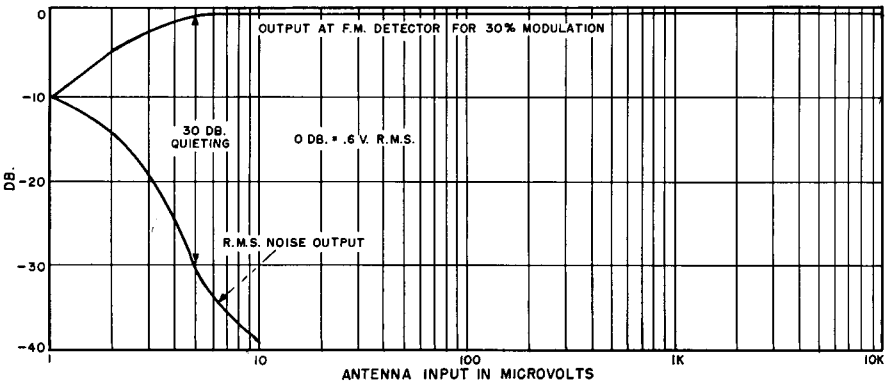

Fig. 24-11. FM limiting characteristics.

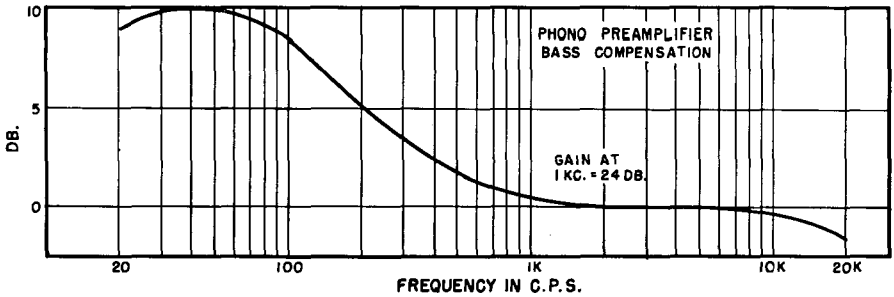

Fig. 24-12. Phono preamplifier characteristics.

FM rf preamp, 6CB6 rf amplifier, 12AT7 FM mixer, 12AT7 oscillator and automatic frequency control, 2-6CB6 if amplifiers, 2-6AU6 (or 9001) limiters, 6AL5 FM detector, 6AV6 AM detector and phono preamp, 12AU7 audio amplifier and 6X5GT rectifier.

A sensitivity of 5 microvolts on FM for 30 db. quieting, Fig. 24-11, and a sensitivity of 5 microvolts on AM for 0.25 volts output at either detector or audio amplifier provides a usable signal. The dual triode audio amplifier furnishes up to 3 volts output at less than 1% distortion.

The phono preamp characteristics, Fig. 24-12, show a 24 db gain plus 10 db bass compensation. Continuous tone controls permit full attenuation or boost of a wide range. The treble is variable to a 9 db boost or 15 db attenuation at 10,000 cycles. The bass provides a 12 db boost or 10 db attenuation at 70 cycles. See curves, Fig. 24-13.

A 10 kc filter in the AM circuit reduces interstation interference in the form of whistles or monkey chatter.

Audio may be taken at the FM or AM detector output to feed a recording channel. This bypasses the entire RC10 audio system including tone and volume controls and permits using the RC10 audio amplifier output to feed a monitor amplifier and loudspeaker.

Recording applications are further described in Chapter 26.

Specifications

Tube Complement: 11 tubes, plus rectifier—6AB4 FM rf preamp, 6CB6 rf amp., 12AT7 mixer, 12AT7 osc. and afc., (2) 6CB6 if amp., (2) 9001

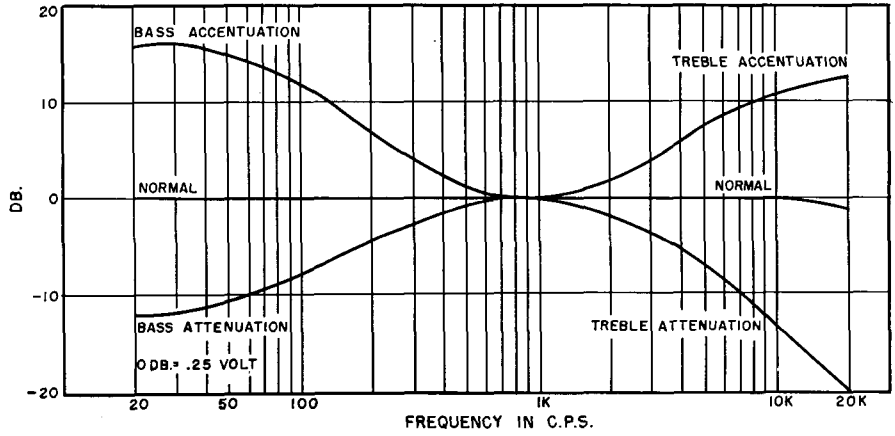

Fig. 24-13. Audio (tone control) characteristics.

limiters, 6AL5 FM det., 6AV6 AM det. and phono. preamp., 12AU7 audio amp., 6X5GT rectifier.

Controls: Bass, Off-On-Volume, FM-AM-PH-TV selector, Tuning, treble.

Antenna: FM-300 ohm or 72 ohm input. Built-in antenna also provided. AM-high or low impedance transformer input. Low-noise loop also provided.

Sensitivity: FM-5 microvolts for 30 db quieting. AM-5 microvolts for 0.25 volts output at either detector or audio amplifier.

FM Drift: Negligible with Automatic Frequency Control. Without afc, ±20 kc after 10 sec. warmup.

Output: Capability up to 3 volts at less than 1% distortion at 5000 ohms impedance. For use with either high or low gain amplifiers with input impedance of 25,000 ohms or higher. Connection direct from detector also provided.

Tone Compensation: Bass variable up to 12 db boost or 10 db cut at 70 cps. Treble variable up to 9 db boost or 15 db cut at 10,000 cps.

Phono Preamplifier: 24 db gain plus 10 db bass compensation.

Intermediate Frequencies: FM—10.7 mc; AM—455 kc.

Bandwidth: FM—190 kc; AM—8.5 kc.

AM Interstation Whistle Filter: 25 db rejection at 10 kc, 1 db at 7 kc.

Power Consumption: 105-125 volts, 60 cps, 55 watts.

Shipping Weight: 16 lbs.

Dimensions: 13½" x 9½" x 7" high.

CHAPTER 25

Speech Input Systems

The Components, Organization and Characteristics of a Typical Audio System for High-Fidelity Broadcasting and Specifications of Commercial Speech Equipment.

● Refinements in radio broadcasting techniques which substantially increase the operating demands on both network and individual studio facilities have focused attention anew on that vitally important portion of the broadcasting or telecasting plant—the Speech Input equipment.

To attempt to point out specific deviations from previous practice which are inherent in the use of these new techniques would, in most instances, lead the engineer onto controversial ground. Moreover, such a discussion would be meaningless to the newcomer to audio who may lack background in basic speech input principles.

Instead, it is our purpose here to review in outline form the principal components effects and produced in a typical *Western Electric* speech input system for TV, AM and FM broadcasting, so that the neophyte may gain a broad perspective of how such systems operate and so that the expert may draw from it such information regarding new developments as he may find applicable to his own problems.

The fundamental purpose of a Speech Input or Audio System for broadcasting is to convert sound into electrical energy and to prepare this energy for effective transmission over telephone lines or through the air in such a manner that the original sound can be faithfully reproduced at many distant points.

Basic components required for achieving this objective include:

1. A microphone, or converting element.
2. A succession of vacuum tube amplifier stages, provided with progressively greater power handling capacity to raise the initially low level of converted sound energy in terms of units of gain and volume called decibels (db).
3. Control, checking and stabilizing devices, which are applied throughout the amplification process (a) to maintain proper strength and balance among all outgoing program elements and (b) to overcome noise and prevent tone distortion.
4. A means of transferring the prepared program energy to the circuit of the transmitting element with a minimum loss of signal strength and quality.

During the course of many years of practical experience in the allied fields of wire and radio sound transmission, engineers have developed fundamental audio circuits and circuit components in which optimum performance is combined with the greatest economy in equipment outlay. The advent of Frequency Modulation offered a further opportunity to apply an exceptional understanding of wide-frequency band transmission to the new, high fidelity require-

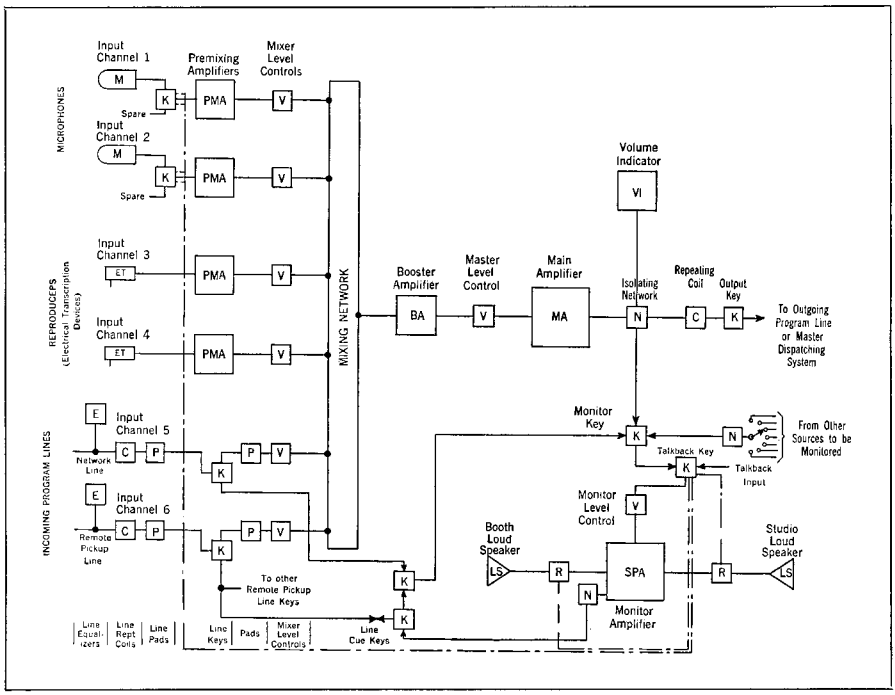

Fig. 25-1. Studio program production unit, showing types of facilities used. Quantities of inputs and other circuits will vary according to individual requirements. (Courtesy Western Electric)

ments of the radio industry, with the result that standard units now in the line transmit the full 30 to 15,000 cycle audio range faithfully, and are in every way suited to TV, FM and AM broadcasting.

For purposes of demonstration, we have summarized certain basic *Western Electric* ideas regarding the components, desirable operating characteristics and functions of a typical Speech Input Installation, including both the basic, or Program Production Unit and the Master Dispatching Equipment. Most of these concepts have at various times been incorporated into systems designed for major U. S. broadcasting stations.

Program Production and Dispatching

Fig. 25-1 outlines the basic structure of a typical six input studio Program Production Unit and shows the relative positions of the various recommended inputs, amplifiers, networks and controls. In Fig. 25-2 are diagrammed the units commonly found in a Master Dispatching Circuit through which the program normally passes on its way to the transmitting element. Figs. 25-1A and 25-2A demonstrate the successive energy levels of program input as it progresses through each section of this typical system—the depressions indicating the losses which occur, because of the nature of the circuit elements, or which are inserted deliberately to provide a margin of level control. The scale at the left of each of the last two drawings is graduated in dbm. (decibel level referred to power of 0.001 milliwatts)—the modern standard unit for measuring program energy level in audio frequency circuits. This unit coincides approximately in amount with the minimum amount of change in volume the trained listener can detect. For convenience a zero reference level has been arbitrarily set at 1 milliwatt. Values above this level are indicated in +dbm; values below are prefixed by a minus sign.

SYMBOL KEY SHEET

- RCT — RECTIFIER
- PMA — PRE-MIXING AMPLIFIER
- BA — BOOSTER AMPLIFIER
- MA — MAIN AMPLIFIER
- LA — LINE AMPLIFIER
- SPA — SPEAKER AMPLIFIER
- IA — ISOLATION AMPLIFIER
- GPA — GENERAL PURPOSE AMPLIFIER
- LS — LOUDSPEAKER WITH AMPLIFIER
- LS — LOUDSPEAKER
- PS — POWER SUPPLY (Heaters and Plates)
- B — BUZZER
- PATCHING CORD WITH PLUGS
- SINGLE CORD WITH PLUG
- OR C — REPEATING COIL
- CONTROL OR INDICATING CIRCUITS
- PROGRAM OR TALKING CIRCUITS
- OR T — TERMINATING CIRCUITS
- CH — CHAIR
- IN / OUT / OUT — DIRECTION OF TRANSMISSION
- DIAL FOR OPERATING DIAL SELECTOR EQUIPMENT
- E — EQUALIZER
- V — ADJUSTABLE VOLUME OR LEVEL CONTROL
- G — ADJUSTABLE GAIN CONTROL
- L — LAMP
- OR K — KEY (Contacts Unoperated Position)
- DOUBLE CIRCUIT JACKS (4 Jacks) WITH CIRCUIT NORMALED THROUGH
- DOUBLE CIRCUIT JACKS (2 Jacks) UNTERMINATED
- DOUBLE CIRCUIT JACKS (2 Jacks) TERMINATED
- SINGLE JACK
- D — COMBINED DROP SIGNAL AND JACK
- P — PAD
- M OR M — MICROPHONE
- OR R — RELAY (Contacts Unoperated Position)
- ET — TRANSCRIPTION TURNTABLE
- TD — TRANSDUCER
- TB — TALK-BACK
- S — ROTARY MULTIPOINT SWITCH
- K — INTERLOCKED MULTIBUTTON PUSH KEY
- R — INTERLOCKED RELAY SYSTEM
- VI — VOLUME INDICATOR
- N — NETWORK
- CB — CUSTOM BUILT SPEECH INPUT CONSOLE
- 25 — 25 TYPE SPEECH INPUT CONSOLE
- 23 — 23 TYPE SPEECH INPUT CONSOLE
- INDICATES FUTURE CIRCUITS OR EQUIPMENT OR EQUIPMENT NOT INCLUDED IN CURRENT PROPOSAL
- CIRCUIT LOOPED THROUGH POSITION OF FUTURE EQUIPMENT
- 1 2 3 4 — SIMPLIFIED REPRESENTATION OF MULTI-CIRCUIT CABLING — 1 2 3 4
- X / Y — INDICATES ALTERNATIVE CONNECTIONS
- DOT INDICATES TERMINAL OR CONNECTION, LACK OF DOT INDICATES NO CONNECTION
- S — INDICATES SERIES CONNECTION
- P — INDICATES PARALLEL CONNECTION
- SP — INDICATES SERIES PARALLEL CONNECTION
- HP — HIGH PASS FILTER
- LP — LOW PASS FILTER
- + — POSITIVE D.C. SIGNAL SUPPLY
- − — NEGATIVE D.C. SIGNAL SUPPLY
- DC — D.C. SIGNAL SUPPLY
- AC — A.C. POWER SOURCE
- CLOCK

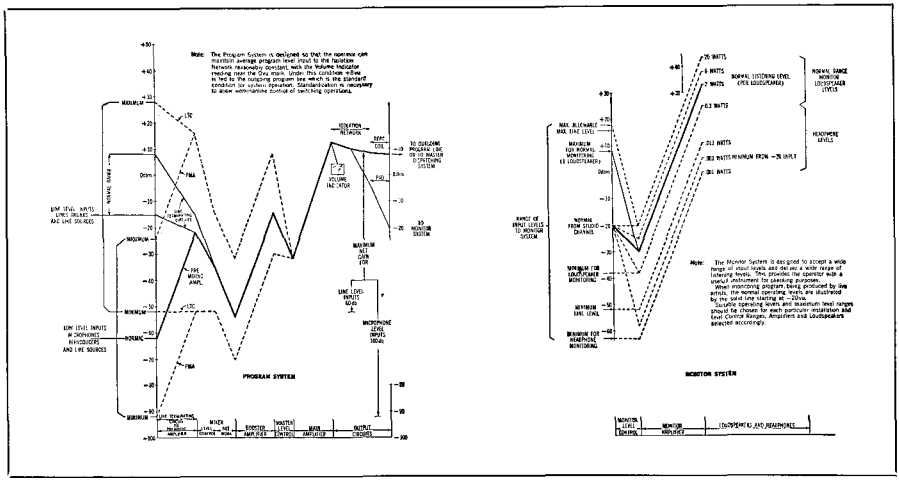

Fig. 25-1A. Typical level diagram of studio program production unit and studio speech input systems. (Courtesy Western Electric)

Program Production Unit

The initial component in any audio system is, of course, the MICROPHONE, of which two are shown as input sources in Fig. 25-1 (Channels 1 and 2). Microphones in common use for broadcasting (See Chapter 14), employ a movable element arranged to follow those vibrations in air which produce the sensation of sound when they act upon the ear. This element is usually a conducting coil or ribbon suspended so as to move freely in a magnetic field and which, as it moves, generates an electrical voltage across its terminals. Energy produced solely by the vibrations of sound waves is, of course, infinitesimally small. Engineers define it as in the order of .000055 watt for sound of normal conversational intensity originating at a distance of three feet from the microphone. Referring to Fig. 25-1A, it will be noted that, translated into terms of program level, this converted sound energy normally enters our typical Production Unit from one or more microphone sources located in an associated studio at approximately —62 dbm. Recorded program material which, by means of records, wire or tape, has been held in storage following its original conversion into electrical energy, is introduced into the system from one or more REPRODUCERS (Fig. 25-1, Channels 3 and 4) at approximately the same low energy level. At the foot of Fig. 25-1, two additional input sources are shown in the form of Incoming Program Transmission lines, dispatched from points outside of the studio (Channels 5 and 6). Since the normal level of transmission from remote points is about +8 dbm, the input from these sources normally enters the studio equipment at a relatively high level.

Program Blending

A most desirable objective obviously, is to merge the active input channels in our system into one, so that succeeding volume-producing and control operations can be applied to the blended program material with the greatest efficiency and the least amount of equipment. The program level at the output of the microphone and reproducer channels, however, is so low that the further energy losses which are apt to occur during the merging process would expose the transmission to noise generated in the circuit elements by interacting electro-magnetic fields or thermionic activity. Since disturbances in a speech input system are likely to be cumulative in ef-

fect, i.e., become disproportionately magnified as successive stages of amplification are applied, it is extremely important at this initial stage to offset these effects by amplifying the transmission before these disturbances can become detrimental. Accordingly, a series of PRE-MIXING AMPLIFIERS (preamplifiers) is employed, equivalent in number to the low level input sources on the chart, each of which raises the energy level in its particular channel by approximately 40 db.

The amount of increase, or "gain" as it is called, of each amplifier unit is always a fixed quantity unless subjected to further control. However, in these early stages of program preparation, this fixed gain may occur over different ranges extending to the maximum and minimum levels defined in Figs. 25-1A and 25-2A by the dotted curves. It is important therefore that a Pre-Mixing Amplifier (preamp) possess the ability to handle a higher output power than that called for under normal transmission conditions. An adequate margin of power handling capacity is accordingly provided in these, as well as in other types of amplifiers described herein, to permit faithful performance at the highest anticipated levels of program energy. Harmonic distortion, which otherwise might be produced by overloading the circuit, is thus held, in these units, to less than 1%. By the same token, output noise encountered in a more marked degree at points below normal input levels is reduced to a minimum by use of proper shielding against the action of surrounding magnetic fields and careful selection and construction of vacuum tubes and other component parts.

Returning to Fig. 25-1A, it will be noted that the levels of the incoming program lines have been dropped to approach those of the other program sources as they emerge from the Pre-Mixing Amplifiers. A portion of this overall drop in the line channels is produced automatically through the action of LINE EQUALIZERS which serve to compensate for attenuation occurring in the higher audio frequencies during the course of long lines transmission—and of LINE REPEATING COILS which isolate the audio equipment from direct current potentials built up over the line and aid in matching the impedances of the two circuits. The remaining portion of this loss however, is achieved by the use of adjustable volume controls or Line Pads. These latter circuit elements also possess frequency stabilization characteristics which are discussed in greater detail in a later section on impedance stabilization.

Level Controls and Indicators

At this point, all input sources are at about —22 dbm., and a sufficient level margin has been assured to permit joining the channels into a properly balanced, common output. The first step in this joining process is accomplished in the MIXER LEVEL CONTROLS, which provide variable loss characteristics for each channel so as to afford a means for rapid level adjustment. To show how this works, let us assume, for example, that Input Channel 1 carries the voice of a featured soprano, who is accompanied by an orchestra on Input Channel 2. In order to keep the singer's voice at a listening level proportionate to that of the orchestra, a loss greater than that occurring in Channel 1 is deliberately inserted on Channel 2. In this manner, an apparent gain is produced on Channel 1 so that the two channel levels can be blended into a realistic and naturally proportioned reproduction of the original program. Moreover, when desirable, special dramatic effects can be developed in the Mixer Level Controls which contribute substantially to the realism of the finished program. Intensive rehearsal, involving the artists, Control Engineer, and Program Producer, usually precedes the transmission of the final program to determine proper sound intensities, distances from microphones and the extent of the losses to be inserted in each channel in order to produce the desired results. Should actual transmitting conditions cause variations in the anticipated input levels, the range

of adjustment in the Mixer Level Controls should be adequate to permit compensation by rapid readjustment of the amount of loss provided for each program source.

Passing into the MIXING NETWORK, the six channels are merged into one by means of a complex circuit in which all branches (both input and output) are terminated and their impedances matched so that the transmission remains independent of the settings of the individual input controls. This procedure also operates to prevent frequency discrimination and excessive loss of program energy.

The action taking place in the Mixing Network causes some energy loss however (about 18 db for this particular circuit) and brings the average program level down to approximately —54 dbm (only 8 dbm above the level of the original input from the microphones). Hence, to bring the volume up to the point at which it is safe to apply further controls, a BOOSTER AMPLIFIER is required. For this purpose the same type of two-stage amplifier may be used as for the Pre-Mixing Amplifier, since the allotted gain (approximately 40 db) and power handling capacity of this unit is usually adequate for this application.

While at first glance it might appear that the gain provided by the Booster Amplifier might be supplied by adding an equivalent amount of amplification either to the preceding Pre-Mixing Amplifiers or to the Main Amplifier, which is the next major unit in the system, so that the Booster stage could be omitted entirely, experience has proved that this is seldom practical either from an economic or performance standpoint. For example, if more gain were added to the Pre-Mixing Amplifiers, each of the four pre-amplifying units in our illustration (Fig. 25-1) would increase substantially in both size and cost. In systems employing a larger number of microphone input channels, this cost factor would greatly over-shadow the outlay for the single extra unit represented by the Booster Amplifier. On the other hand, if this gain were to be added to the Main Amplifier, a further dilemma would arise. The Master Level Control, if located at the output of the Mixing Network, might reduce the transmission below the level of safety from thermionic disturbance. Conversely, if this control were to be applied at the output of the Main Amplifier, electronic interference might be induced in the low level mixer circuits as a result of the normal desirability for a close physical association between the Master and Mixer Level Controls.

On leaving the Booster Amplifier, the program enters the MASTER LEVEL CONTROL at about +14 dbm. The Master Level Control, like the Mixer Level Controls, may be adjusted as a result of rehearsal experience to produce a fixed level drop at various points during the program in order to take into account fluctuations in the amount of energy received from the Booster Amplifier (Fig. 25-1A shows an inserted loss of about 14 db.). By regulating the extent of the drop which is actually used above or below the prescribed level, as the input energy of the combined program elements rises or falls while the studio is on the air, it is possible to assure a reasonably uniform output at all times.

The Main Amplifier

The Main Amplifier is designed to produce the full amount of additional amplification needed to meet the requirements of transmission lines following energy drains to a variety of checking, stabilizing and monitoring circuits which are fed from its output. Hence its power handling capacity must be somewhat greater than that of the preceding units in the circuit. *Western Electric* Main Amplifiers are designed to supply gains of from 45 to 70 db, and to provide a maximum output power or .6 watts, the power equivalent of approximately +28 dbm. Necessary safeguards are provided against harmonic and frequency distortion through the use of Stabilized Feedback—a feature commonly employed in

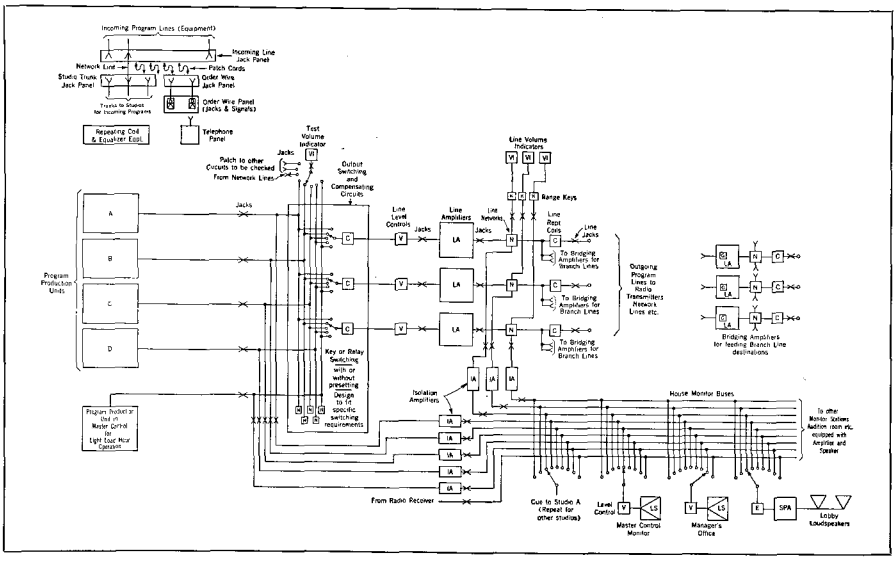

Fig. 25-2. Master dispatch systems showing types of facilities used. Quantities of inputs and other circuits will vary according to individual requirements. (Courtesy Western Electric)

quality amplifiers to prevent the generation of spurious harmonics and to help maintain a flat frequency response throughout a 15,000 cycle range.

At +12½ dbm, as the reference point upon which all of the foregoing level-producing and control operations are based, the program enters the ISOLATING NETWORK through which the transmission is distributed to various wayside destinations, as well as to the outgoing studio line, properly matched and at the desired level. One branch of this network leads to the VOLUME INDICATOR (Chapter 8) which is inserted to provide a visual check on the program level at this highest or reference point. The Volume Indicator translates rapidly varying program energy levels (dbm) into units designated as "vu"—numerically equivalent to dbm. but differing in that the dynamic characteristics of the measuring mechanism are taken into account to provide a practical and uniform system of observation during the transmission.

Monitoring Facilities

A simultaneous aural indication of program quality is provided by means of a MONITOR LOUDSPEAKER located in the Control Engineer's Booth, operated from a line coming from another branch of the Isolating Network, and feeding through a MONITOR LEVEL CONTROL. The Monitor Level Control functions on the same principle as the Master Level Control to provide a uniform and comfortable listening level within the booth. In order to deliver the required volume to the Monitor Loud Speaker, a MONITOR AMPLIFIER is employed possessing an overall gain of from 35 to 63 db, and which should be capable of an output power of from 5 to 20 watts without noticeable distortion. In addition to monitoring the main transmission, this amplifier should have adequate gain and power capacity to permit listening in directly on other incoming program lines, as well as other circuits requiring separate monitoring. For this reason a sufficient loss should be inserted in that branch of the Isolating Network which leads to the Monitor Amplifier and in the leads to other sources to be monitored to permit switching among the inputs of these relatively low level sources without frequent adjustment of the Monitor Level Control.

A CUE AND TALKBACK LOUDSPEAKER located in the associated studio may also be connected to the booth monitoring circuit to allow oral control over the actions of performers, and to facilitate cueing by allowing the performers to hear the close of the program preceding their own. Operation of a loudspeaker in the same room with a live microphone can be prevented by loudspeaker cut-off relays interlocked with "Mike On" Keys for both booth and studio loudspeakers. As a further operating convenience, a keying system can be arranged for remote linecueing to permit switching between the three conditions of monitoring on remote lines, receiving cue from the master control point and feeding cue to the remote lines.

Impedance Stabilization

Still another branch of the Isolating Network consists of an IMPEDANCE STABILIZATION PAD which, in addition to performing other valuable functions, brings down the level in the main transmission circuit to about +8 vu. This, it will be recalled, is the level required for most outgoing transmission lines. The loss in the network branch feeding the Volume Indicator is adjusted so that the meter will read at the normal indication (0 vu or 100% at approximately ¾ full meter scale) when +8 vu is being fed to the outgoing transmission line.

The Impedance Stabilization Pad is another direct outgrowth of *Bell System* research in telephone line transmission. It was discovered during the course of developing the long lines system, that the circuits involved contain not only resistance, but capacitative and inductive reactance to a degree which, if uncontrolled, changes energy distribution with variations in frequency. To correct this condition, engineers devised new circuit elements for the telephone plant which have been adapted for use in high quality audio systems to stabilize the impedances of matching circuits uniformly over the entire 30 to 15,000 cycle range. By inserting such a Pad, in association with a LINE REPEATING COIL, at this point in the system, it is possible to effect the transfer of program energy from the primary, or Production Unit to the Master Dispatching Equipment or, in the case of a simple one studio installation, to the main transmission line

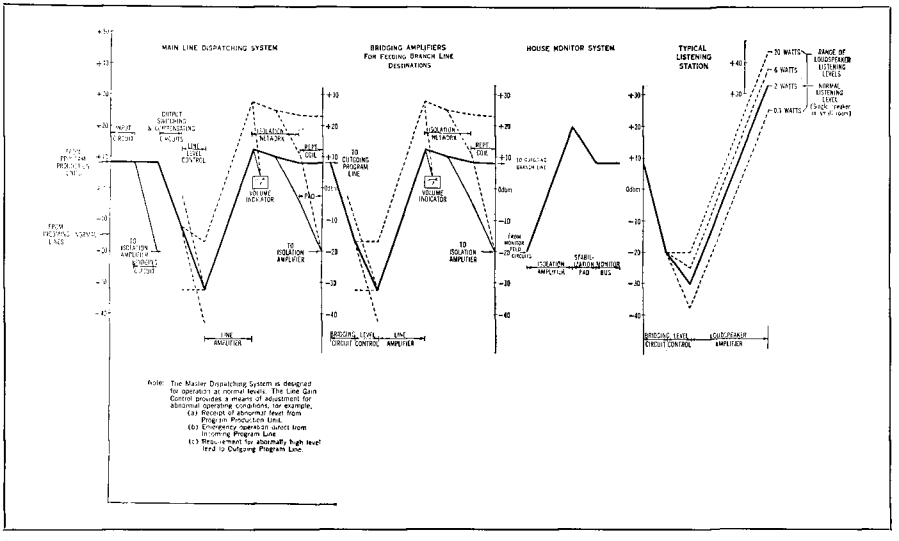

Fig. 25-2A. Typical level diagram of master dispatch systems and studio speech input equipment. (Courtesy Western Electric)

—with a minimum amount of alteration or loss of program quality.

The Master Dispatching Equipment

Constantly under the control of the Studio Engineer, the program passes out of the Production Unit into the Output Switching and Compensating Circuits of the Master Dispatching Equipment—an intricate and complex network which, in our illustration (Fig. 25-2), is capable of receiving the outputs from five studio systems such as the one just described and of feeding programs from any three of these separately or simultaneously over three outgoing lines.

The design of the Output Switching and Compensating Circuits is a matter for individual consideration during which such factors as the following should be taken into account:

(a) Number of Incoming Program Production lines.
(b) Number of Outgoing Program Dispatching lines.
(c) Number of simultaneous transmission paths for different programs.
(d) Frequency with which switching operations will occur.
(e) Rapidity with which switchovers must be made.
(f) Number of simultaneous switchovers at peak operation.
(g) Desirable provisions for light load hour operation.
(h) Physical arrangement of facilities and point at which Switching Control is to be located.
(i) Possible extension of Switching Control to satellite locations.
(j) Facilities for pre-setting for one or more program periods in advance of any given transmission period, so that a number of unit switchovers can be accomplished by the operation of a single switch.
(k) Coordination signals between Program Dispatching and Program origination points.
(l) Coordination with other dispatchers using the same transmission lines.
(m) Facilities for emergency operation—for locating and correcting operating troubles—and routine test equipment to aid in maintenance.
(n) Other considerations peculiar to the individual location.

Since the output switching requirements for small stations, intermediate stations and networks obviously will differ widely in respect to these circuits, a detailed discussion of the subject is not within the scope or purpose of this survey. One fundamental premise, however, should be recognized in this connection. Regardless of the total number of program originating and dispatching lines there may be, it is, of course, desirable to arrange for transmitting program from any production source to any one, or group, or to all of the outgoing lines. It is also usually desirable to feed program from different sources to different lines simultaneously, depending on the number of transmission paths which are built into the system. However, each outgoing line can accept program from only one source at a time without sacrificing proper program control. Hence where program elements are to be originated simultaneously at more than one point, they should be combined in a Program Production Unit before being transmitted to the Program Dispatching System.

Program Sampling

At the entrance to the Master Dispatching System, individual program samples may be drawn off to a House Monitor Bus System through which they can be switched to various other points in studios and offices for observation purposes. In taking a program off a studio transmission line, no discernible loss in line level results, since bridging circuits are used with high impedance differentials. However, an extremely low level is produced in the bridging circuit and, in order to bring the program up to the level required for most monitor bus systems, an ISOLATION AMPLIFIER

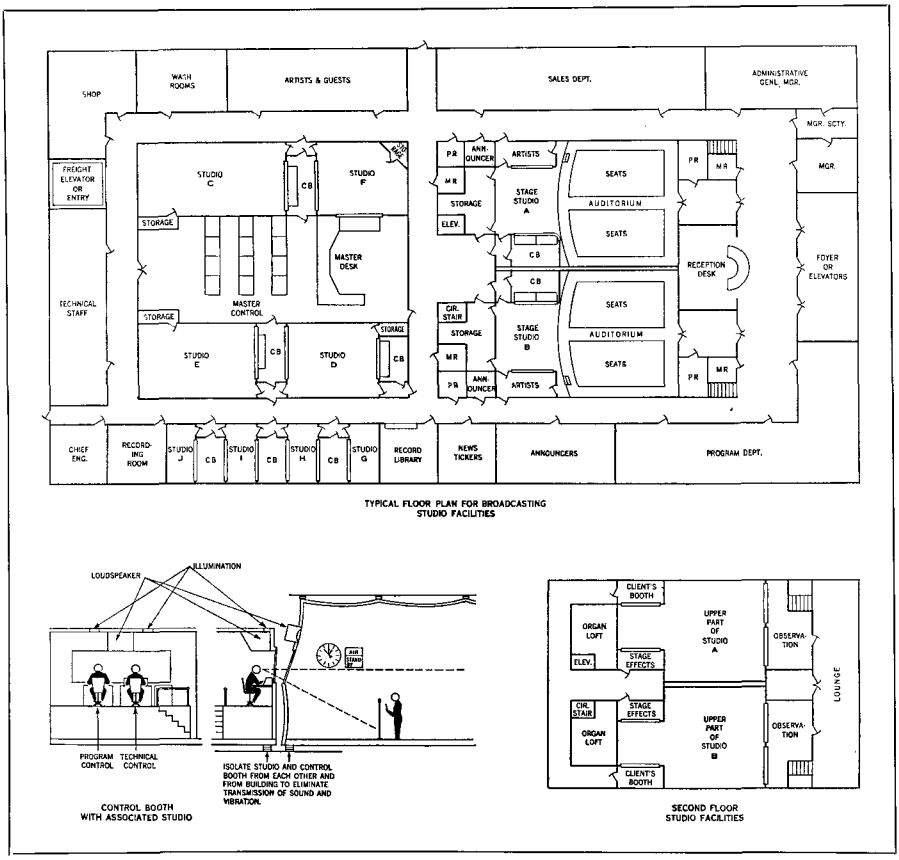

is required. In addition to performing its normal amplifying function, the Isolation Amplifier, as the name implies, serves to isolate the main line from electronic disturbances developing in the House Monitor Switching System. The choice of units for use as Isolation Amplifiers depends on the input power levels which they will be required to accept, and the bus levels which they will be called upon to supply. Frequently units of the Pre-Mixing Amplifier type will suffice. However, for higher level buses serving many listening stations, an amplifier should be employed which can handle considerably higher power loads. Monitor Amplifiers, Monitor Level Controls, and Monitor Loudspeakers are located at each observation point and are connected to the outputs of each branch of the House Monitor Switching System to maintain suitable volume levels for each individual listening point.

Program Distribution

Meanwhile, energy losses have occurred in the three main transmission paths of our typical system due to the terminating, matching and dispatching operations which have taken place in the Output Switching and Compensating Circuits. A corresponding gain of from 40 to 70 db is accordingly supplied in each circuit by means of LINE AMPLIFIERS.

Uniform frequency response and a high degree of stability are of especial importance in a Line Amplifier, since it is called upon to handle programs emanating from many different points in response to rapid switch-overs at the Master Dispatching Desk. Each line

Amplifier is provided with an associated LINE LEVEL CONTROL to facilitate adjusting successive incoming programs or program elements to a uniform volume level. Output power capable of exceeding the +8 vu level requirement of long distance telephone lines is another requisite for this type of unit in order to compensate for further energy loss due to subsequent stabilizing and line equalization operations.

Now ready to leave the studio, the transmission on each line is subjected to a final visual and aural check by means of Volume Indicators and Monitor Loudspeakers—(Note Isolation Amplifiers connected to outputs of Line Amplifiers in Fig. 25-2). The transfer from the Speech Input circuit to the circuit of the transmitting element is then accomplished in much the same manner as from the Studio Production Unit to Master Control.

Impedance Stabilization Pads prepare the transmission for the transfer by stabilizing variable impedance elements and preventing non-uniform distribution of program energy throughout the required audio frequency range. Line Repeating Coils then isolate the circuits against direct current potentials and deliver suitably matched and faithful electrical interpretations of the prepared program material to lines which carry it out to remote transmitter stations or onto wire networks, ready for broadcasting over the air.

System Applications

From the foregoing outline, it will be apparent that, in the case of an audio system installation, "the whole is indeed greater than the sum of its parts." High quality program preparation depends not only on the individual characteristics of microphones, reproducers, amplifiers, etc., but on experienced planning and careful integration of the units that make up such systems so as to meet most effectively and economically the performance requirements of the station or network in which the system is to be used.

Components for Speech Input Systems

The preceding text described a com-

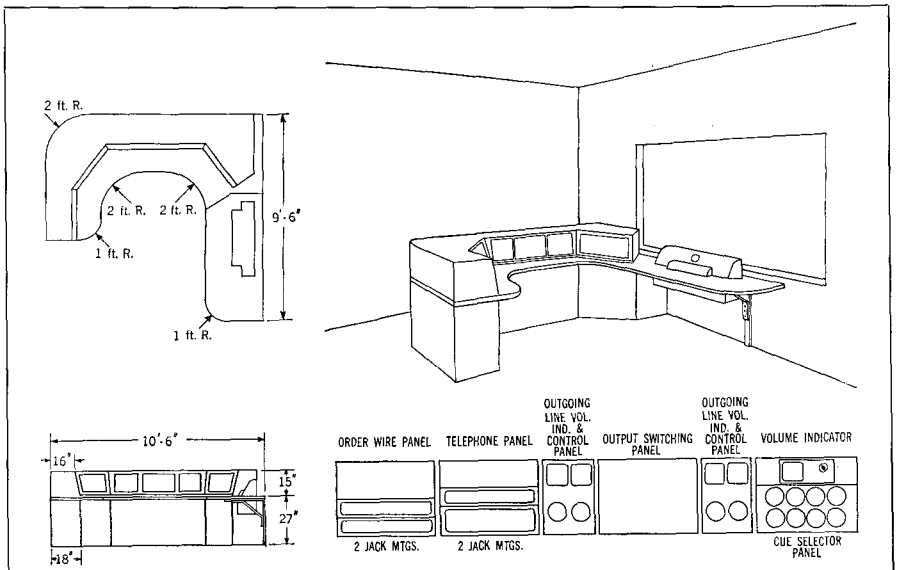

TYPICAL MASTER DISPATCHING DESK AND EQUIPMENT
INCLUDING ASSOCIATED STUDIO AND PROGRAM PRODUCTION UNIT
FOR LIGHT LOAD HOUR OPERATION

plete speech input system using *Western Electric* components.

There are many varied techniques employed by individual stations or networks and different manufacturers have "customized" audio equipment of their own design.

Representative components to be described include the essential units to be found in a modern speech input system.

Some of the components such as Microphones (Chapter 14), Attenuators (Chapter 18), Volume Indicators (Chapter 8), and Preamplifiers (Chapter 20) have been discussed.

The Speech Input Console

For audio control in AM-FM, and television broadcasting, the *Collins* 212A-1 speech input console, Fig. 25-3, provides simplicity of installation, convenience in operation, and versatility.

A noval rotating arrangement allows the entire unit to be tilted, Fig. 25-4, for access to the underside of the chassis without requiring additional space. The 212A can be placed right up against a window, wall or other obstructing surface without sacrificing accessibility, or requiring external support when the chassis is tilted. Unit amplifiers are individually mounted on airplane type shock mounts.

The sloping front panel provides ease of reading and hand movements. Lever type positive action switches are employed in line switching circuits, and reliable telephone type push button controls are used to connect remote lines. The step-by-step attenuators have a smooth, easy action.

Facilities are provided for auditioning or rehearsing, cueing and broadcasting simultaneously from any combination of two studios, an announce booth, a control room microphone, two turntables, and any two of nine remote lines. Two program amplifiers are included in the 212A-1, making possible the feeding of two independent programs at once, or by operating the line reversal switch, providing an emergency amplifier for normal use. A spare key switch is mounted on the panel with leads appearing on the terminal strip.

FEATURES:

1. Ten independent input channels, including 6 microphone inputs and 2 low level transcription inputs (eight preamplifiers, one for each of the foregoing) and 2 channels for remote pickups.

2. Any two of nine remote lines can be selected at will. Normal connections are supplied through the switches, so that override in the monitor is possible if desired. The remote channel provides

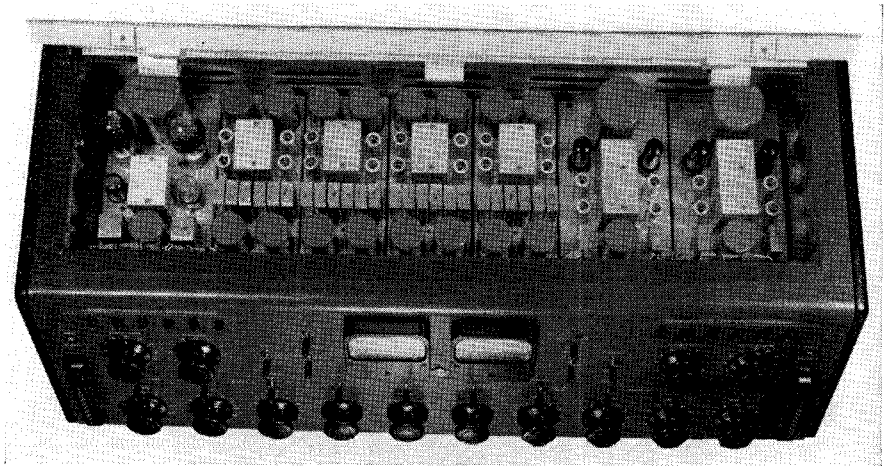

Fig. 25-3. The Collins 212A-1 speech input console for AM, TV and FM broadcast studios. (Courtesy Collins Radio Co.)

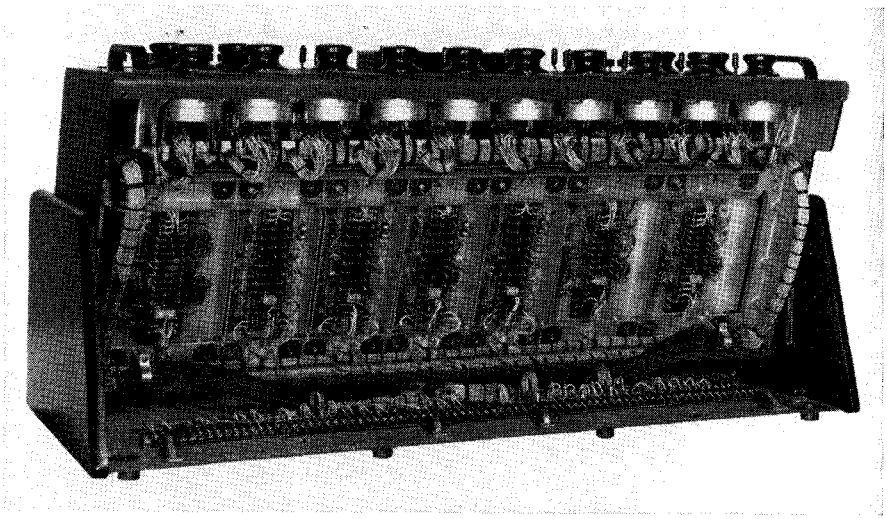

Fig. 25-4. Tilted or servicing position for the Collins speech input console. (Courtesy Collins Radio Co.)

for the feedback of cue to the remote lines, as well as for talkback. (See Fig. 25-5).

3. Loudspeakers in all studios can be fed from the self-contained monitor amplifier, with selective talkback circuits interlocked to prevent program interruption. Talkback from the control room is possible into any one of three studios or into the remote lines by key switch control.

4. Connections are provided for external "on the air" lights, with power furnished by the 212A-1 relay units.

5. Two vu meters are incorporated. One is bridged continuously across the program line 1. The other may be used as a vu meter for the second program amplifier, or to check (by means of a selector switch) individual circuits in the console.

6. Jacks are provided for headphone monitoring of either program amplifier.

7. The construction permits easy access to tubes, components, and wiring, without taking the console out of operation.

8. The power is external, with provision for installation of a duplicate power supply. A single supply is capable of operating the equipment with adequate safety factors for long, trouble-free service. However, if two supplies are installed, a changeover is effected automatically in case of failure of the power supply in use.

Specifications

Frequency response: Microphone to line, or microphone to speaker, within 2 db total variation from 30 to 15,000 cps at normal gain control settings. Not more than ±½ db additional variation in frequency response over the above range at any other gain control setting.

Input impedance: Microphones 30/50 or 200/250 ohms. Remote lines 150 or 600 ohms, with repeat coils self-contained.

Turntables 30/50 or 200/250 ohms.

Output impedance: Program lines 150 or 500/600 ohms balanced. Speakers, maximum of 5, each 600 ohms.

Output level: Program line vu meter adjustable, +4 to +24 dbm* in 1 db steps.

Monitor output: 8 watts.

Distortion: Less than 1.0% rms harmonic distortion at normal output through line amplifier. Less than 2.0% rms harmonic distortion at 8 watts

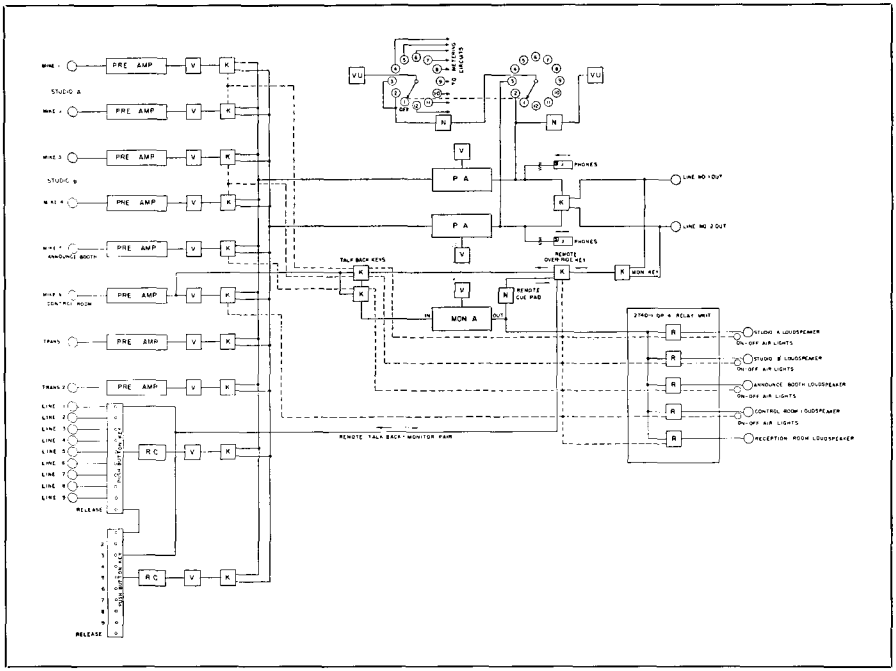

Fig. 25-5. Block diagram of the Collins 212A-1 speech input console. (Courtesy Collins Radio Co.)

output from monitor amplifier. In addition, combination tone distortion shall be of same order at the same levels.

Gain: Maximum, microphone to program line, 100 db; remote line to program line, 50 db.

Noise level: With the gain controls adjusted for normal operation with a low level microphone input and with +16 dbm* output, but with input terminated in an equivalent resistance, the combined hum and noise in the program output is at least 65 db down.

Power input: 115 volts 50/60 cycles ac.

Weight: Approx. 150 pounds.

Dimensions: 42″ w, 12″ h, 17½″ d.

Collins part number: 520 2916 00.

*dbm: reference level 1 mw, 600 ohms.

The Remote Amplifier

The *Collins* 12Z is a light-weight, small-size ac or battery operated remote amplifier.

The input impedance of the 12Z-2 is 30/50 ohms. That of the 12Z-3 is 200/250 ohms. Otherwise the two are identical. Fig. 25-6 shows the 12Z-2.

It contains four input channels with individual controls, a master control, an ac power supply, and a self-contained battery power supply in one easily carried unit. The mixing controls are low

Fig. 25-6. Collins 12Z-2 remote amplifier. (Courtesy Collins Radio Co.)

impedance T type to give low insertion loss. The master gain control is a high impedance potentiometer. All controls have an attenuation of 2 db. per step. A range switch and a meter switch connect a 4 inch illuminated vu meter to the proper circuit for measuring the output level in volume units, or operating voltages.

A 3 db pad between the output of the amplifier and the line provides line isolation. The vu readings are taken at the front of this pad, so that when the vu meter is reading +4, the line level is +1 vu.

The output switch, in 0 position, connects the output of the amplifier into a 600 ohm resistor, and the Tel terminals are across line 2 terminals. In LINE 1 position, the output of the amplifier is across line 1 terminals, and Tel terminals are across line 2. In LINE 2 position the amplifier is across line 2, and the Tel terminals are across line 1.

Jacks are provided for monitor headphones. The program monitor jack is across the output of the amplifier. The line monitor jack is across line 1, or across the Tel terminals when the output switch is in LINE 2 position. See Fig. 25-7.

The program is protected against ac failure by automatic, instantaneous change-over to battery operation. When ac power is restored, the amplifier may be put back on ac operation by turning the power switch to "ac reset," then back to "on." The change back to ac operation is also instantaneous, and the program is not interrupted.

Unit type construction provides easy maintenance. The batteries are held in place with thumb screws. The ac power supply is removed by taking out three bolts and unplugging the unit. The amplifier is shock mounted and is also easily removable.

The 12Z is supplied with a canvas carrying case which, on arrival at the location of a pick-up may be taken off entirely or opened at the front by means of a slide fastener. The front dust cover is removed by means of two ring type fasteners. An interlock switch, operated by this cover, disconnects the batteries when the equipment is not in use. A snap buttoned flap in the canvas carrying case provides access to the four microphone receptacles, power receptacle, and line connections.

Specifications

Input: Four channels, with individual controls and a master control.

Gain: Approximately 90 db.

Noise level: 60 db below program level or better.

Power output: 50 milliwatts (+17 dbm*).

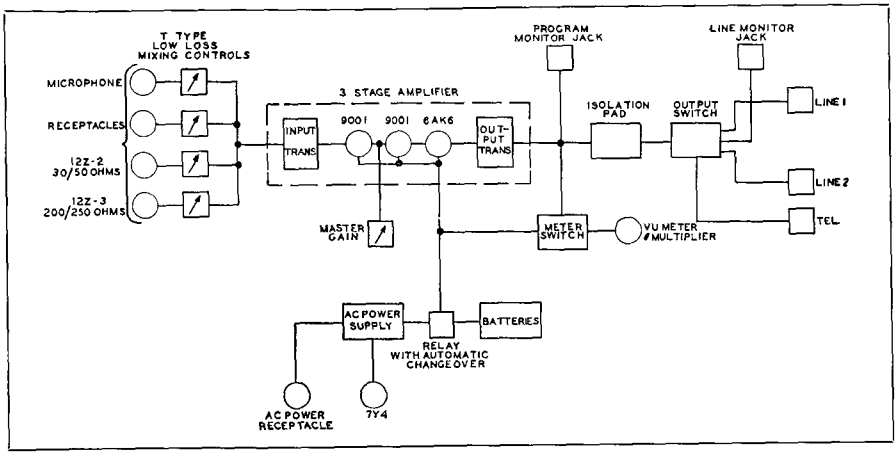

Fig. 25-7. Block diagram of the Collins 12Z remote amplifier.

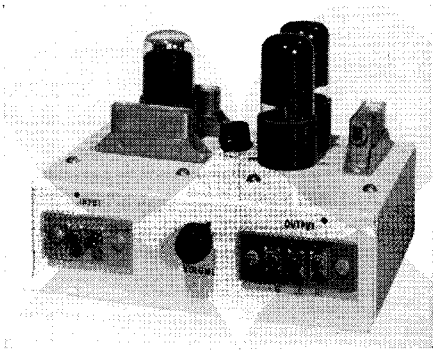

Fig. 25-8. The Fairchild 635-A2 cueing amplifier. (Courtesy Fairchild)

Distortion: Less than 1% at typical operating levels.

Frequency response: ±1 db 50 to 15,000 cps.

Input impedance: 30/50 ohms for 12Z-2; 20/250 ohms for 12Z-3.

Output impedance: 600 ohms (150 ohms available on special order).

Case: Welded aluminum alloy, finished in black wrinkle.

Carrying case: Leather reinforced canvas.

Microphone connections: *Cannon* type P-3-13 supplied. *Hubbell* and other types available.

Power source: 110 volts ac or self-contained batteries. Batteries are low cost standard types, 3 *Burgess* M30 or *Eveready* 482, and 5 *Burgess* 4F or *Eveready* 742. Filament life is 50 hours. B Battery life is over 100 hours.

Weight: With 3 45V B batteries and 5 A batteries approximately 40 lbs. 28 lbs. without batteries.

Size: 14½" w, 11½" h, 8¼" d.

Collins Part No.:
12Z-2 520 2713 00
12Z-3 520 2847 00
Tubes 520 2714 00

*dbm, 1 mw into 600 ohms.

The Cueing Amplifier

The *Fairchild* Unit 635-A2 Cueing Amplifier, Fig. 25-8, is a compact 2 stage push-pull power amplifier designed primarily to operate in conjunction with their Unit 622 Preamplifier-equalizer, and their Unit 635-A4 Power Supply. Its purpose is to supply a local audio signal to a loudspeaker or to a number of headsets in order to monitor or cue a record or transcription. It bridges across any low impedance line without reflecting a mismatch. The schematic is shown in Fig. 25-9.

Specifications

Input Impedance: 10,000 ohms bridging, grounded or ungrounded.

Output Impedance: 1. Low impedance output. The output transformer has a tapped secondary to match a variety

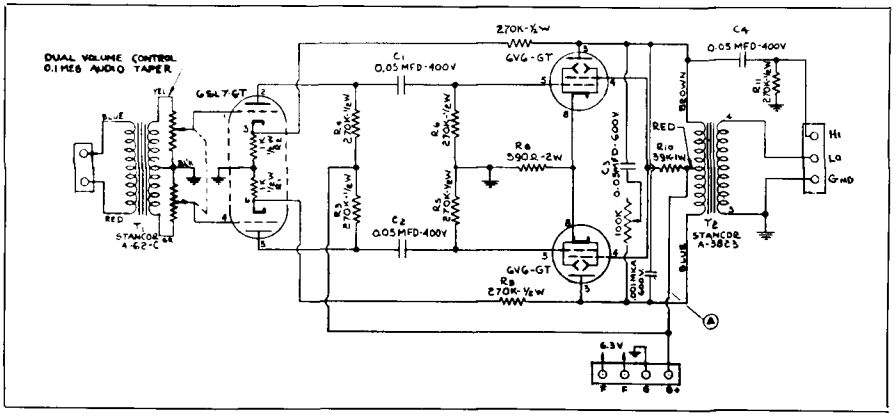

Fig. 25-9. Schematic of cueing amplifier 635-A2.

of voice coil impedances. 2. Hi impedance output to a headset.

Input level: Dual gain control in the first stage permits a wide range of input levels.

Output Power: Three watts to a loudspeaker.

Frequency response: ±1½ db from 70-15,000 cps.

External Power Requirements: Filament: 6.3 v ac at 1.2 amps. Plate: 360 v dc at 54 milliamps.

Tube Complement: One 6SL7-GT, two 6V6-GT's.

Terminations: Binding strips: 1. Audio Input, 2. Audio Output, 3. Power.

Dimensions: 7" x 6" x 4½".

The vu Panel

The *Collins* 62E vu Panel, Fig. 25-10, is designed for accurate monitoring of audio levels in broadcasting, recording studios, and sound systems. A *Weston* type 30 meter is provided, with illuminated face and easily read figures. Overswing is small, and pointer action is deliberate and positive. The 62E-1 meter has a type A scale, with —20 to +3 vu on the upper side and zero to 100% on the lower side. The 62E-2 meter has a type B scale, with per cent calibrations on the upper side. See Chapter 8 for standard characteristics.

Three controls are provided. Any of four circuits can be monitored by means of the circuit selector switch. The attenuator control is calibrated at 1 milliwatt (zero level) and in steps of 2 db. up to a total of 40 db. In addition, a vernier screw adjustment allows ±0.5 db variation for coordinating various meters.

The 62E vu panels are designed to operate from a 600 ohm line. However, other impedances may be used in conjunction with a calibration chart.

Specifications

Input impedance: 7500 ohms constant except on the 1 mw calibration position.

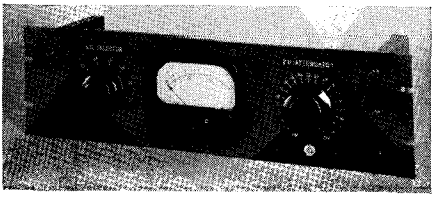

Fig. 25-10. A Collins 62E vu panel. (Courtesy Collins Radio Co.)

Attenuator range: + 4 db to + 40 db in 2 db steps. T-type construction.

Number of input circuits: Four.

Meter scale: Standard vu.
62E-1: Type A Scale
62E-2: Type B Scale

Frequency range: Constant response within 0.2 db up to 10,000 cps.

Power requirement for meter illumination: 6.3 volts ac or dc @ 0.3 amps.

Dimensions: 19" wide for standard rack mounting. 5¼" high.

Finish: Metallic gray.

Weight: 9 pounds.

Collins Part No.: 62E-1—520 2190 00. 62E-2—520 2911 00.

Attenuator Panels

Separate gain control may be maintained over incoming and outgoing lines, auxiliary amplifiers, and speakers, by the use of the *Collins*, 268A-1 and 268B-1 attenuator panels. The 268A-1, Fig. 25-11, consists of two balanced ladder attenuators while the 268B-1 features two bridged-tee type attenuators. Both attenuator types have 20 steps, 2 db attenuation per step, with infinite attenuation in the last step. Connections are conveniently brought out to a terminal strip on the rear. The front panel is engraved to indicate decibels of attenuation.

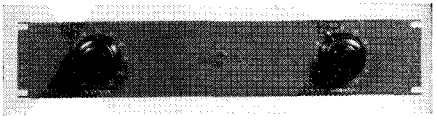

Fig. 25-11. Collins 268A-1 and 268B-1 attenuator panels. (Courtesy Collins Radio Co.)

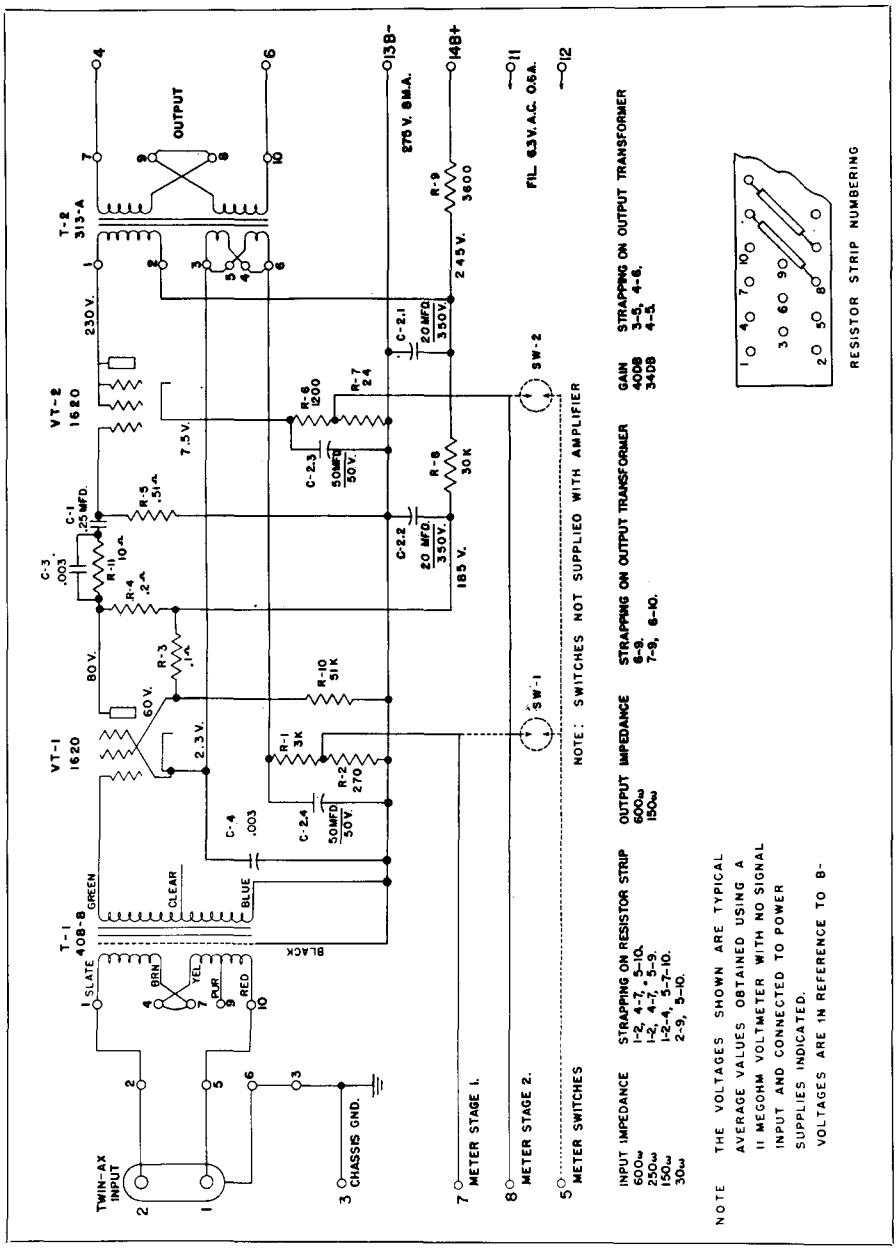

Fig. 25-12. Schematic of the Langevin 116-B booster amplifier.

Specifications

Dimensions: 3½″ h, 19″ w, 4″ d.

Input or output impedance: 600 ohms. Other impedances available.

Finish: Metallic gray.

Weight: 268A-1, 8 pounds, 14 ounces.
268B-1, 8 pounds, 14 ounces.

Collins Part No.: 268A-1 520 3571 00
268B-1 520 3572 00

The Booster Amplifier

The *Langevin* Type 116-B Amplifier, Fig. 25-12, is a plug-in, two stage, medium gain, low noise preamplifier or booster amplifier for use in broadcast audio facilities, recording or sound systems.

Metering circuits are designed to measure the cathode current of the individual tubes expressed as a percentage of a normal tube, using a meter having a 200 microampere movement. A series resistor should be added so that the total resistance of the meter and resistor is 1000 ohms. The meter scale should be calibrated so that nominal cathode current (100%) will read at 75% of full scale.

The amplifier is supplied with the metering connections of the individual tubes brought out to pins on the plug for use with an external meter switch. However, provision has been made for push button meter switches in the handle end of the chassis if it is desired to meter the tubes at the amplifier. The recommended switch for this purpose is the *Grayhill* No. 4001 Push Button Switch.

The 116-B Amplifier, as shipped, is connected to work from a source impedance of 30 ohms and into a load impedance of 600 ohms. If other impedances are desired, the amplifier may be re-strapped in accordance with the table on the circuit diagram, Fig. 25-12. Strapping for the input is accomplished on the resistor strip; for the output on the output transformer.

The amplifier is supplied with a gain of 40 db. The gain may be reduced to 34 db. by restrapping the feedback windings on the output transformer, according to the table on the circuit diagram.

Center taps are available on the input of the 116-B amplifier when the unit is strapped for 150 or 600 ohms, and on the output when strapped for 600 ohms. The input center tap can be grounded on the resistor strip. To ground the output center tap, a wire is run to an additional ground point to the output transformer terminals.

Specifications

Gain: 40 db with provision for adjusting to 34 db.

Input Source Impedance: 30/150/250/600 ohms. Center taps are available when strapped for 150 or 600 ohms.

Output Load Impedance: 150 or 600 ohms. Center tap is available when strapped for 600 ohms.

Output Power: + 18 dbm (.063 watts) with less than .5% rms total harmonic distortion over the range 50 to 15,000 cycles, and less than 1% total distortion over the range 30 to 15,000 cycles.

Output Noise: Unweighted, equivalent to an input signal of —120 to —124 dbm, depending upon input tube, over the band 50 to 15,000 cycles.

Frequency Characteristics: ±1 db over the range 30 to 15,000 cycles.

External Power Requirements: Filament: 6.3 volts ac at 0.6 amperes. Plate: 275 volts dc., 8 milliamperes.

Tube Complement: Two 1620's.

Size: Length, 10 in.; Width, 2 in.; Height, 5 in.

Weight: 4 lbs.

Shipping Weight: 5½ lbs.

Finish: Light grey baked enamel over 16 gauge, bonderized steel.

Plug: Supplied with mating plug receptacle.

The Program Amplifier

The *Collins* 6M, Fig. 25-13, program amplifier will perform in AM, FM and TV applications in present day broad-

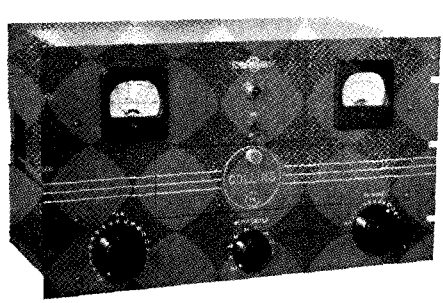

Fig. 25-13. Collins 6M program amplifier. (Courtesy Collins Radio Co.)

casting. The Program Amplifier takes the output of a preamplifier, raises it to a higher power level, and feeds it into such diverse channels as program, line, transmitter input, recording amplifiers, monitoring amplifiers, and P.A. systems. The self-contained power supply will furnish power for as many as five preamplifiers. The left-hand meter measures the dc plate current of the 3 audio stages as well as the plate supply voltage of the unit. Five additional positions permit measuring external currents, such as in preamplifiers, when used with correct shunt values. The righthand instrument is a vu meter for measuring the 6M output. A vu switch allows measurements of output from 0 vu to +24 vu.* All tubes are accessible through a door in the front panel, and the dust cover slips off quickly to give access to all circuit components.

Specifications

Input impedance: 50/250/600 ohms.

Output impedance: 600 ohms (150 ohms available).

Number of channels: One.

Input level: —40 to —10 dbm*.

Output level: —10 to +24 dbm*.

Overall gain: 70 db. maximum.

Frequency response: 30-15,000 cps ±1.0 db.

Noise level: 65 db. below program level.

Distortion: Less than 1% at program level.

Power source: 115 volts ac, 50/60 cps.

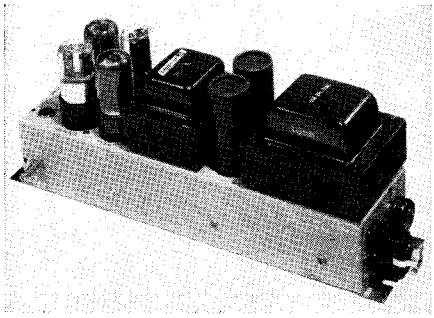

Fig. 25-14. Langevin type 130A monitor amplifier. (Courtesy Langevin)

Power available for external use:
6.3 volts ac CT @ 2.7 amps
Approx. 250 volts dc @ 50 milliamperes.

Tube complement: 6SL7, 6SN7, 2—1621, 5U4G.

Mounting: Standard 19″ rack.

Mounting dimensions: 10½″ h, 19″ w, 9½″ d.

Meters: One voltmeter and one vu meter.

Finish: Metallic gray.

Weight: 39½ pounds.

Collins Part No.: 520 2717 00.
Tubes: 520 2718 00.

---

*dbm—reference level 1 mw, 600 ohms.

The Monitor Amplifier

The *Langevin* type 130A monitor amplifier, Fig. 25-14, has been designed as a small medium power amplifier for monitor use in Broadcast, FM, TV and Wired Music services. Performance characteristics and quality construction make it a dependable unit.

The 130A is completely self-contained, including power supply, Fig. 25-15, and all cannections to the unit are of the plug-in type. Input and output connections are made through a *Jones* plug: the power connection uses a miniature connector. Provision is made for the volume control to be mounted on the top, side or end of the chassis depending on the mechanical requirements of the individual installation.

The small size of the 130A amplifier permits mounting in consoles and cabinets or directly in the monitor speaker housing. Where several of the 130A amplifiers are required, as in a rack installation, as many as four may be mounted on a standard *Langevin* 10B Mounting Frame.

Specifications

Power output: 8 watts (plus 39 vu).

Distortion: Less than 3% at rated output from 50 to 15,000 cps.

Frequency response: Plus or minus 1.0 db. 30 to 15,000 cps.

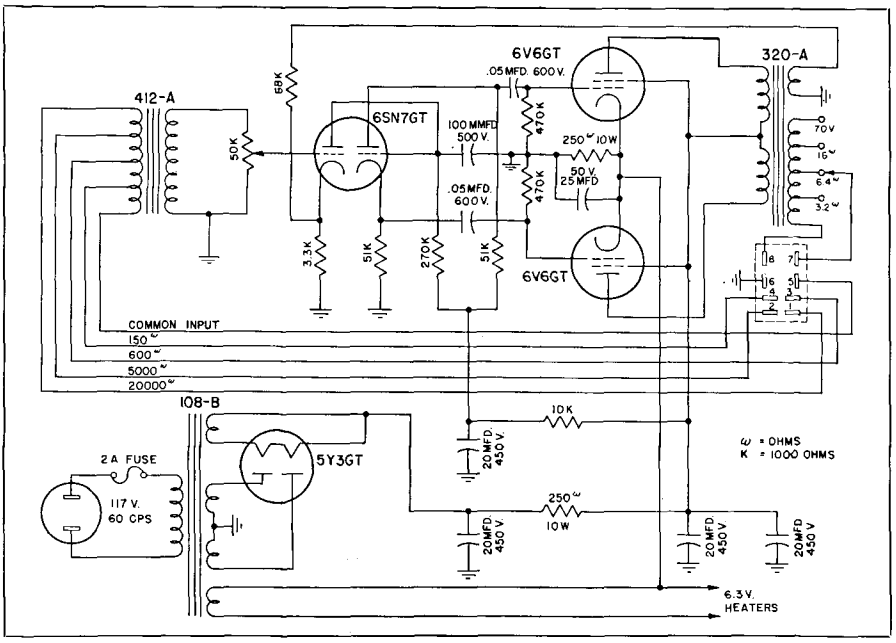

Fig. 25-15. Schematic of Langevin type 130A monitor amplifier.

Gain: 40.0 db with input matching line. 25.0 db with 20,000 ohms input across 600 ohm line or 5,000 ohm input across 150 ohm line.

Noise Level: Less than —30 dbm (unweighted) at output terminals.

Input Impedance: 150/600/5000/20,000 ohms.

Output impedance: 3.2/6.4/16 ohms/70 volt line.

Power requirements: 60 VA on 117v —60 cps line.

Tubes: 1-6SN7GT, 2-6V6 GT, 1 5Y3GT.

Size overall: 3⅛" x 13" x 5" high.

Weight: 9½ lbs. (approx.).

The Limiting Amplifier

The *Presto* 41-A amplifier, Fig. 25-16, is a program or line amplifier with peak limiting. The need for high average levels in disc recording to overcome the surface noise inherent in most pressing materials demands the use of some device to prevent high amplitude peaks from causing overcutting of grooves or

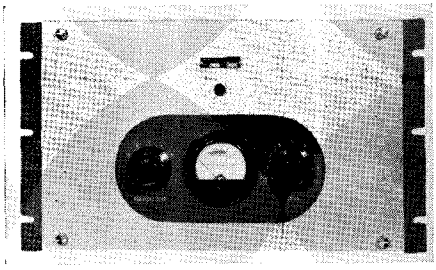

Fig. 25-16. Presto 41-A program or line amplifier with peak limiting. (Courtesy Presto)

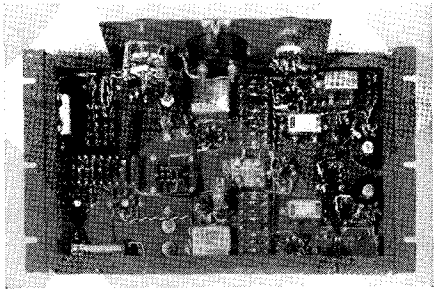

Fig. 25-17. Bottom view of the Presto 41-A peak limiting amplifier. (Courtesy Presto)

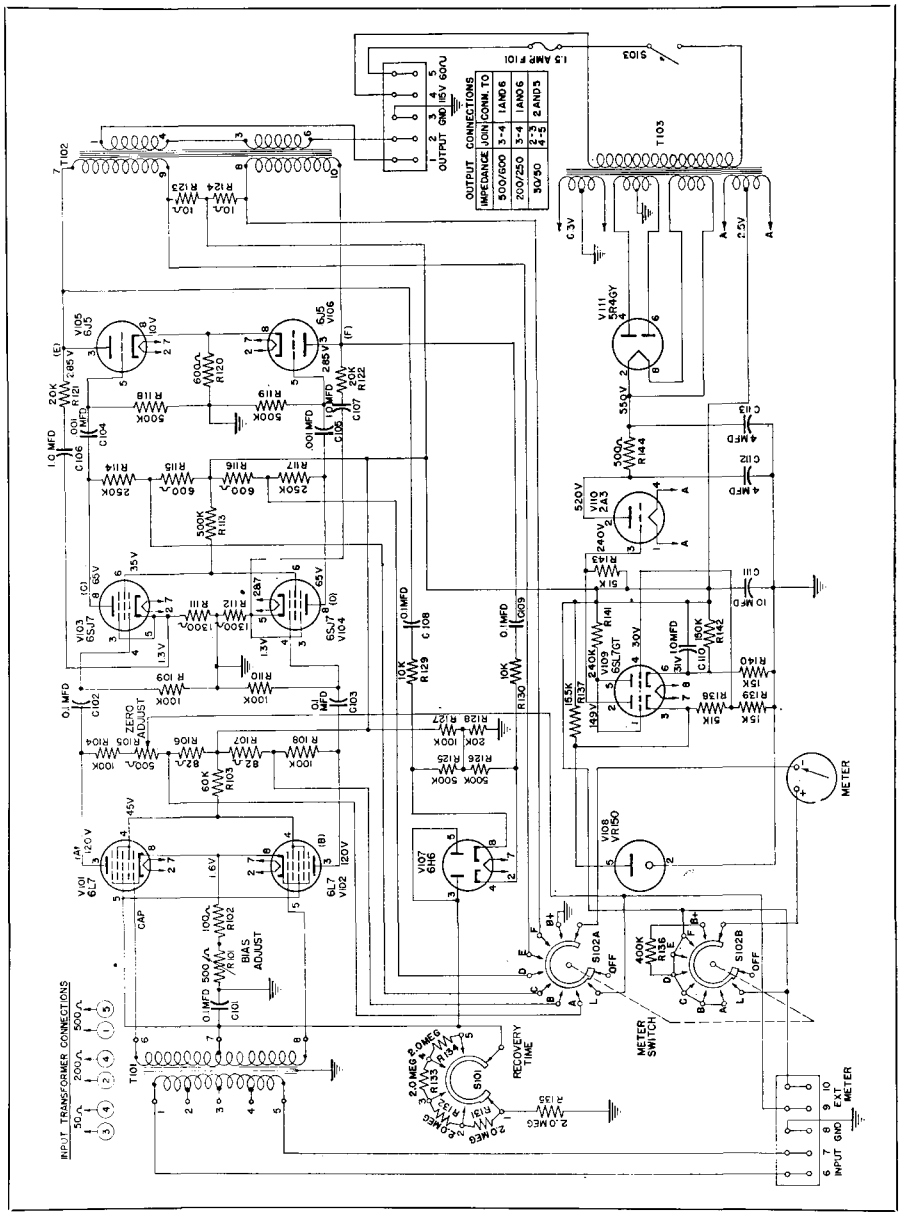

Fig. 25-18. Schematic of the Presto 41-A program or line amplifier with peak limiting.

distortion. The 41-A was designed for this service. It provides a peak limiter with fast attack time, low thump level and high quality transmission.

The amplifier with its self-contained regulated power supply is built on a heavy gauge chassis, arranged for vertical mounting. A removable front cover gives access to all components for service or adjustment. See Fig. 15-17.

The 41-A amplifier contains three resistance coupled push-pull stages of am-

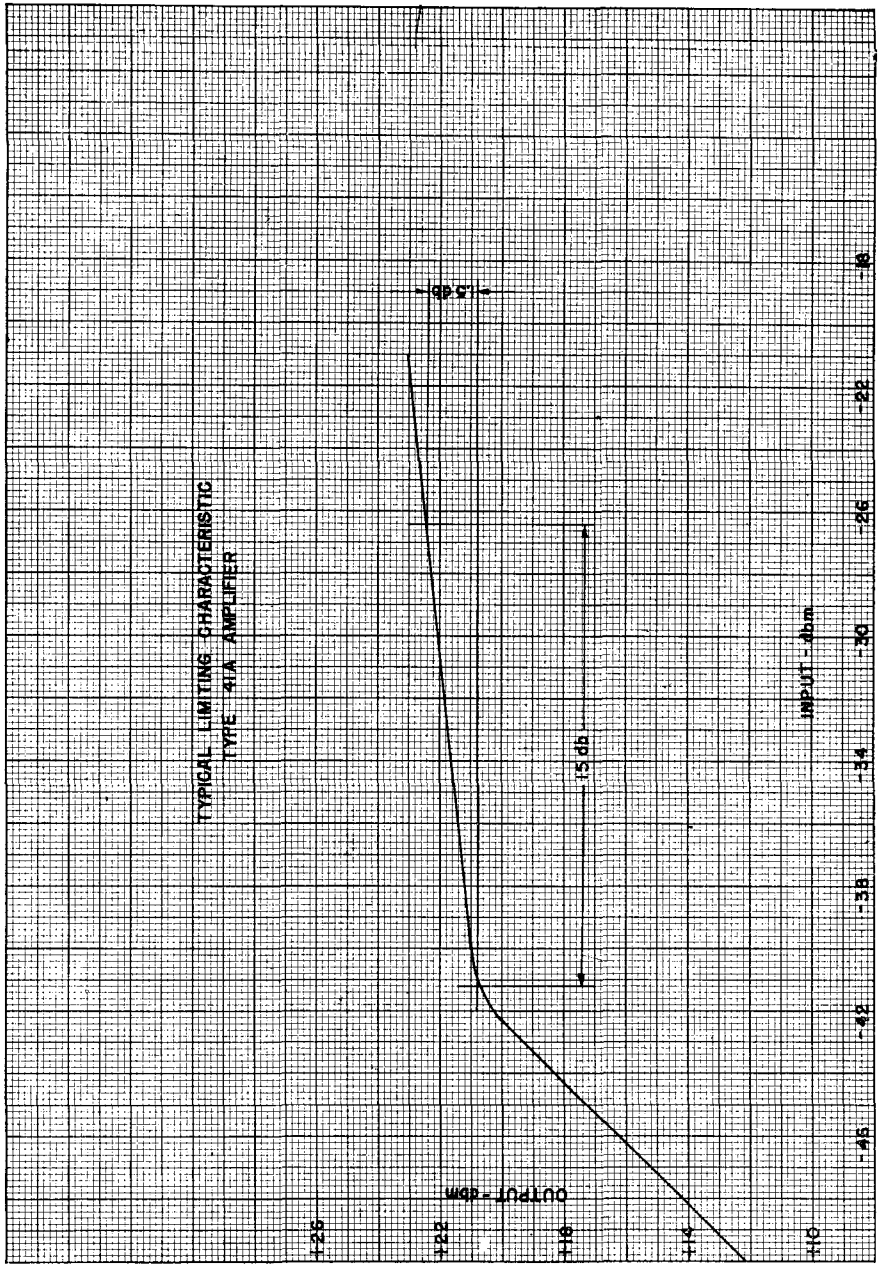

Fig. 25-19. Frequency response of the Presto 41-A peak limiting amplifier.

plification. The first stage tubes are pentagrid types. The peak limiting is accomplished by controlling the gain of these tubes by means of a negative bias applied to two of the control grids. The second stage tubes are pentodes and the output stage are low impedance triodes.

A stabilized feedback loop (see Fig. 25-18) is formed around each side of the second and third stages providing a low distortion output and a very low effective output impedance.

A full wave diode rectifier is connected across the output plates through isolating resistors. A delay bias is applied to the diode cathodes to prevent conduction until an output level of +20 dbm is reached. At the instant the peak output voltage exceeds the delay bias the diodes conduct, charging the 0.1 mfd capacitor which is in parallel with the diode load. The negative voltage across the capacitor is applied to the No. 1 and No. 3 grids of the pentagrid first stage tubes. This negative bias reduces the gain of the first stage to the point where the output level is less than the delay bias on the diodes and the diodes cease conducting. The charge on the capacitor leaks off through the diode load resistor exponentially with time bringing the gain back to normal. The rate at which the charge leaks off and the time required to restore the amplifier to normal gain are dependent upon the value of the diode load resistor. The load resistor is made adjustable from two to ten megohms by means of a five position selector switch, marked "Recovery Time." This gives a recovery time between 0.2 sec. and 1.0 sec. in 0.2 second steps. Attack time is less than one millisecond.

A voltage regulated supply keeps the dc output voltage constant with line variations from 100 to 130 volts. The supply consists of a conventional full wave rectifier and filter feeding a low impedance triode connected in series with the supply. The plate impedance and voltage drop in the triode are varied by controlling its grid bias. The bias is obtained from a two stage dc amplifier. The dc amplifier maintains a constant difference between the output voltage of the supply and a standard reference voltage obtained from a cold cathode glow tube. Any small change in the output voltage is amplified changing the bias of the series triode and its voltage drop, bringing the output voltage back to its original value. The limiting characteristics may be seen on Fig. 25-19.

A meter is provided which is used to measure the tube currents, supply voltage and indicate the amount of limiting taking place. An eight position selector switch connects the meter to the various circuits.

Specifications

Frequency Response: Uniform within 1½ db from 30 to 15,000 cps.

Gain: 60 db.

Noise: Less than —47 dbm.

Power Output: +20 dbm. (Output level at which limiting starts).

Distortion: Not more than 1% rms for any frequency between 50 and 10,000 cycles at any output level up to limiting point. With 15 db. limiting distortion does not exceed 2% and is dependent on the match of the gain controlled tubes.

Input Impedance: Input transformer operates from 50/200/500 ohm source. Connected at factory for 500 ohms.

Output Impedance: Operates into 50/200/500 ohm impedances. Connected normally for 500 ohm load.

Power Requirements: Draws 70 watts from 115 volt 50/60 cycle line. The regulated supply operates satisfactorily from line voltage between 105 and 130 volts.

Tubes: 2-6L7's, 2-6SJ7's, 2-6J5's, 1-6SL7GT, 1-2A3, 1-SR4GY, 1-OD3/VR150.

CHAPTER 26

Complete Recording Systems

A discussion of semi-professional, studio and portable systems containing all essential features required for high-quality disc and magnetic recording.

● There are many audio engineers, students, home-recordists, and dyed-in-the-wool enthusiasts who show a keen interest in "customized" audio installations using studio techniques. Generally they are also interested in setting up complete record-playback systems for the purpose of making audio measurements, for comparative testing, and for the high quality reproduction of music.[1]

The above category includes both those who prefer to build their amplifiers, tuners, and mechanisms and those who choose their equipment from the manufacturer's ads and catalogues.

In our own particular case a physical setup (Fig. 26-8) was required in order to serve as a "proving ground" for studying the behavior of many components in a record-reproduce system and which has proven most useful and time saving.

Semi-Professional Recording System

To meet our own requirement for recording and reproduction on disc and tape, we incorporated the following equipment:

1. A preamplifier with five selective inputs, self-contained phono equalizers and bass-treble boost or cut.
2. A Line amplifier.
3. Two jack panels (1 single, 1 double).
4. A 50 watt recording and playback amplifier.
5. A 10 watt monitor amplifier.
6. A spare record-reproduce amplifier, with built-in dynamic noise suppressor.
7. An FM-AM tuner with built-in audio preamp and equalizers.
8. A 16" television tuner.
9. Two speakers on two separate 600 ohm lines.
10. A two-speed tape recorder with monitor.
11. Dual 16" turntables for recording and playback.
12. Volume and power level meter panel.
13. A dc supply for meter illumination and certain filaments.
14. Provision for several phonograph pickups of various types.
15. A 3 watt amplifier for the television tuner.

Note the absence of a conventional mixer panel. This was deemed unnecessary since the preamplifier on hand had adequate provision for the limited amount of mixing that would be required in this particular system.

The Preamp-Equalizer

Requirement No. 1 was satisfied by employing a *McIntosh* Model AE-2 pre-

[1]Read, Oliver, "A Flexible Record-Reproduce System," RADIO & TELEVISION NEWS, Vol. 44, Nov. 1950, Vol. 45, Jan., Feb., 1951.

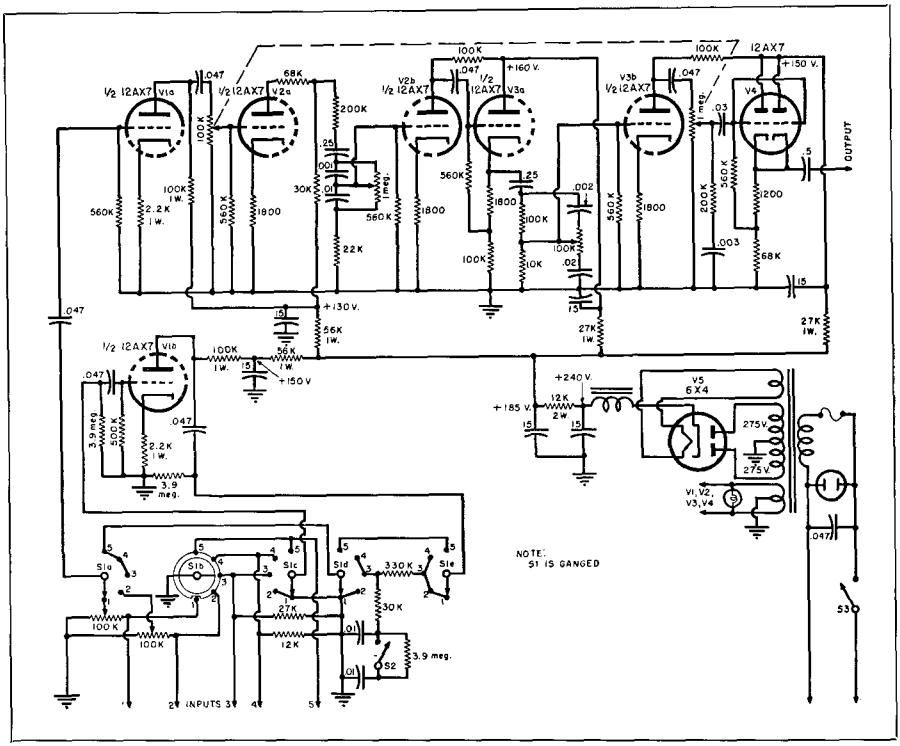

Fig. 26-1. Schematic of the AE-2 preamp-equalizer showing program switching arrangement.

amplifier-equalizer control unit. This was originally designed to provide an adequate amount of amplification between five different program sources and a recording or reproducing amplifier. Various program circuits are selected, Fig. 26-1, by means of a front panel control. Five input channels are provided. Circuits 1 and 2 receive 40 decibels of amplification, constant from 1000 cycles to 20,000 cycles.

Circuits 3 and 4 receive 40 decibels of amplification, constant from 1000 cycles to 20,000 cycles (but increases below 600 or 300 cycles to compensate for the 6 decibel-per-octave recording characteristic). A choice of either turnover frequency (600 or 300 cycles) is selected by a switch on the panel. Fig. 26-3.

Circuit 5 receives 70 decibels of amplification which is constant with respect to frequency. All five circuits are subject to variable amounts of bass and treble boost or bass or treble attenuation. The two controls are non-interacting and provide a boost up to a maximum of 17 db and attenuation to a maximum of 17 db.

The first two channels are intended to be used between such program sources as crystal microphones or pickups and FM-AM tuners. In order to prevent overloading at the inputs of these two channels, separate potentiometers are provided which may be used to preset the program level in those two circuits.

Circuit 3 presents a 27,000 ohm load and is designed to provide flat frequency response from the high impedance *Pickering* cartridge. Circuit 4 likewise presents a 12,000 ohm load which provides substantially flat response from the *G-E* variable reluctance cartridge. Where circuits 3 and 4 are used with magnetic cartridges of other manufacture, such as the new *Audax*, the terminating resistance may be removed and the opti-

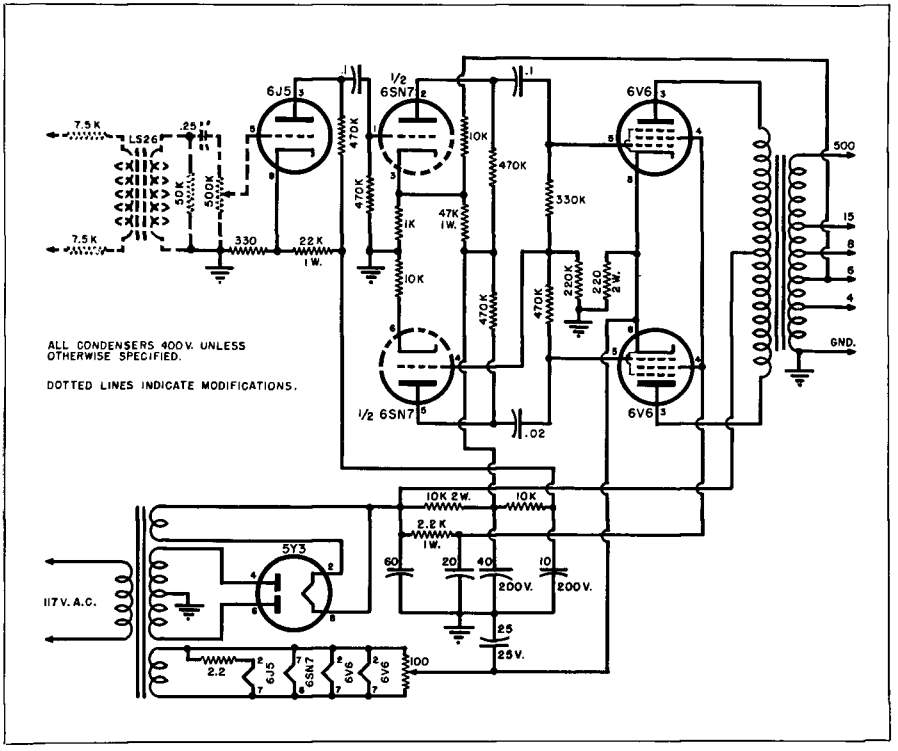

Fig. 26-2. Schematic diagram of the monitor amplifier using conventional circuits.

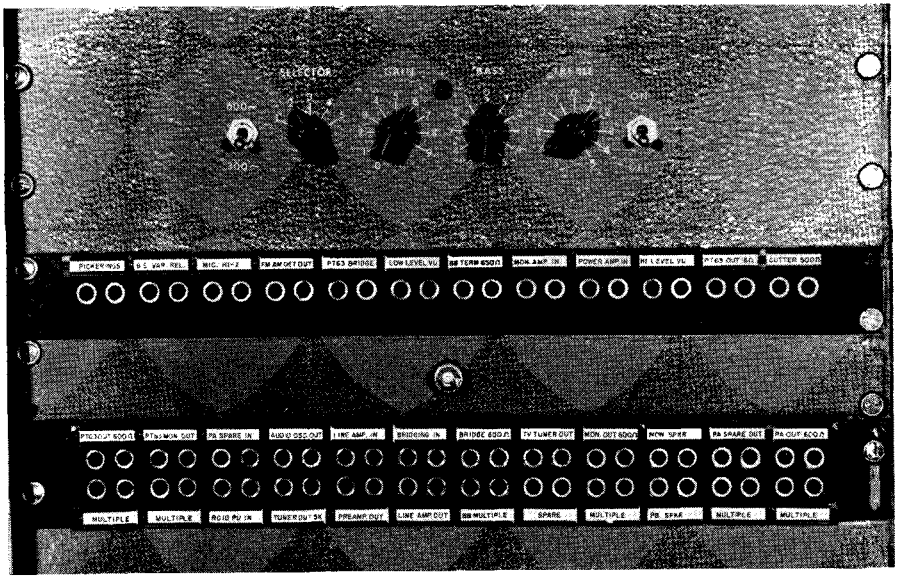

Fig. 26-3. All program circuits terminate in this jack field mounted below the AE-2 preamp-equalizer. (Courtesy RADIO & TELEVISION NEWS)

mum value substituted, as recommended by the manufacturer.

Circuit 5 provides 70 decibels of amplification and loads the program source with ½ megohm resistance shunted by approximately 16 $\mu\mu$fd of capacity. This circuit provides adequate amplification for nearly all high impedance magnetic type microphones.

The two equalizer controls are used to modify the frequency response of the preamp on each of the five program circuits. In the case of circuits 3 and 4, the 6 decibels-per-octave change in amplification below 300 or 600 cycles, may be either increased to 12 decibels-per-octave or reduced to almost a constant amplification with respect to frequency.

Normally the parallel-connected 12AX7 tube is used in a cathode follower circuit and feeds directly to the power amplifier. An output transformer is added to match the output impedance of the equalizer (15,000 ohms) to a line impedance of 600 ohms.

Line Amplifier and Bridging Bus

The purpose of a line amplifier is to take a relatively low level signal and bring it up to a suitable level for transmission through a line. The output level of the line amplifier must be sufficiently high so that it may override any noise which is induced in the transmission line. Normally, a suitable figure for this output is plus 4 dbm.

The line amplifier employed in this system raises the input level of approximately minus 30 dbm to an output level of plus 4 dbm. The over-all gain therefore must be at least 34 db. The output or secondary side of the line amplifier terminates in a low impedance bridging bus. Fig. 26-8.

The bridging bus is a transmission line terminated by a suitable resistor. The function of the bridging bus is to act as a distribution point from which the audio signal may be fed to several other circuits, including bridging amplifiers, metering circuits, monitor amplifiers, recording amplifiers, and long lines. The bridging bus is a low impedance circuit of 600 ohms. The line amplifier therefore works between two low impedance lines of 600 ohms.

The Jack Field

The jack field is really the heart of the system and all input and output circuits terminate in one or the other of the jack strips, Fig. 26-3. Provisions are made for direct connection of the phono pickups, microphones, detector circuits, bridging circuits, monitoring circuits, and speaker circuits. It is extremely important when laying out a jack field that all circuits having a difference in level of approximately 20 db be widely separated in order to prevent crosstalk. This is accomplished by positioning all low level sources away from output power circuits from the amplifiers. The design of the jack field probably receives the greatest amount of attention in a system such as this. All wiring and cabling must be done with extreme care in order to avoid ground loops.

The Main (Recording) Amplifier

It is imperative that a high quality amplifier be used having an undistorted output of from 20-50 watts. This requirement was met with the *McIntosh* 50W2 amplifier.

Since an audio amplifier is an electronic device, passing a wide band of frequencies, it is necessary that the amplifier does not change the characteristics of the signals that are transmitted to it, otherwise the deletion of frequencies and/or high order of intermodulation distortion will result which can be most irritating to the listener. It is not sufficient to talk of gain frequency characteristics alone simply because every good amplifier, with an audio range from 20 to 20,000 cycles, has a variation of less than one db. It is obvious to the experienced engineer that this is a very difficult variation to measure. An amplifier will pass no more peak power per instant than it will power on a continuous basis, usually with the same amount of distortion. Therefore the amplifier must be designed for the maximum peak

and maximum frequency range it is desirable to pass.

Sacia, back in 1925, showed that the average acoustical power in speech is quite low and that the momentary or instantaneous peaks of speech were found to be 200 times this average power. In music it is found that this ratio may go up from 200 to 400. Therefore we know that a recording amplifier must be able to pass peaks averaging from two hundred to four hundred times the average power in speech or music.

As an example, suppose ¼ watt average electrical power is fed into a loudspeaker (which is about right for monitoring a program). It is evident that from 50 to 100 watts would be required to satisfy the peak powers of the original sound. It may seem somewhat astonishing to realize the sort of powers that are needed for adequate recording of speech and music. While these peaks are often of very short duration and do not necessarily fatigue the listener (when reproduced) they do chop off at the top. The result is a loss of the dramatic nature and thrill of listening to reproduced sound.

With amplifier efficiencies that are now available (60 to 65%) it is possible to achieve some of the dynamic power peaks on a practical scale and at a practical cost. It is recommended, therefore, that the basic amplifier used for recording have a power of approximately 50 watts. This provides a reasonably safe margin and provides for the realistic recording and reproduction of speech and music.

The 50W2 amplifier is provided with a 600 ohm line input transformer. In order to provide sufficient gain a separate plug-in booster amplifier, especially designed for the unit, was employed. The 600 ohm output of the amplifier normally connects through the jack field, described later, to the playback speaker.

The Monitor Amplifier

The fifth requirement was met by employing a *Radio Craftsmen* RC2 amplifier. Fig. 26-4. An input bridging transformer was added to match the impedance to the bridging bus. The 600 ohm output connects to the jack field and is "normalled" to the monitor speaker. The amplifier provides approximately 10 watts output at low distortion.

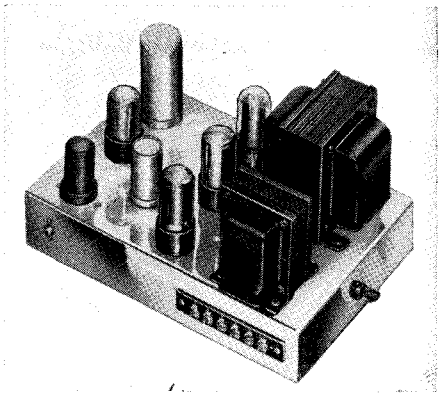

Fig. 26-4. The Radio Craftsmen RC2 amplifier modified for use in this system. (Courtesy Radio Craftsmen)

The Spare Amplifier

It is always good practice when designing a recording system to provide a spare record-reproduce-monitor amplifier, should it be needed. This unit is based on the design of *Goodell* (Chapter 19) and employs the *Scott* Dynamic Noise Suppressor. The input and output circuits of this amplifier terminate in the jack field and the amplifier may be substituted (by means of patching) for any other amplifier in the circuit with perfect impedance match.

The FM-AM Tuner

This unit is the *Radio Craftsmen* RC10 tuner (Chapter 24) with built-in audio preamplifier. It is desirable, when laying out a system, to provide emergency preamplification for the several inputs. This tuner connects to the jack field and the detector output of the tuner feeds "normally" to the input of the AE2 preamp equalizer. When needed, any of the phono pickups or other input sources may be patched in to the RC10 tuner. Here equalization is also provided for

phono pickups as well as provision for complete bass and treble tone control.

The Television Tuner

Inasmuch as the equipment was to be used not only as a record-reproduce system, but as a television entertainment position, we decided to incorporate a television tuner within the assembly. The tuner is the *Radio Craftsmen* RC 100A. It is fed by a regular outdoor television antenna and this also serves to provide signals for the FM-AM tuner. A 1000 ohm resistor connects between the antenna terminal of the tuner to one side of the television antenna. This provides the required isolation.

The output of the TV tuner also terminates in the jack panel and is normalled to a 2-stage audio amplifier and separate speaker. In this way it is not necessary to operate the entire audio group in order to provide audio amplification for the television tuner when used alone. If a recording is to be made from a TV program source, it is a simple matter to patch in the output of the tuner into one of the preamplifiers.

The Speaker Lines

Two separate speaker lines are used, one going to a special monitor speaker, the other to the playback speaker. Both are of 600 ohms. Two 8″ speakers (connected in parallel) are used for monitoring. The playback speaker is the *RCA* 515S2.

The Recording Turntables

The turntables are *Presto* 6N units. Normally one of the tables is used for disc recording. The recording mechanism has been removed from one table in order to provide space for the mounting of additional phono reproducers for experimental purposes. Shown in Fig. 26-5 are two *Pickering* 130M pickups and a *G-E* variable reluctance unit. Another pickup used in this system is the *Audax* Polyphase transcription reproducer.

Fig. 26-5. Birds-eye view of the turntable console, showing two Presto 6N tables. (Courtesy RADIO & TELEVISION NEWS)

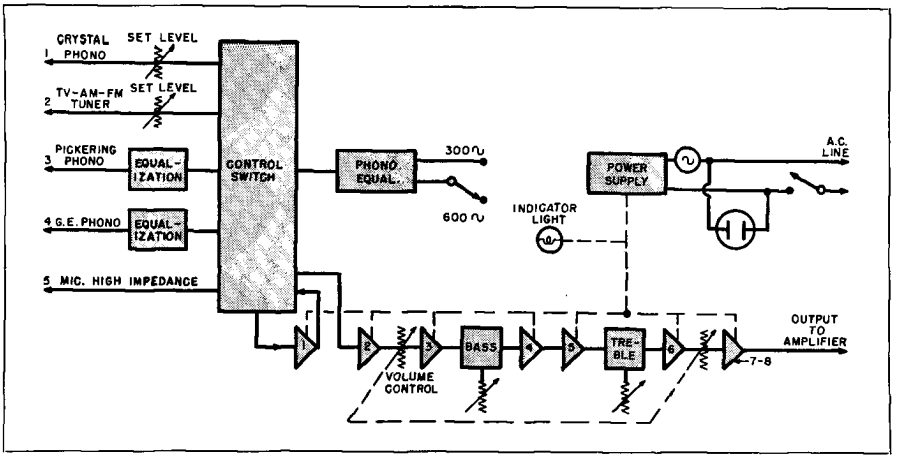

Fig. 26-6. Block diagram of the AE-2 combined preamp-equalizer.

Magnetic Tape Recorder

The recorder illustrated is the *Magnecord* PT6JA. Since taking the photos these have been replaced with the new PT63JA. The 600 ohm output of the *Magnecord* amplifier terminates in the jack panel, as does the signal from the monitoring head.

Meter Panel

It is necessary to provide accurate means for measurement of line and power levels. Two *Simpson* Model 49 standard vu meters, one with necessary attenuator to extend the range of the instrument, are used for line and power level measurements. One meter is normally connected to the bridging bus, and audio level is maintained through the line at +4 dbm. (See Chapter 8).

Circuit Details

The first requirement was a combined preamplifier and equalizer (see Fig. 26-1) in order that a choice of program circuits could be made by means of a selector switch and this program material amplified and equalized before being passed to the line amplifier. Fig. 26-6 shows the block diagram of the combined preamp-equalizer. Note that the volume control is a tandem-connected unit which affords smooth control of gain over two stages rather than the conventional single stage control.

The circuit arrangement (Fig. 26-1) provides complete freedom from impulse types of distortion and a stable feedback circuit permits full adjustment of either the treble or bass controls without amplifier instability.

Bass boost of approximately 20 db and bass attenuation of approximately 13 db is available and is independent of the treble control. Likewise the treble boost of approximately 15 db and a treble cut of approximately 20 db is independent of the bass control.

A switch is provided which makes possible the selection of either 300 or 600 cycle turnovers at a 6 db per octave rate for channels 3 and 4. In addition, separate adjustable gain controls are provided for the tuner and crystal pickup inputs so that the program level may be preset for these two channels.

Typical curves for the preamplifier are shown on the graph of Fig. 26-7. These provide more than adequate equalization for nearly every listening condition, and are also highly useful in the recording of sound on disc where treble frequencies must be accentuated during the recording process at slow speeds and at inner diameters.

The output of the preamplifier connects to a plate-to-line transformer. The

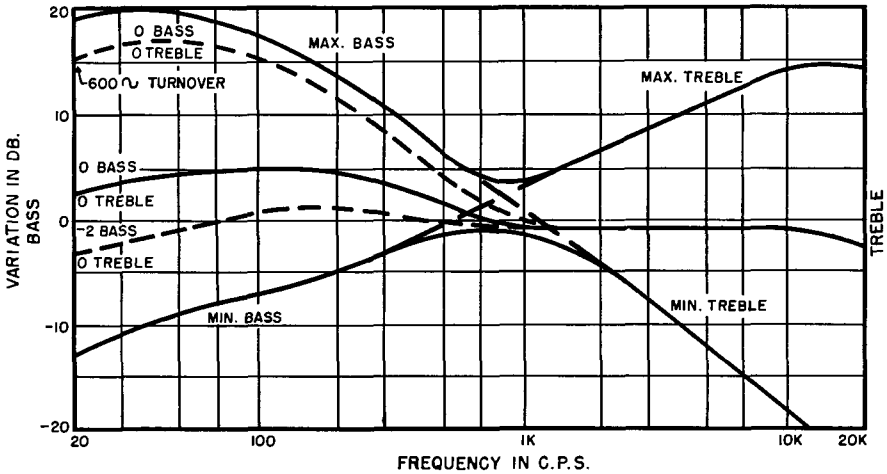

Fig. 26-7. Typical curves of the AE-2 preamp-equalizer.

output is 600 ohms (unbalanced). The 600 ohm line from the preamplifier output matching transformer connects to the jack field. This line feeds through two pairs of double jacks and is "normalled" to the input of the line amplifier, as shown in Fig. 26-8.

The Line Amplifier

The circuit for this amplifier is entirely conventional and is used in several commercial units. It meets the requirement of approximately 40 db gain, at low distortion. The 600 ohm input terminates in a triode (½ of a 12AY7) voltage amplifier with gain control in the grid circuit. The 100,000 ohms, shunted across the secondary of the transformer, provides sufficient loading to reflect an impedance of 600 ohms back into the primary. The triode output employs the other section of the 12AY7 and is coupled with a plate-to-line output transformer. The primary is 15,000

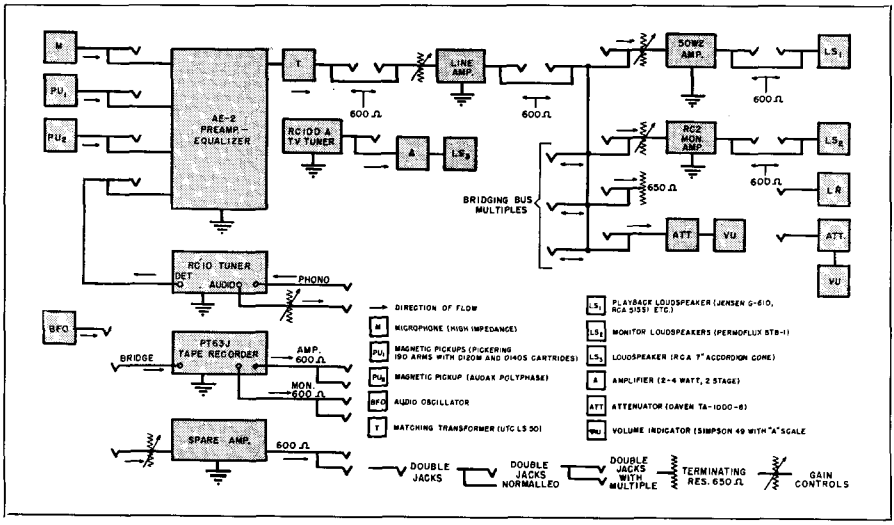

Fig. 26-8. Block diagram of the complete recording system using components discussed in the text.

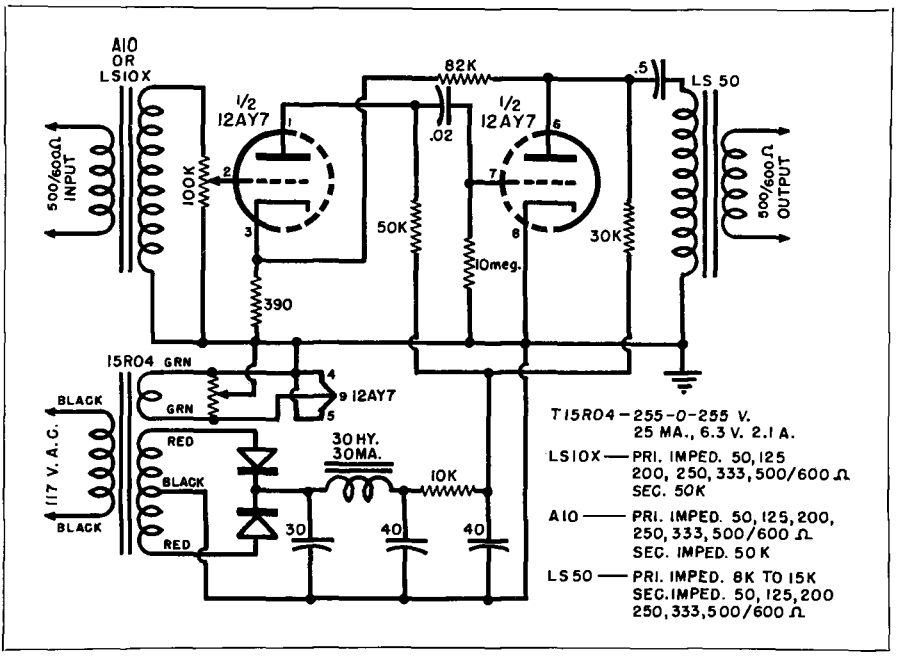

Fig. 26-9. Schematic of the line amplifier, using quality components for noise-free amplification.

ohms when so connected. The secondary is 600 ohms which is standard for all lines used in this system.

The usual rectifier tube was eliminated and instead a full-wave, bridge-type selenium rectifier employed. The 100 ohm potentiometer shunted across the filament secondary of the transformer is used to balance out hum in the filament circuit. The entire unit is mounted on the 8¾" relay rack panel which is shown directly below the jack field. The schematic diagram of the line amplifier is shown in Fig. 26-9.

The Jack Field

All program circuits terminate in the jack field. For those who do not understand the functioning of the patch system, the following will serve to illustrate the advantages to be gained from the method. Fig. 26-10 shows how the jacks would appear when connected between the preamplifier output transformer and the input transformer of the line amplifier.

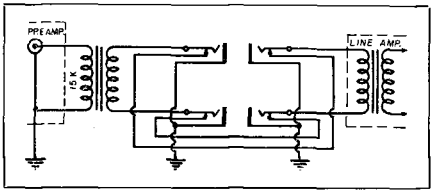

Fig. 26-10. Detailed schematic showing how double jacks connect between preamp and line amp.

In audio circuitry it is common practice to eliminate return or ground circuits from diagrams (except the program circuit). To simplify the understanding of the workings of the jack system, reference to Figs. 26-10, and 26-11 will show how a pair of double jacks is "normalled" to the following circuit. The jack (Fig. 26-12) consists of the "swinger" which is the long spring actually making contact with the tip of the plug, the frame of the jack (which is grounded), and the normal spring which, in this case, is normally in contact with the swinger. When a plug is in-

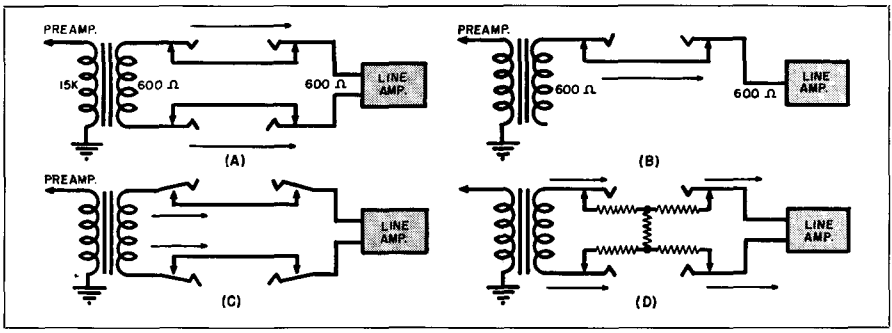

Fig. 26-11. Functional diagrams of the double jack system referred to in the text.

serted into the jack, contact is made with the swinger which raises it away from the normal spring and breaks the circuit; hence, when the plug is removed the swinger returns to place in contact with the normal spring and the circuit is completed as shown.

The system commonly employed in the jack field makes use of what is known as a "double jack system." Here both sides of the circuits are connected to the swingers of the jacks and the normal springs connect to other circuits where connection of that sort is indicated. The construction of a typical double plug is illustrated in Figs. 26-13A and B. It is good engineering practice in audio work to ground only one end of the shield of the patch cord. This is necessary to prevent ground loops. Inasmuch as all of the jack frames are at ground potential there will be proper grounding of the plug when it is inserted into any of the jacks, but at one end only. Patch cords should be checked as many come from certain manufacturers with "both ends grounded."

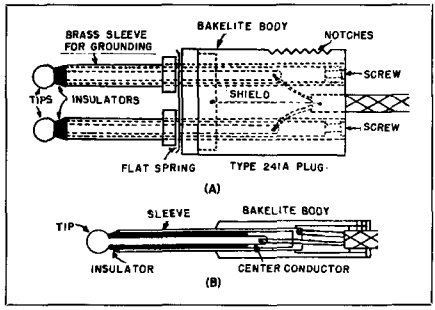

Fig. 26-13A. Construction of the double plug. Notches indicate polarity. They are normally inserted with notches to the left.

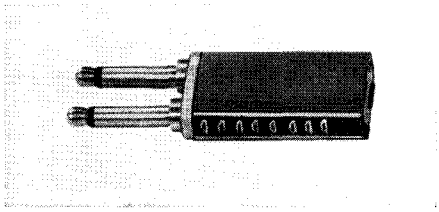

Fig. 26-13B. The standard patch cord plug employed in common double jack systems.

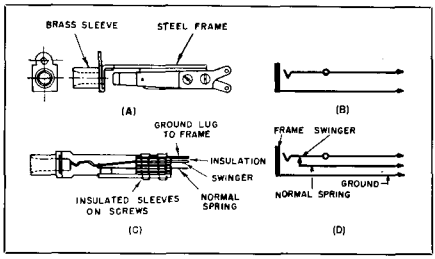

Fig. 26-12. Construction of standard jacks of the types widely used in audio systems.

Another system, used by *CBS* and by certain recording studios, is a "single jack" system. Its only difference lies in the mechanical construction of the jacks and plugs. The plug is illustrated in Fig. 26-14 and its patch cord in Fig. 26-15.

To further illustrate the action of the jacks, we refer you to Fig. 26-11A. Here the secondary of the transformer is

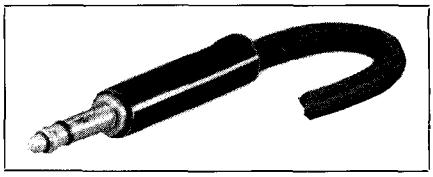

Fig. 26-14. Illustrating the jack employed by CBS in single jack systems.

shown in its "normalled" connection to the line amplifier. When connected in this fashion, the signal will flow as indicated by the arrows. Fig. 26-11B is the simplified version of the same circuit, with only one side of the line indicated. This same technique is used throughout the diagram of Fig. 26-8 to show the jacks and their use in the entire system.

When the double plug is inserted from the patch cord the action illustrated in Fig. 26-11C will take place. Here the swingers are lifted from contact with the normal springs and the circuit is broken, as far as the normal springs are concerned. By inserting a double plug the program would continue if one end of the patch cord were inserted into the output jack of the preamp and the other end into the line amplifier input jacks. There are many cases where it is desirable to break the circuit at this point, either for measurements or to introduce the signals from an audio oscillator, etc. Another use is found in the inclusion of a "loss pad" which affords isolation between the preamp and the line amp. Such a loss pad may be constructed to provide any fixed loss. It may be connected permanently in circuit with the normal springs as shown in Fig. 26-11D or it may be made up into a separate unit and patched into the line at the point shown.

Note that grounds are not shown except on the individual pieces of equipment on the diagrams. Each unit is grounded to the "ground bus" at only one point in order to prevent ground loops. The grounding system comprises a pair of No. 8 copper wires, securely connected to a cold-water system and terminating in a special terminal block within the racks of the audio bay. Circuits are usually grounded in order of their level. For example, the most direct connection through the grounding bus to the cold-water system is from the phono input, microphone inputs, preamp, line amp, etc., in that order.

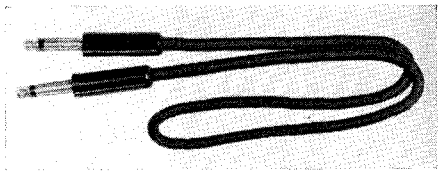

Fig. 26-15. A patch cord used in a single jack system.

It is of extreme importance in audio work that a good return-to-ground be made on all equipment to reduce the normal residual hum and noise of the system. Waterpipes which are buried underground are probably the most effective for average use.

The physical layout of the jack field must receive careful consideration. Program circuits of low level should be widely separated from those of power circuits, especially when they carry signal levels that differ by approximately 20 db. In the layout shown, nearly all of the low-level inputs are located at the left hand side of the jack panels, as shown in Fig. 26-3. All power level circuits are situated at the extreme right of the jack panels. Shielded 2-wire cable of low loss is used to connect the various units in the entire system. Those of low level circuits are grouped together and brought in at the left side of the rack while those of high level are brought in from the right side of the rack. They are all 2-wire, cotton-covered shielded cable. After having been dressed in place, they are covered with spaghetti tubing. This eliminates shorts in the cabling and permits grounding of each cable at one point only, usually at the jack of the circuit.

It is advisable, when laying out the jack fields, to locate them so that they will be conveniently located for insertion of the patch cords and so that the identification of each jack may be easily seen. It is obvious that great flexibility is afforded by use of the jack field. With it we can make insertions or connections

either into or from various circuits and components for purposes of tests or for monitoring. Furthermore, by providing multiple jacks on commonly used circuits, such as the "bridging bus" we are able to substitute, lift or bypass certain units when required. The multiple jacks are nothing more than parallel (duplicate) connections which do not employ a normal spring. They are simply a convenient means for reaching a circuit by means of a patch cord.

When the jacks are properly normalled and when the impedance of the bridging bus is held to 600 ohms (±10%) the entire system is operative without any patch cords inserted. Changes in circuitry may then be made without materially changing the loads.

The Bridging Bus

The main point of distribution in the record-reproduce system under discussion is called the bridging bus. By maintaining a constant (bus) impedance of 600 ohms, various circuits may be added to the bridging bus and accurate measurements made.

This applies particularly to the use of standard volume indicator meters (Fig. 26-16) which are designed and calibrated to give accurate readings when connected across a source impedance of 600 ohms. (Described in Chapter 8). The bridging bus, shown in Fig. 26-17, is

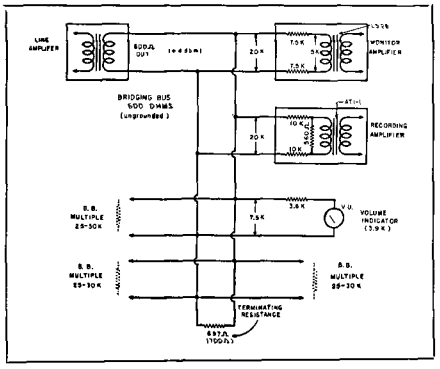

Fig. 26-17. Diagram of the bridging bus. Jacks are omitted for simplification.

"unbalanced" and no ground connection is employed. A fixed level of plus 4 dbm is maintained across the bus. A volume indicator (vu meter) is permanently connected across the bridging bus so that a level of plus 4 dbm may be set (Fig. 26-16).

The design of the bus is rather simple. The first requirement is to place all permanently connected units across the bridging bus and to determine, by Ohm's Law for parallel resistance, the total net impedance of all units. For bridging purposes, transformers, (other devices are also used) which normally connect across the bridging bus, are designed to have a basic primary impedance of from 500 to 600 ohms. When adding several of these in parallel the net impedance will be too low and will not match the normal 600 ohm impedance of the bridging bus. Therefore it is necessary to use what are

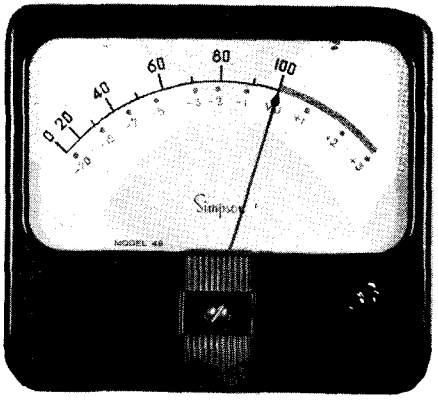

Fig. 26-16. Standard VU meter with A scale indicating zero VU. (Courtesy Simpson Electric)

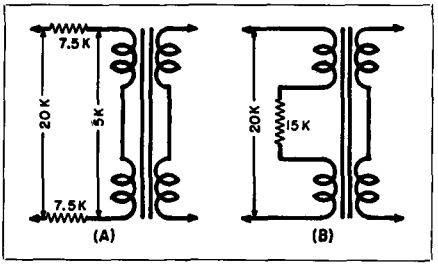

Fig. 26-18. Showing two methods of adding build-out resistors across low impedance primaries to make them suitable for loading the bridging bus.

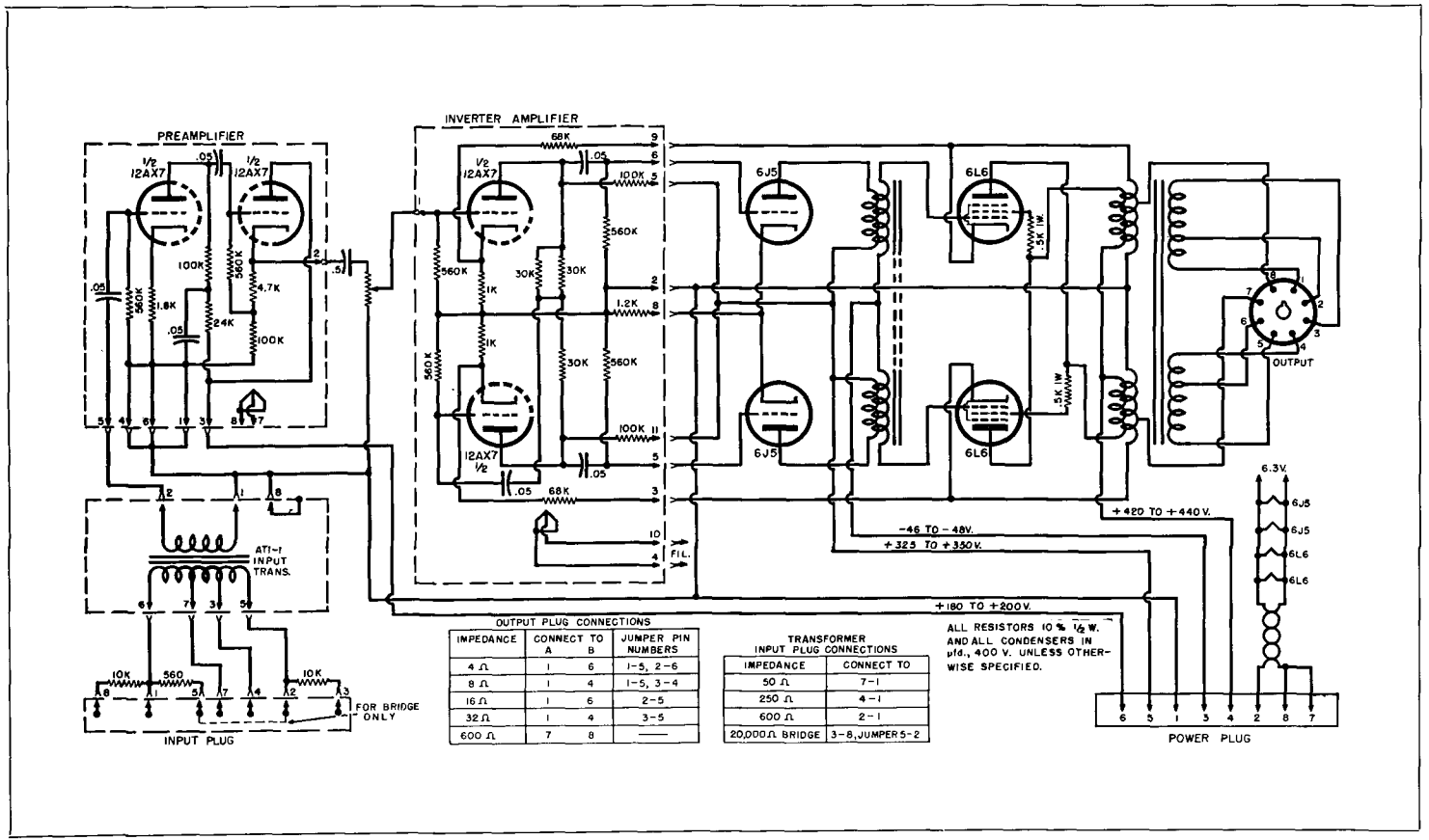

OUTPUT PLUG CONNECTIONS

IMPEDANCE	CONNECT TO A	CONNECT TO B	JUMPER PIN NUMBERS
4 Ω	1	6	1-5, 2-6
8 Ω	1	4	1-5, 3-4
16 Ω	1	6	2-5
32 Ω	1	4	3-5
600 Ω	7	8	——

TRANSFORMER INPUT PLUG CONNECTIONS

IMPEDANCE	CONNECT TO
50 Ω	7-1
250 Ω	4-1
600 Ω	2-1
20,000 Ω BRIDGE	3-8, JUMPER 5-2

Fig. 26-19. Schematic of the McIntosh 50W-2 recording amplifier.

known as build-out resistors (Fig. 26-18) in a network terminating to the primary of the input transformers of the amplifiers.

The 50W2 amplifier (Fig. 26-19) has built-in provision for a 20,000 ohm bridging input. To accomplish this, two 10,000 ohm resistors are connected in series with the primary of the input transformer.

The monitor amplifier was modified for bridging input purposes. The *Radio Craftsmen* RC-2 amplifier normally has input direct to 6J5 grid shunted with a 1 megohm resistance. See Fig. 26-2. A *UTC* type LS26 input transformer was added to the amplifier. Normally this transformer has a rated primary impedance of 5000 ohms. To make it suitable for bridging purposes, two resistors, having values of 7500 ohms each, were added in series with each side of the primary. See Fig. 26-18A. This results in a load impedance of 20,000 ohms.

Another item that must be considered when designing the bridging bus is the impedance presented by the volume indicator (vu meter). As it comes from the factory, the standard NARTB vu meter (Fig. 26-16) has an internal impedance of 3900 ohms. This value is too low for bridging purposes. Therefore a resistor of 3600 ohms is added in series with one side of the meter to bring the total impedance to 7500 ohms.

It is good engineering practice to avoid any load across the bridging bus that is not at least 10 times the impedance of the line, which in this case would be 600 x 10 or 6000 ohms. By adding the series resistance of 3600 ohms to the volume indicator meter, a loss of 4 dbm results, but inasmuch as the line itself is set for a program level of +4 dbm this will read zero vu or 100 on the scale of a standard vu meter (A scale). In other words, the program is set so that the vu meter indicates zero for practically all applications of either recording or playback in the particular system being discussed.

A bridging bus terminating resistor is added in parallel across the bus (Fig. 26-17) so that the output of the line amplifier will "see" its correct load. Since the bus originally consisted of three (20,000, 20,000 and 7500 ohm) loads in parallel, the addition of a bridging bus terminating resistor (R_T) is required to bring the combined load down to 600 ohms.

$$\frac{1}{600} = \frac{1}{20{,}000} + \frac{1}{20{,}000} + \frac{1}{7500} + \frac{1}{R_T}$$

Solving this equation for R_T gives a value of 697 ohms for the terminating resistor.

A 700 ohm (± 1%) unit is used. The quality of the terminating resistor must be high so that no noise is added to the program circuit. It is best to use a wire-wound non-inductive type of resistor made especially for the purpose.

Provision has been made, in the form of bridging bus multiples (Fig. 26-17), so that additional high impedance circuits may be added without seriously affecting the impedance of the bridging bus. For example, we may connect a high impedance remote amplifier to the bridging bus, providing its input impedance is approximately 25,000 or 30,000 ohms. Likewise, when it is desired to feed a signal from the bridging bus to the input of the magnetic tape recorder, we may do so without presenting serious loading to the bridging bus which would upset its characteristics. Another application is to patch in a pair of high impedance headphones for monitoring purposes direct from the bridging bus. If other amplifiers are to be used in a system employing a bridging bus they must all be designed so that the primary load, presented by the amplifier, is somewhere in the vicinity of 25,000 ohms.

As mentioned previously, the signal level across the bridging bus is set at plus 4 dbm. Note that the reference "dbm" applies to a signal reference level of 0 db equal 1 mw across an impedance of 600 ohms. This reading should not be confused with older methods of indicating power level where db refers to 6 mw reference level. In recording it is accepted practice to employ the term dbm whenever the reading is taken with a vu meter across a load of 600 ohms.

The Monitor Amplifier

The author had on hand a *Radio Craftsmen* RC-2 amplifier and it was decided to employ this unit for purposes of monitoring. As previously explained an input transformer was added for bridging purposes. See Fig. 26-2. Another modification includes the addition of a .25 μfd condenser between the 50,000 ohm loading resistor across the secondary of the transformer and the input grid of the RC-2 amplifier. The fixed resistance R_1 was replaced with a .5 megohm gain control so that a preset level could be made to the input of the amplifier and further adjustment made when required to either raise or lower the monitoring level.

The output of the amplifier has a 500 ohm tap. This represents the highest impedance available from the output of the amplifier. Normally, it is connected in the circuit to feed a 600 ohm line to a monitoring loudspeaker. Note: Reference is often made to a 500/600 ohm output on a power amplifier. Usually it makes no difference what rating is employed.

The Recording Amplifier

Certain basic conditions must be taken into account in selecting audio amplifiers and associated equipment for high quality recording-reproduction. The design features of the system must provide a frequency range at least equal to the original sound and be able to reproduce it at a desirable level.

Very thrilling and realistic reproduction of sound has been achieved when the listener, with his eyes closed, cannot differentiate between the recording and the original sound. This can be closely approached with equipment now available, even with systems designed for the home. This realism is tied in with several basic factors: Distortion defined in three ways—harmonic, intermodulation, and phase. These are virtually interrelated and if, for instance, the intermodulation distortion, which is distortion caused by the mutual effect of two or more frequencies, is sufficiently low (below 1%), then it is quite likely that both the phase and harmonic distortion will be low.

It also follows that if the distortion figures are kept low the gain frequency characteristic of the amplifier will not only include the audio spectrum, but extend considerably above and below the range 20 to 20,000 cycles. The ear is much more sensitive to distortion than is usually believed, as shown by the following test. If several different frequencies are used with a simple AB switch, and if the distortion is increased from 2/10ths to 7/10ths of a per-cent, using conventional speakers and without changing the audio level, it will be found that about 95% of the people tested can hear this change. It can be said, therefore, that perhaps there is no lower limit to which the distortion should be taken for most satisfactory and noticeable results. Further it seems that distortion in one part of the circuit, such as the speaker, does not mask the distortion in another part of the circuit. Probably it can be shown that the opposite is true. Since the most nonlinear portion of the circuit at some of the frequencies involved is usually the audio amplifier, it is logical to improve this part of the circuit first.

In order to give meaning and justify the transmission of the entire audio band, some of the basic characteristics of speech and music may be of interest. A bass drum at 20 cycles would deliver an enormous amount of energy from 120 to 130 db above the threshold of hearing. That actually approaches the threshold of pain. These peaks of power are equaled by such instruments as the pipe organ, even at 20 cycles, and by large orchestras. Since these peaks of power occur only for short periods of time they do not act as a physical irritant, but provide that feeling of depth and grandeur which only the low frequencies can give.

On the other end of the spectrum (at 15,000 cycles and above), the crash of the cymbal will deliver energies up to the threshold of pain, or intensities of 110 to 120 db above the threshold of hearing. Practically all other sounds of

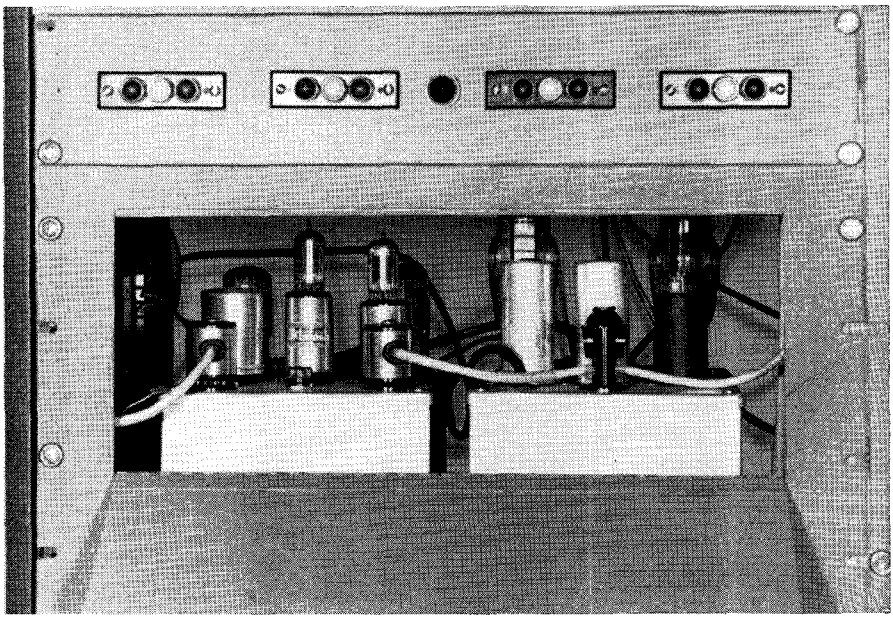

Fig. 26-20. The 50W-2 is mounted back of a hinged panel for easy mounting. (Courtesy RADIO & TELEVISION NEWS)

the musical score have peaks of equal intensity somewhere between these two frequency limits. Thus we have the minimum limits required for the adequate reproduction of all the sound of speech and music, rather well defined. It is important, therefore, than an amplifier to be used in a quality recording system be chosen with great care and that due consideration be given to the above requirements.

Reference to the circuit, Fig. 26-19, shows the plug-in features to be found in the recording amplifier. A 20,000 ohm bridging input is provided by the addition of the AT1-1 input transformer connected as shown. There follows a preamplifier employing a 12AX7. The output of the preamp feeds through a gain control to the input of the inverter amplifier. This is also of a plug-in construction to facilitate servicing. The 50W-2 mounting is shown in Fig. 26-20.

One of the unusual features of the *McIntosh* design is to be found in the method of employing extremely close

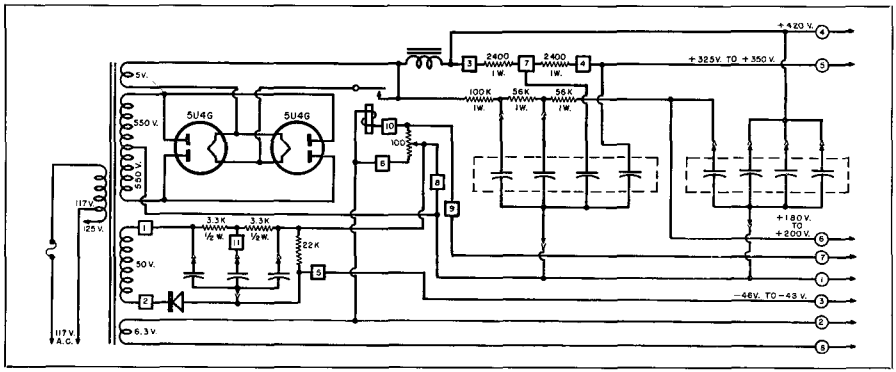

Fig. 26-21. Schematic of the McIntosh 50W-2 power supply showing protection relay circuit.

coupling with specially designed transformers. This results in very low generator impedance which makes it ideally suited to disc recording applications. A 600 ohm winding is available at the output. This is usually connected through a pair of "normal" jacks to a 600 ohm line, driving the playback speaker, or in the case of recording, is patched into a 500 ohm *Presto* 1C cutter.

The amplifier power supply (Fig. 26-21) also includes several plug-in components such as the bias supply, the delay relay which withholds the application of high voltage until the filaments are thoroughly warmed, and various high voltage condensers which may require occasional replacement.

COMMERCIAL RECORDING SYSTEMS

It is costly to the point of being impractical in many cases to design an initial audio recording installation so complete and versatile that it will meet the many special needs that may arise in the course of time. And it is expensive for recording engineers to build their own equipment, even though individual studio requirements vary so widely that custom design is highly desirable.

Recognizing this situation, *Fairchild* engineers made an exhaustive study of recording installations now in use.[2] A subsequent analysis of the information obtained disclosed that recording equipment can be reduced to a series of basic, standardized units which can be combined in accordance with the needs of simple or elaborate systems.

The study showed that any installation, small or large, can be built from combinations of some or all of 14 basic components.

Basic Units of Equipment

While there might be a difference of opinion concerning some of those listed, it must be borne in mind that the selection by *Fairchild* engineers was weighted by consideration of two important factors. These are the desirability of avoiding (1) obsolescence of initial units as studio facilities are expanded, and (2) loss of initial investment resulting from such obsolescence.

A list of units drawn up at the conclusion of their study includes:

1. Power Amplifier
2. VU Panel
3. NARTB Equalizer
4. Input Switching Panel
5. Output Switching Panel
6. Mixer Panel
7. Preamplifier
8. Auxiliary Power Supply
9. Line Amplifier (booster and monitor applications)
10. Diameter Equalizer
11. Pickup Preamplifier-Equalizer
12. Cueing Amplifier
13. Bridging Device-Isolation Amplifier
14. Variable Equalizer

Basic Studio Requirements

For purposes of explanation assume that the first requirement is for single-channel recording from a line level source (such as a radio tuner). The unit common to all installations is the amplifier supplying power to the cutterhead. Many amplifiers deliver insufficient power at frequencies below 70 cycles and above 4,000 cycles. In order to gain driving power at these important low and high frequencies, some amplifiers have been designed with as high as 50 watts output *at the middle frequencies*. A 30-watt amplifier with constant power output *over all the frequency range* is ideal and is desirable from the economy standpoint. The power amplifier, Fig. 26-22, should have its own gain control for setting audio levels, or for riding gain on a single channel. Such a fundamental installation, including a means for measuring the audio level fed to the cutterhead, is indicated in Fig. 26-23.

If it is desirable to record from a low-level source (such as a microphone or pickup) an input switching panel with a built-in preamplifier is recommended because of its versatility. This can be a

[2]Wortman, Leon, A., "Design of Recording Systems," FM & Television, Oct. 1949.

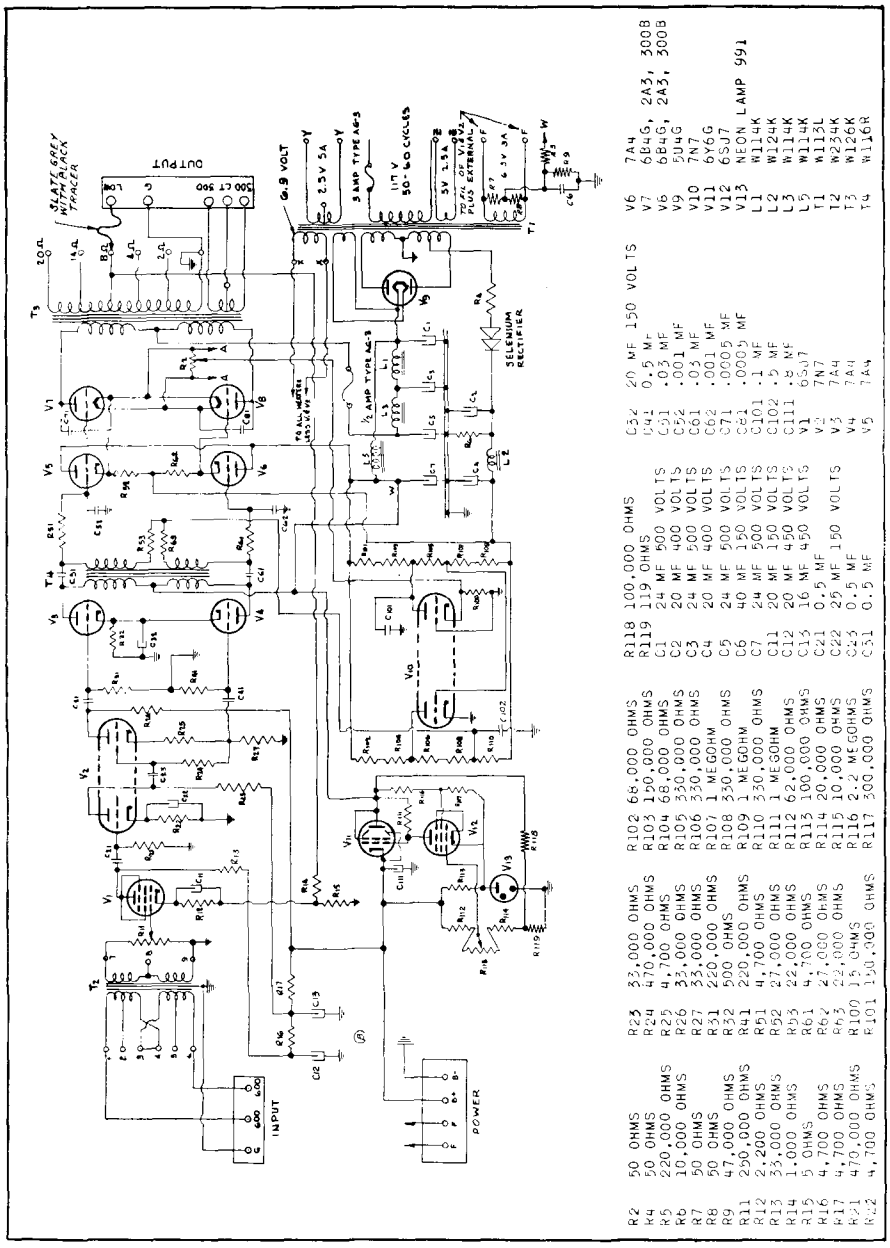

Fig. 26-22. Schematic wiring diagram of the Fairchild Unit 620 power amplifier.

compact, rack-mounted device containing a preamplifier with a switch to select audio from a variety of sources. These inputs would include microphones, pickups, and a zero-level line. When the input selector switch is in the *Line* position, the preamplifier is bypassed.

Purpose of NARTB Equalization

The materials of which the recording

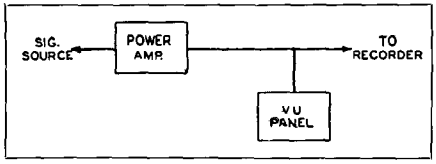

Fig. 26-23. The basic single channel circuit.

disc are composed include relatively rough particles. The effect of these particles in contact with the reproducer stylus is one of objectionable noise. The characteristics of constant-velocity recording are such that the energy put on a disc decreases as the frequency of the recorded signal increases. As a consequence, the ratio of signal to inherent noise decreases at the higher end of the audio spectrum. If the sound energy put on a disc is deliberately increased in direct proportion to the frequency of the recorded signal, it is possible to maintain a nearly constant ratio of signal-to-noise over the entire audio spectrum.

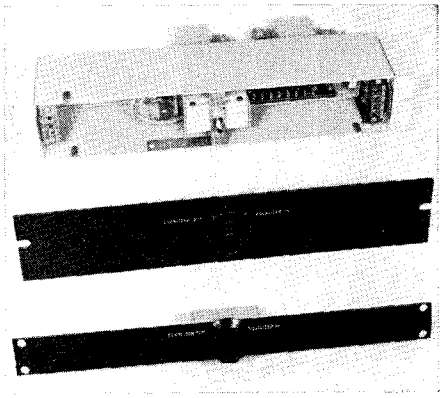

Fig. 26-24. Fairchild 626-B1 and 626-A1 NARTB equalizers. (Courtesy Fairchild)

The NARTB Recording and Reproducing Standards Committee realized that, in order to produce discs with a high signal level above the inherent noise, the frequencies above approximately 1,000 cycles have a rising characteristic. It was proposed that a 10,000 cycle signal be 16 db higher than a 1,000 cycle signal. With the adoption of this standard, it was possible to design a simple and inexpensive equalizer, Fig. 26-24, that can be inserted in the audio line to produce this characteristic curve automatically. By recording with this rising characteristic and playing back with a complementary equalizer to attenuate the high frequencies between 10,000 and 1,000 cycles by a like amount, the signal-to-noise ratio is maintained at higher frequencies and the recorded program material is reproduced exactly as the original. An NARTB equalizer inserted ahead of the power amplifier, meets this standard. The equalizer can be quite compact, mounting in a rack panel space as small as 1¾ in. A switch is needed to permit instantaneous insertion and removal of the equalizer from the electrical circuit. Passive equalizers necessitate insertion losses. If this insertion loss cannot be tolerated, an additional booster amplifier is required.

Adding Another Channel

Facilities to feed two recorder channels for simultaneous and/or (continuous) recordings are easy to add. Figs. 26-25A and 26-25B diagram two installations which accomplish these objectives. Fig. 26-25A is the more elemental. It can be expanded to the installation shown in Fig. 26-25B with some interest-

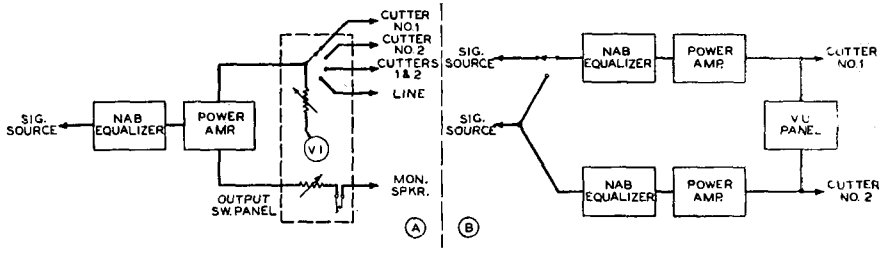

Fig. 26-25. Alternate arrangements for feeding two recorder channels.

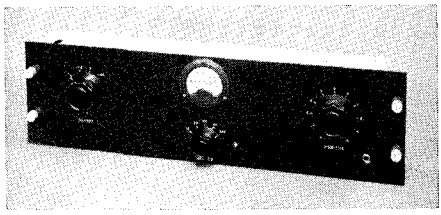

Fig. 26-26. Fairchild Unit 624 output switch panel. (Courtesy Fairchild)

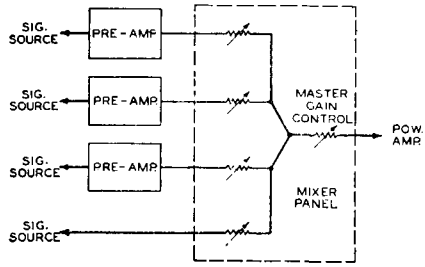

Fig. 26-28. Set up for multiple channel mixing.

ing advantages. The second installation allows complete control of the audio levels and of the program material being fed to the separate recorders. Two completely different programs or an original and a safety disc of the same program can be cut at the same time. Installation 26-25A limits the facilities to recording one program at a time. The output switch panel, Fig. 26-26, indicated in Fig. 26-25A serves the functions of the VU panel in Fig. 26-23. A four-position switch permits instantaneous transfer of audio from the power amplifier to cutterheads 1 and 2 singly, cutterheads 1 and 2 simultaneously, or to a line. The output switch panel includes a VI meter, meter attenuator and vernier calibrator, a gain control for the monitor loudspeaker fed from an auxiliary winding on the output transformer of the power amplifier, and a phone jack mounted on the panel. Plugging a headset in the jack automatically silences the loudspeaker.

Many recording installations require the simultaneous operation of multiple input channels. Adding a mixer panel provides for combining audio from any desired number of signal sources, Fig. 26-27. A separate gain control is used on each signal source for mixing and balancing the separate signals. A master gain control for setting the over-all level and fading is part of the unit.

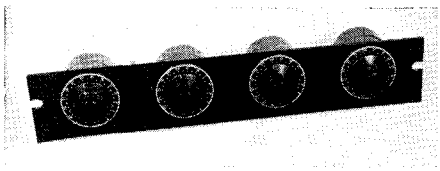

Fig. 26-27. Fairchild Unit 629 Mixer Panel. (Courtesy Fairchild)

Multiple-Channel Mixing

A representative installation for multiple-channel mixing is shown in Fig. 26-28. The number of channels can be increased or decreased to suit the individual requirements. The input channels may be wired for impedances of 50, 150, 250, 500 or 600 ohms. Each preamplifier consists of a 2-stage, single-ended, fixed gain amplifier.

To allow complete and rapid interchangeability of preamplifiers, audio and power wiring should terminate in multicontact connectors, with one part secured to a fixed mounting tray and the other on the amplifier assembly. To eliminate hum, the power supply for the preamplifiers should be external to the units. An auxiliary power supply, designated as a basic unit for most recording systems, should deliver 300 volts dc up to 210 ma, 6.3 volts up to 8 amps, and a bias of 12 volts dc on the filament supply for further hum reduction. A selenium rectifier is recommended because it eliminates the danger of a vacuum tube rectifier filament burn-out which would disable the entire system. This calls for a three-section, heavy duty filter to provide virtually pure dc output from the high voltage rectifier.

In installations using line connections between the points of origin and the studio, Fig. 26-29, experience demonstrates that hum and noise pickup in the line may cause a severe reduction in dynamic range. In such cases, suitable pads and booster amplifiers are indicated.

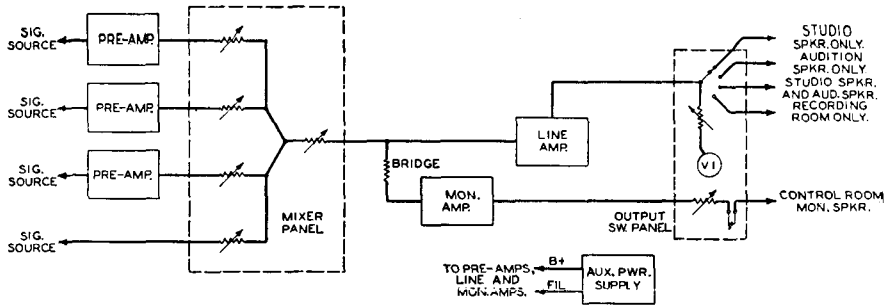

Fig. 26-29. Installation which provides for the use of three incoming audio lines.

Such boosters, or line amplifiers, must have sufficient gain to overcome line-pad losses, and sufficient power-handling capabilities to accommodate program peaks without overloading.

These units, indicated as line and monitor amplifiers in Fig. 26-29, should have over-all gains of 50 db in order to feed +22 db into the program line with less than 1% distortion from 30 to 15,000 cycles. About 8 watts output is needed for the monitor speaker. By using the same type of amplifier for line and monitor functions, one of these units can act as a spare for both purposes.

The output switch panel shown in Fig. 26-26A is ideally suited to the type of installation shown in Fig. 26-29. The control room operator can select any one of three lines for audio feed. A practical example: one line feeds the recording room, a second line feeds a monitor speaker in the studio, and the third line feeds a monitor speaker in the audition lounge. Two of the lines can be fed simultaneously. When checking a playback recording, simply selecting the proper position on the output switch automatically feeds the audio to the audition lounge for sponsor's appraisal, and to the studio loudspeaker for artists' appraisals. The control room monitor speaker is operative at all times and has its own gain control. The monitor gain control, headset jack, VI meter and meter attenuator are all mounted on one panel with the output selector switch.

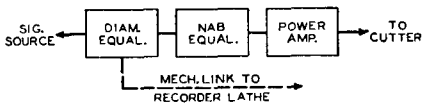

Fig. 26-30. Showing where the diameter equalizer is inserted.

Diameter Equalization

In recording from outside to inside of a disc, losses in reproduction increase as the diameter decreases. This effect increases at the higher frequencies and varies with disc velocity, making diameter/frequency equalization desirable at 33⅓ rpm. By increasing the high frequency input as the cutterhead moves toward the inside diameter, this loss can be overcome. A 10,000 cycle signal should be 8 db higher than a similar 1,000 cycle signal at the inner diameter.

An automatic device with predetermined correction is included in the list of basic units for the recording system.

The proper place to insert the diameter equalizer in the recording channel is shown in Fig. 26-30.

Equalizing Pickups

The professional recording installation includes playback equipment for auditions, dubbings and special effects. With the numerous types of pickups needed to reproduce the present variety of commercial and instantaneous discs, the problem of supplying each pickup with an equalizer has increased equipment costs heavily. Equipment invest-

ments can be reduced by eliminating the need for separate equalizers, and making one equalizer serve all the pickups.

A preamplifier and equalizer that are independent of source impedance can be combined in one basic unit. Any constant-velocity pickup (vertical, lateral, microgroove, or standard) regardless of its impedance, can be operated directly into the input of such a unit without affecting the frequency characteristics of the pickup itself. Equalization can be accomplished after a built-in stage of preamplification, isolating the pickup from the equalizer itself. Since equalization is achieved at comparatively high audio level, hum pickup often encountered in passive-losser equalizers is avoided. The output of this basic unit should be at mixer level to eliminate the danger of hum and noise pickup in the audio wiring between the pickup and the mixer console. It is best to mount it inside the turntable cabinet, upright, with the equalization selector switch protruding through the turntable deck in a position convenient to the operator. If properly designed, there is no danger of hum pickup from the turntable drive motor. The use of dc filament voltages overcome another common source of hum pickup. RC equalization results in smooth curves, free from resonant peaks within the usable audio spectrum. A 6-position selector is adequate to give a wide choice of vertical and lateral equalization curves.

To provide a means for cueing the discs on the playback turntable, a small 2-stage, push-pull amplifier capable of feeding 3 watts of audio to a loudspeaker is more than adequate. With a 10,000 ohm input impedance through a bridging transformer, it can be connected across any low impedance line, such as the output of the preamplifier-equalizer, without reflecting a mismatch. A popular custom is to mount the cueing loudspeaker on the front panel of the turntable cabinet. A switch in series with the voice coil is required to silence the loudspeaker during the actual playback.

Patching Circuits

It is often necessary to feed more than one circuit from a signal source. It may also be desirable to lift one of the circuits at will. This lifting and inserting, or patching, of one or more circuits can be accomplished without upsetting audio levels or impedances by the simple expedient of bridging or circuit-isolating pads. The diagram of a control room installation in Fig. 26-29 shows such a pad between the input to the monitor amplifier and the output of the mixers. Since it may be desirable to patch the monitor amplifier for some other purpose, the output impedance of the mixers should be matched to the input impedance of the line amplifier, the more important of the two circuits. The pad absorbs an extremely small amount of power from the audio circuit and affords electrical isolation between the monitor and recording channels.

Bridge pads are losser circuits. Losses of 25 db in such pads are not unusual. If the requirements of the system are such that the loss cannot be tolerated, the use of another basic unit, a bridging device, is indicated. This is a single-stage, push-pull, fixed-gain, isolation-bridging amplifier. It must operate from source impedances of 600 ohms or less without reflecting a mismatch. The gain of the amplifier compensates for the loss in the bridge. Both the bridging and amplifying components can be combined in one very compact assembly.

Dubbing Methods

Dubbing has always been a bugaboo that most recording engineers would rather not have to face because of the unusual equalization problems often involved in the process. For example: A record manufacturer obtains a stock of old originals and masters from another company, and decides that time is opportune to re-issue them. However, the disc originals were made in the infant days of the recording art, and may have poor tonal quality, poor bass response, or deficient high response.

Each dubbing presents an individual

problem to the recording engineer whose concientious ambition is to make the new release as perfect as the state of the art will permit.

Also, in recording original music, the recording engineer, musical director, or other person supervising the audio quality may desire heavier bass or middle register, or more brilliance than is obtained by natural studio acoustics. These conditions all indicate the need for a versatile equalizer that can selectively boost or attenuate various portions of the audio band simultaneously. Such a variable equalizer is not required to deliver power or voltage amplification. It is essentially a zero gain device. All signal amplification is achieved by other elements in the recording system. The variable equalizer must deliver, through continuously variable controls, a broad peak at any of the bass frequencies from 20 to 100 cycles and at any of the treble frequencies from 4,000 to 10,000 cycles. Not only must it be possible to select the frequencies at which equalization is to take place, but the degree of equalization must be adjustable in amplitude from zero (flat response) to a maximum boost of 16 db. Separate controls are needed for roll-off of low and high frequencies, and there must be no interaction between the high and low frequency controls. Such a basic unit finds wide application in professional recording.

Vertical and lateral NARTB standards, private standards, broadcast audio line equalization, elimination of distorted and noise spectra, pre-emphasis and de-emphasis are all controllable for recording and playing back with the one variable equalizer unit. By mechanically linking the cutterhead with a potentiometer that is electrically connected to the variable equalizer, this unit can be used as an automatic diameter-equalizer. This technique provides the unusual control of both equalization frequencies and maximum boost level. Input and output gain controls allow for handling signals of various levels, and a magic eye on the front panel makes it possible to set the optimum input level for distortionless operation.

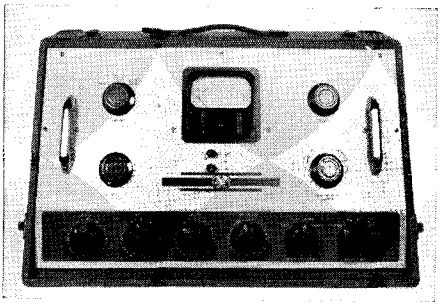

Fig. 26-31. The Presto 90-B portable recording console, described in the text. (Courtesy Presto)

Portable Recording Console

We have discussed the essentials for fixed installations in previous paragraphs. The remainder of the discussion will deal with equipment designed for remote disc recording systems.

The *Presto* 90-B recording amplifier is a portable recording console containing all the facilities necessary for operation on remote recording assignments. Fig. 26-31.

The 90-B consists of three preamplifiers with individual gain controls, a mixer circuit, a master gain control and recording amplifier. Provision is made for connecting the *Presto* 161-A automatic equalizer (radius compensator).

A five position selector switch provides the following characteristics: 1—flat response, 30 to 15,000 cps ±1 db; 2—NARTB 33⅓ rpm recording; 3—present day 78 rpm recording; 4—NARTB playback and 5—automatic equalization. (Refer to figure 26-32 for the curves showing the response characteristics of the fixed equalizers.) The flat response can be modified by variable bass and treble controls, giving emphasis up to a maximum of 20 db at 100 and 7,500 cycles per second or 20 db de-emphasis at 7,200 cycles per second. Noise is 60 db below recording level and distortion at maximum output is less than 1.5%.

The use of input and output selector switches permits combining the signals

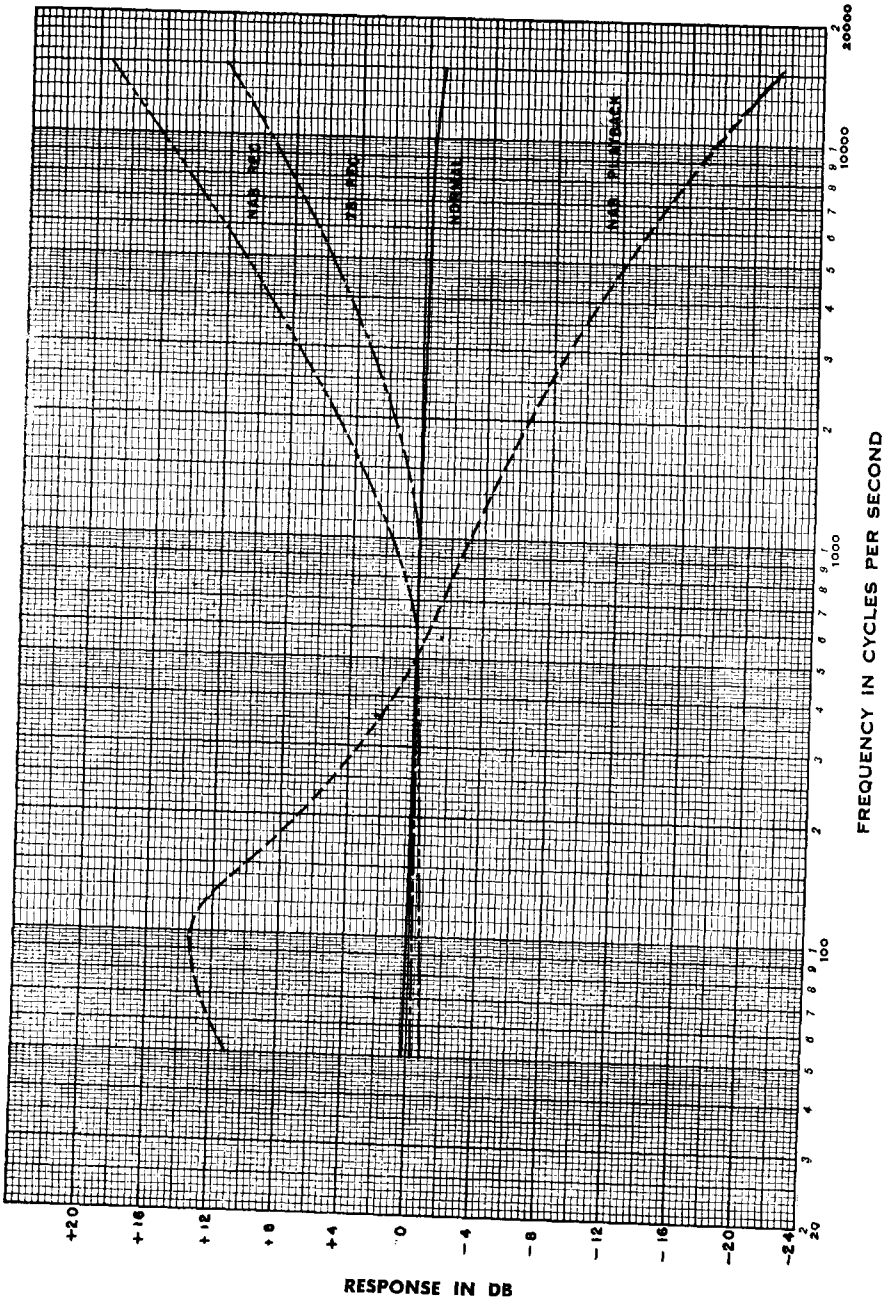

Fig. 26-32. Response characteristics of the fixed equalizers.

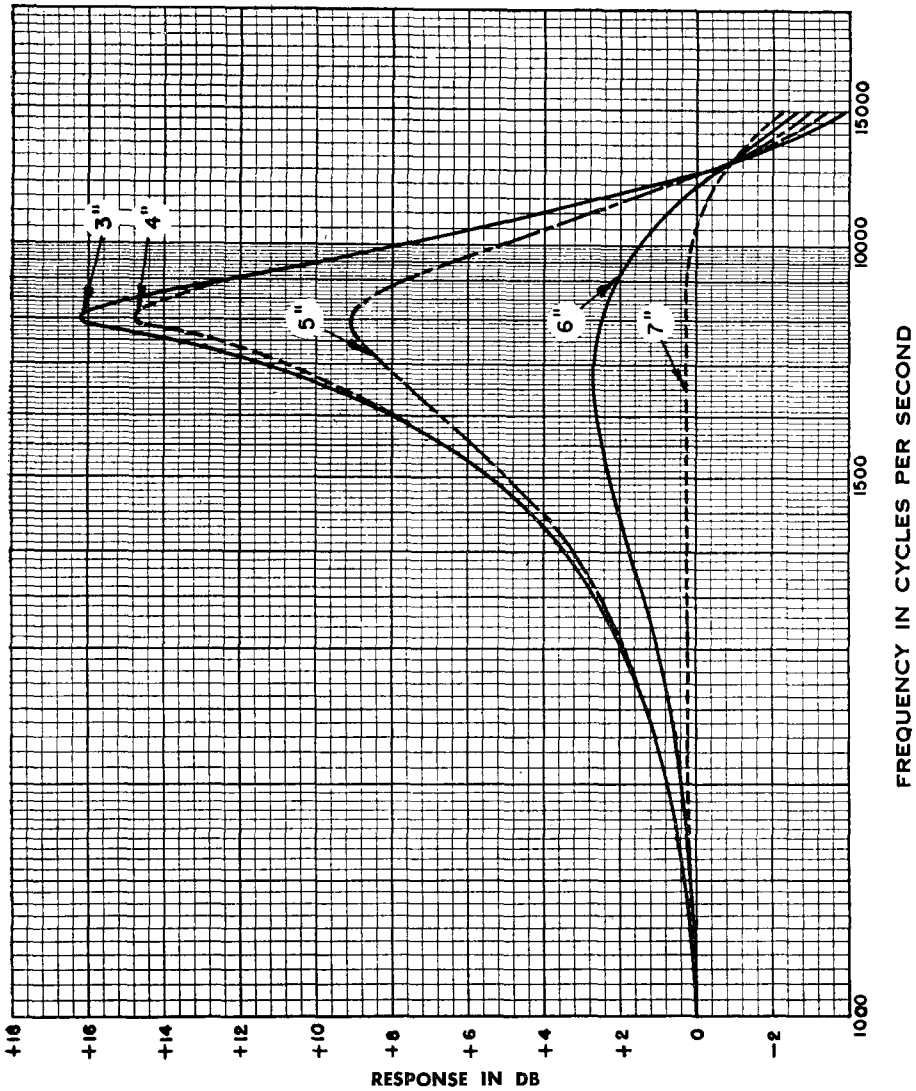

Fig. 26-33. Automatic equalizer response characteristics at various disc diameters.

of three microphones or of two microphones and either one of two pickups. By using the "Line" position, recordings can be made from an incoming program line. The output selector has three positions: playback (public address), continuous recording and simultaneous recording. While recording, the line jack provides a monitoring outlet or permits feeding a program line at the correct level. The recording level is monitored by means of a *Weston* Type 30 VU indicator.

Operation

1. Switches and their Use

Input No. 3 Selector.—This four position selector switch permits the following operations:

"P.U. No. 1": Mixing of MIC. No. 1, MIC. No. 2 and Pickup No. 2.

"P.U. No. 2": Mixing of MIC. No. 1, MIC. No. 2 and Pickup No. 2.

"MIC. No. 3": Mixing of MIC. No. 1, MIC. No. 2 and MIC. No. 3.

"Line": Line input only.

Equalization.—This five-position selector switch permits choice of the following characteristics. (Refer to figures 26-32 and 26-33 for the response curves.)

"Normal": Uniform frequency response (with both low and high frequency controls at zero.) For continuously variable low and high frequency pre-emphasis in the "Normal" position, see Low and High Frequency Control.

"NARTB Rec.": Fixed equalization corresponding to NARTB recording characteristic for lateral transcriptions. Low frequency response below crossover is determined by cutting head characteristic in this region. Tolerance 2 db.

"78 Rec.": Fixed high frequency pre-emphasis of 10 db at 10,000 cycles. Tolerance ± 2 db.

"NARTB Playback": Fixed characteristic complimentary to NARTB recording characteristic for lateral transcriptions. Tolerance (80-10,000 cycles) ±2 db.

"Radius": Automatic equalization when used in conjunction with the *Presto* 161-A Slider control. Fig. 26-33.

Output.—This three-position selector switch permits the following operations:

"Speaker": Public address and playback.

"Record Contin.": Continuous recording with one cutting head and simultaneous monitoring.

"Record Simult.": Simultaneous recording with two cutting heads and simultaneous monitoring.

Cutter.—The upper lever switch (S_5) permits selection of cutting heads. Center position neutral. The lower level switch (S_6) selects the *Presto* 161-A slider mounted on the machine with the corresponding cutter. In operation both lever switches should be flipped simultaneously.

2. Controls and Their Use

MIC. No. 1.—Linear gain control for microphone channel No. 1, 1.5 db per step, last step infinity.

MIC. No. 2.—Same as above for microphone channel No. 2.

Input No. 3.—Same as above for pickup No. 1, pickup No. 2 or microphone channel No. 3.

Master Gain.—Tapered master gain control or line gain control is 2.0 db per step, last step infinity.

Low Frequency Control.—Continuously variable low frequency pre-emphasis, maximum equalization at approximately 100 cycles is at least 20 db.

High Frequency Control.—Increase section: Continuously variable high frequency pre-emphasis, maximum equalization at approximately 7,500 cycles is at least 20 db. Decrease section: Continuously variable high frequency de-emphasis at approximately 7,200 cycles to a maximum of at least 20 db.

3. Receptacles and Plugs

Input Receptacles: The following input channels are provided at its corresponding receptacle: MIC. No. 1, MIC. No. 2, MIC. No. 3, P.U. No. 1, P.U. No. 2 and Line.

Output Receptacles, Jacks and Plugs: The following output channels are provided: Cut. No. 1, Cut. No. 2, Line, Spk., and two equalizer plugs No. 1 and No. 2 for continuous equalization.

Function of the Amplifier

Refer to the Block Diagram figure 26-34 and the schematic diagram figure 26-35 for the following discussion on the amplifier.

In high gain operation (Input No. 3 selector in positions 1, 2 and 3) the signal originating in microphones or pickups are applied through the input transformers (T1, T2 and T3) to the preamplifier sections (V1, V2 and V3). The individually controlled signals are then brought to the mixer stage (V4) through the Input No. 3 selector and the Master Gain control. The output of the mixer is fed into a buffer amplifier (V5)

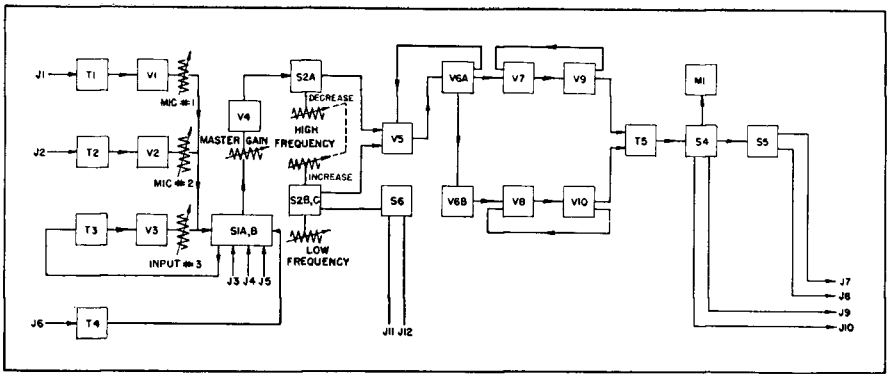

Fig. 26-34. Block diagram of the 90-B recording console.

and then into the equalizer amplifier sections and 1st audio (V6A). By means of a phase inverter (V6B) the signal is applied to a push-pull amplifier consisting of two 6SJ7 tubes (V7 and V8) to drive the 6L6 push-pull output stage (V9 and V10). A considerable reduction in distortion and noise as well as low internal output impedance is obtained through the use of a large amount of stabilized negative feedback from the 6L6 plates to the 6SJ7 cathodes.

In reduced gain operation (Input No. 3 Selector in Line position) the 90-B is converted into a single channel recording amplifier of 80 db gain with the Master Gain control used for level adjustment.

In both high and low gain operation the frequency response of the amplifier can be modified for recording or playback with the aid of the Equalization selector; the Normal (No. 1) position permitting manual control of the low and high frequency response characteristics. Variable response is obtained by means of two series-resonant circuits (C20-L3 and C19-L2) inserted in the feedback loop which decreases the feedback and produces maximum equalization at 100 and 7,500 cycles, respectively. High frequency de-emphasis is obtained by turning the High Frequency Control counter-clockwise. This varies the shunting effect of the series-resonant circuit (C18-L1) across the plate of the mixer tube V4. Maximum de-emphasis is obtained at 7,200 cycles.

With the Equalization switch in the NARTB Rec. and 78 Rec. positions a capacitor network is inserted between the feedback loop and ground. This decreases the feedback at high frequencies and results in a rising characteristic. In the NARTB Playback position a corrective R-C network is inserted between the output of the mixer tube, V4, and the input of the buffer amplifier, V5, to obtain a high frequency roll-off. The low frequency compensation is accomplished by means of a low frequency series-resonant circuit (C20-L3) in the feedback loop.

In the "Auto" position the operation of the automatic equalizer is similar to that of the high frequency emphasis circuit when the equalization switch is in the Normal position, except that the manual control (R53) is replaced by the slider in such a way that maximum equalization is obtained at the inside of a recording disc.

In recording, the "Output" selector is switched to the second or third position, depending on whether a single cutting head or two cutters are used at the same time. In the latter case the heads are paralleled across a 250 ohm tap of the output transformer by setting the lever switch marked Cutter into either No. 1 or No. 2 position. The volume indicator is adjusted to indicate correct recording

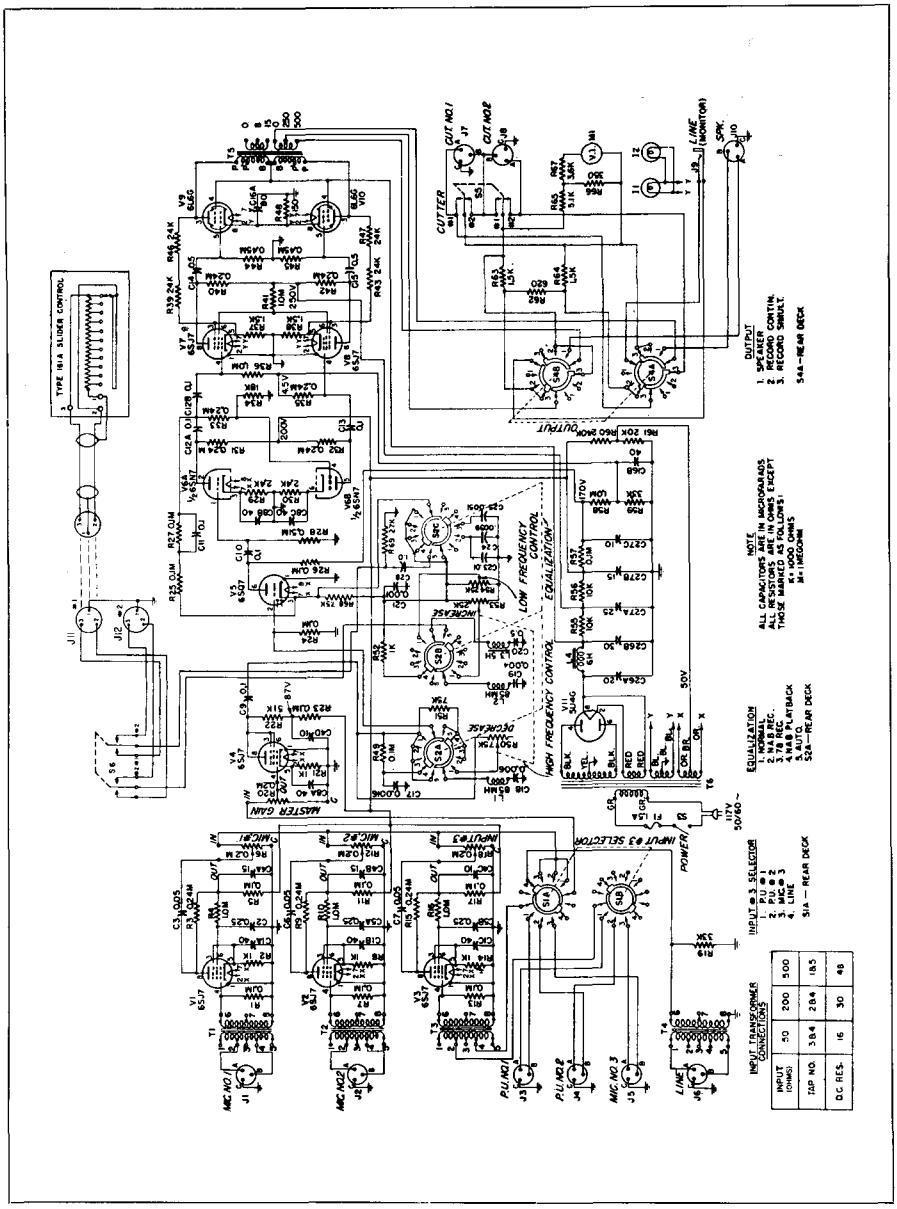

Fig. 26-35. Schematic diagram of the 90-B recording amplifier.

level for a *Presto* 500 ohm 1-D cutting head at zero VU. While recording, the Line (output) jack permits monitoring or the feeding of a 600 ohm program line at the correct level.

In using the amplifier the precautions commonly observed in operation of high gain amplifiers should be applied. They include proper grounding of the amplifier, use of shielded input and output connections and avoidance of unnecessary coupling between input and output.

SPECIFICATIONS

Input (source) Impedance:

Microphone No. 1	50,200 and 500 ohms	200 ohms standard impedance. Pre-wired at factory to customer's specifications.
Microphone No. 2	50,200 and 500 ohms	
Microphone No. 3	50,200 and 500 ohms	
Pickup No. 1	50,200 and 500 ohms	
Pickup No. 2	50,200 and 500 ohms	
Line	500 ohms	

Output (load) Impedance:

Speaker ..... 500 ohms
Outgoing Line.....balanced 600 ohms
Cutter No. 1..... 500 ohms
Cutter No. 2..... 500 ohms

Output (source) Impedance:

Outgoing Line..... 600 ohms

Gain:

Microphone/pickup to cutter/speaker (maximum power gain)..115 db ±3 db.
Line Input to cutter/speaker (maximum power gain).....80 db ±3 db.

Maximum Input Level:

Microphone or pickup.....approx. —44 dbm.*
Line input.....approx. —10 dbm.**
(0 dbm = 0.001 watt)
*at overload of preamplifier section.
**in order to maintain smooth control it is not recommended to go above approximately —27 dbm.

Signal-to-noise Ratio (at recording level):

All microphone channels and line channel at 80 db gain.....at least 55 db.

Volume Indicator Calibration:

0 VU corresponds to:
+29 dbm at 1,000 cycles into cutting head.
+ 7 dbm at 1,000 cycles into line output.

Output Level and Distortion:

Speaker or cutter (maximum).....10 watts
Distortion at maximum output
(50-7,500 cycles) less than.....1.5%

Frequency Response:

All microphone channels and line (input) channel.....30-15,000 cps ±1 db.

Panel Controls and Instruments:

Three input gain controls and a master gain control are step type controls (1.5 db per step and infinity)
Input No. 3 Selector permits the following combinations:
P.U. No. 1 Position: 2 Microphone and Pickup No. 1
P.U. No. 2 Position: 2 Microphones and Pickup No. 2
Mic No. 3 Position: 3 Microphones
Line Position: Line input only

SPECIFICATIONS (Continued)

Equalization selector:

Normal Position: Response flat with both controls at zero.

NARTB Rec. Position: NARTB recording characteristics for lateral transcriptions. Tolerance ±2 db.

78 Rec. Position: Frequency characteristic rising from approximately 1000 cps on to about 10 db at 10,000 cps. Tolerance ±2 db.

NARTB Playback Position: Characteristic complementary to NARTB recording characteristic. Tolerance (80, 10,000 cps) ±2 db.

Radius Position: Automatic equalizer when used in conjunction with the *Presto* 161-A slider.

Low Frequency Equalizer Control:

Maximum low frequency emphasis at approximately 100 cps.....20 db.

High Frequency Equalizer Control:

Maximum high frequency emphasis at approximately 7500 cps.....20 db.

Maximum high frequency de-emphasis at approximately 7200 cps.....20 db.

Output Selector:

Speaker position: Public address and playback.

Rec. Contin. position: Continuous recording with one cutting head and simultaneous monitoring.

Rec. Simul. position: Simultaneous recording with both cutters and simultaneous monitoring.

Cutter Selector

Power Switch

Power Input:

117 volts, 50/60 cps.....135 watts

Tube Complement:

6 type 6SJ7's, 1 type 6SQ7, 1 type 6SN7-GT, 2 type 6L6-G, 1 type 5U4G

CHAPTER 27

Record Manufacture (Pressings)

The processing and manufacturing steps necessary to produce an "electrical transcription" or phonograph record.

● The following sequence is used to maintain dimensional tolerances, frequency response, and fidelity.

Before the final vinylite pressing is produced, thirty-six basic manufacturing steps must be completed, each phase of which requires extreme care and strict compliance with detailed procedure.[1]

The original, or "master" recording on lacquer (the trade still refers to it as a "wax"), has inscribed upon its surface minute sound modulations as picked up by the microphone from within the studio.

To make a number of copies of this original, the "master" recording is sent to a processing plant for the generation of metal parts which are an exact reproduction of the original "master" recording.

When the "master" recording is received at the processing plant, a code or serial number is assigned to it. This number is inscribed on the surface near the label area, and for all future reference identifies this particular recording.

Having been received and coded, it is sent to the matrix department where it receives visual inspection, and in some cases microscopic inspection, before being released to processing.

Once it is released to processing, it goes to a temperature controlled silvering room, where the operator, prior to silvering, cleans the surface with a detergent and copious rinses of distilled water.

The surface is then sensitized by the application of a stannous chloride solution. This application assures the proper adherence of the deposited silver to all the minute detail of recorded groove and surface.

After sensitizing, the "master" is rinsed with distilled water and placed in a rubber tray. A chemical silver solution is now poured on the surface as shown in Fig. 27-1, and is rocked and agitated by the operator for approxi-

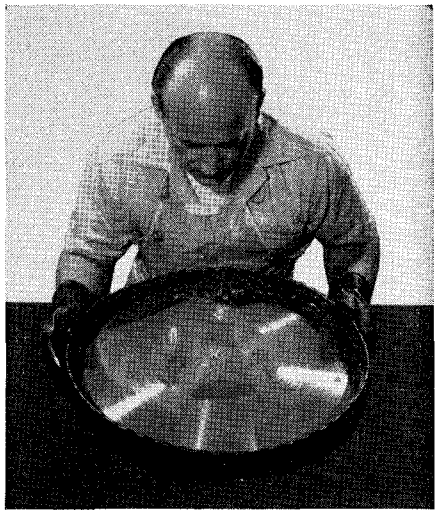

Fig. 27-1. Silverplating the "master" recording.

[1]Healy, J. D., "Processing Radio Transcriptions," Radio & Television News, Feb. 1950, p. 31.

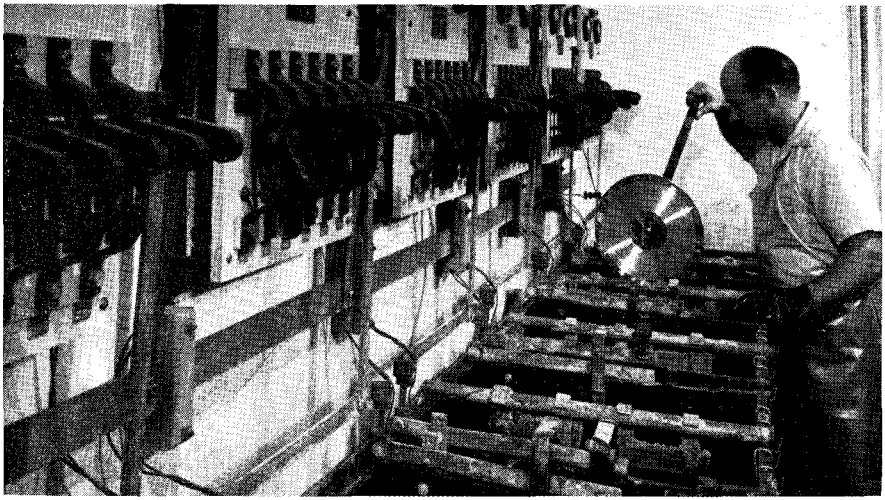

Fig. 27-2. The acid copper plating operation known as the copper preplate bath.

mately one minute during the precipitation of the silver solution. A film of metallic silver, "millionths" of an inch thick, is deposited on the surface of the "master" recording, thus making the surface a conductor of electric current.

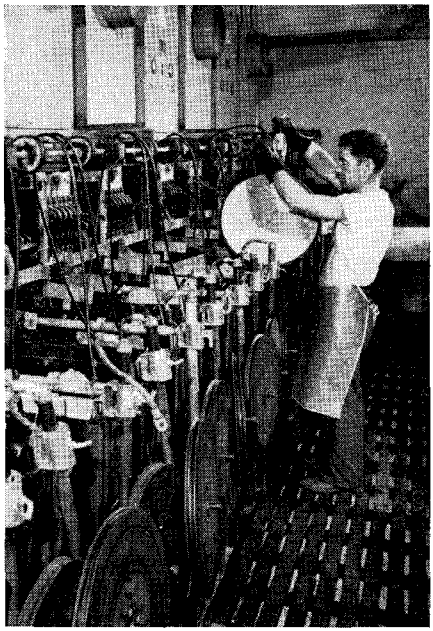

Fig. 27-3. Capper plating on a revolving hanger to insure even plating in a very active capper plating solution bath.

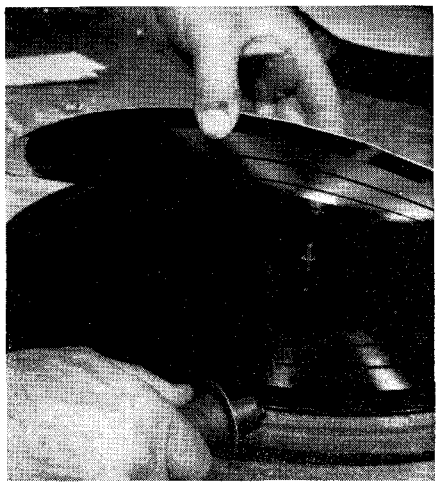

Fig. 27-4. Stripping the metal "master" fram the "master" recording.

In its original state the surface was nonconducting and electro-deposition could not be accomplished.

Now that the "master" is silvered it can be placed in an acid copper plating tank to begin the first step in the generation of metal duplicate parts. See Fig. 27-2. The copper plating adheres to the thin film of silver and exactly conforms to every characteristic of the original master recording.

Fig. 27-5. Centering to within .003 inch and center punching the "master."

After approximately 8 hours of copper plating, Fig. 27-3, a plate of .032″ of copper has been deposited on the face of the silvered "master" recording. It now has enough strength so that it can be safely separated from the "master" recording without danger of bending or damage. Fig. 27-4 shows the metal "master" being separated from the "master" recording.

We now have the first of our electroformed metal parts which is a true "negative" of the original recording. All of the infinite detail of the original sound pattern has been faithfully reproduced in a new medium—the metal "master."

The metal "master," after separation, goes to the finishing room where it is recentered to within ±.003″. This operation is accomplished on a punch press by means of a dial indicator, as shown in Fig. 27-5.

Having been re-centered and punched, the metal "master" is electro-cleaned in preparation for a nickel facing plate that will form a protective film of nickel on its surface as shown in Fig. 27-6.

After nickel facing, the "master" is again cleaned by means of a spinning wheel and naphtha solution as shown in Fig. 27-7.

Our first metal part, the "*master*" has now been finished to the point where it is ready to serve as the original (negative) in another electro-forming cycle that will produce a second part, called the metal "*mother*."

In order that copper can now be deposited upon the nickel surface of the "master" to form the next part a molecular film of oxide must be provided on the "master" that will allow the new copper to conform intimately to all detail and yet be free from bonding to the nickel surface.

This oxide film is developed chemically by the application of a dichromate solution to the surface of the "master"

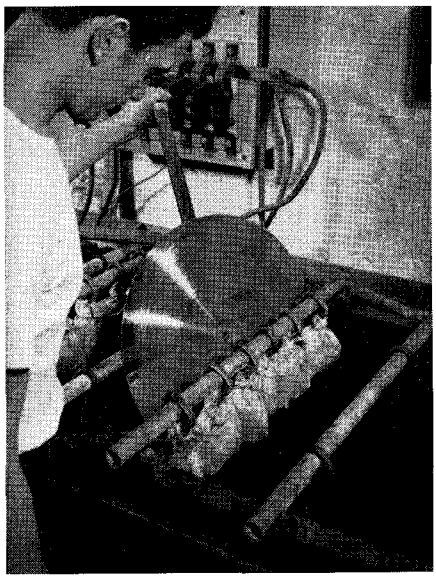

Fig. 27-6. The nickel plating operation which forms a protective surface.

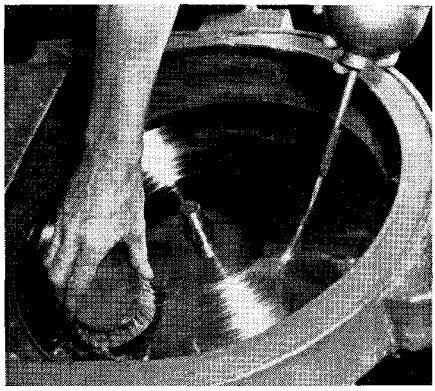

Fig. 27-7. The "master" is cleaned with naphtha while revolving on a spindle.

which makes the nickel passive. Now that the nickeled surface has been oxidized, the metal "master" is mounted on a plating hanger and immersed in the acid copper tank to begin the formative stage of the second metal part, the "*mother*," Fig. 27-8.

After approximately 10 hours of plating time, we have the first metal part, or "master," on the face of which has been electro-formed the second metal part—the "mother."

Because the copper has formed around the edge of these plates it has to be filed away until a pry tool can be inserted at the edge to separate the two parts as was done with the original and metal "master" shown in Fig. 27-4.

Having started this electro-forming cycle with the metal "master" which is our "negative," we have now formed the "mother" which is a "positive"; identical in all respects to the original "master" recording except that we now have a "positive" in copper instead of the "wax" or lacquer positive we started with.

The "mother," being a positive, can be played the same as could the original recording. And by playing it we can determine exactly the faithfulness with which we have reproduced the sounds picked up by the microphone—electrically transcribed to the "master" recording, and finally reproduced in copper metal.

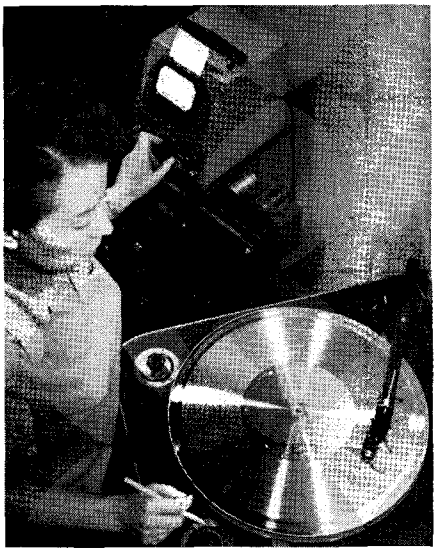

Fig. 27-9. Technician making sound test of the metal "mother" recording.

The "mother" is not only checked for tone quality, but also for signal-to-noise ratio and distortion. This test is shown in Fig. 27-9.

The term "mother" was no doubt applied to this second metal part because from it we can electro-form a number

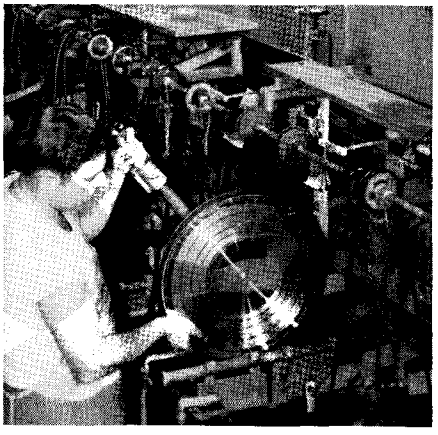

Fig. 27-8. Metal "master," upon which a "mother" is formed, lowered in bath.

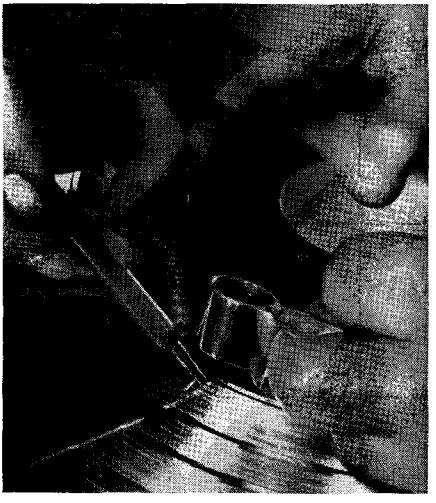

Fig. 27-10. Craftsman repairing a defective groove on the metal "mother."

of "stamper" plates, which when mounted in the record press die, will produce mass quantities of vinylite pressings identical to the "mother" and the original "master" lacquer or "wax" recording.

If at any time in the handling of these metal parts they are unavoidably damaged, a skillful repairman with the proper tools and a basic knowledge of groove contour can repair the damage so that the untrained ear has difficulty in detecting the repair. A good example of the technique of repair is shown in Fig. 27-10.

The "mother" having passed sound inspection, is now nickeled and its surface prepared for the generation of the third metal part, the "*stamper.*"

The "stamper" is electro-formed upon the face of the "mother" by the same method used in making the "mother" from the "master."

After plating it in the acid copper the "stamper" is separated from the "mother" as described before in the case of "master" and "mother," and is sent to the finishing room for proper dimensioning before being mounted into the record press die.

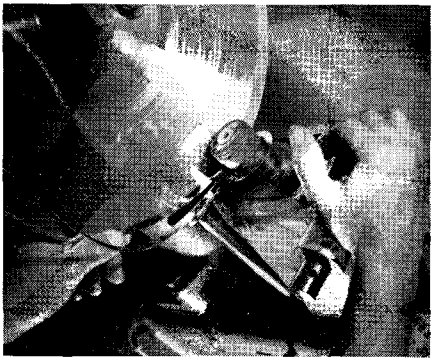

Fig. 27-12. "Stamper" is punched and sheared to fit die of the record press.

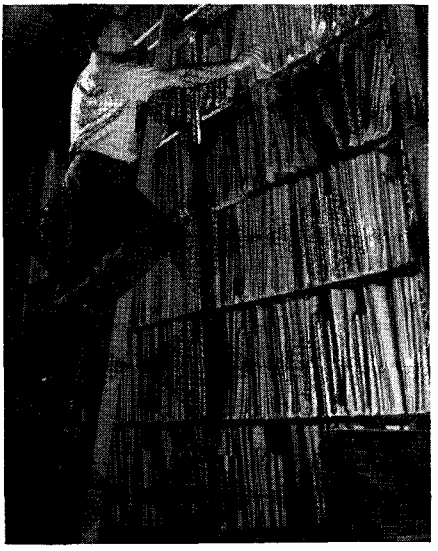

Fig. 12-13. Filing "master" and "mother" for future use.

Fig. 27-11. The surface of the "stamper" being hardened by chrome plating.

One operation of "stamper finishing" is the plating of a hard chromium film, Fig. 27-11, upon the face of the "stamper" so that it can resist the abrasive effect of the pressing material from which the final product is formed.

The "stamper" is punched and sheared to size, Fig. 27-12, and is finally checked by the Quality Control department as to dimensions, before being issued to the press department.

Fig. 27-14. The heat and high pressure of the stamping machine form the transcription from either special plastic or shellac material.

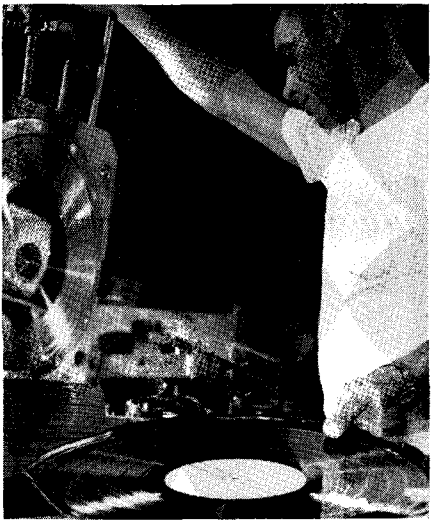

Fig. 27-15. The transcription as it comes from the die of record stamping machine.

The information compiled by Quality Control on these "stampers" is posted on three sigma control charts so that the production department can know daily whether or not the processing facilities are producing parts that fall within predetermined control limits for quality and tolerance.

The "master" and "mother," having produced the "stamper" plate, are routed to Production Control, where they are numerically filed by the code number originally assigned to the master recording upon receipt from the recording studio, Fig. 27-13. Here they remain, the property of the customer, until his further need for production on this number.

The date of receipt of the "stamper" by Production Control is noted on its code card and the "stamper" is immediately sent to the press department with labels and a production order. The code card shows the production control clerk that production on this number was promised for immediate delivery. The press department receives the "stamper" plate and the job is routed to the first available press.

The "stamper," having been mounted in the record die, is ready to make the first impression, Figs. 27-14 and 27-15. This first pressing will be sent to Sound Check where it is played completely before an order to continue production can be given.

As production continues, the pressings arrive at the visual checking point and

Fig. 27-16. Visual inspection of each transcription.

are checked for any flaws that would affect the play of the record or detract from its appearance, as in Fig. 27-16.

When the production of this order has arrived complete in the shipping department, the shipping clerk checks his shipping instructions and prepares the necessary shipping labels, waybills, etc., required to get these units of production to their required destination in the time originally specified by the customer.

The quality and engineering standard to which these electrical transcriptions must be produced for proper presentation over the air have been set by the NARTB.

CHAPTER 28

Audio Measurements

Measurement of distortion, frequency, gain, pickup and cutter performance and the control of hum.

● The acoustical quality of an audio amplifier is related to the amount of distortion prevalent in the amplifier. If conforming to true Class A operation, the output plate current waveshape of the amplifier should duplicate the waveshape of the grid voltage input. Such not being the case, the amplifier has a certain percentage of harmonic distortion which, if excessive, deteriorates the audio quality and becomes annoying to the listener.

Types of Distortion

There are three types of distortion found in an amplifier; (1) *amplitude* distortion (2) *frequency* distortion, and (3) *phase shift*. In *amplitude* distortion, the fundamental (plus harmonics) are observed in the output. *Frequency* distortion is caused by the amplifier's inability to amplify all frequencies equally. *Phase shift* is present when the amplifier has different delays for all frequencies and when the amount of distortion increases as the tube is operated outside of the linear portion of the tube characteristic curve, as shown in Fig. 28-1.

In addition to harmonic distortion, there is *intermodulation* distortion in audio amplifiers. Both are caused by nonlinearity in the amplifier. Intermodulation results in the production of frequencies equal to the sums and differences of a low and high frequency (and harmonics).

Qualitative Distortion Test

The simplest test for distortion in a class A audio-frequency amplifier stage may be made, as shown in Fig. 28-2, by applying a signal voltage of proper level to the input and inspecting the circuit for one or all of the following abnormal conditions:

(a) Presence of dc grid current.

(b) Fluctuation of the dc plate current.

(c) Fluctuation of the dc cathode voltage, if the circuit employs cathode resistor bias.

Each of these indications generally occurs in a positive direction, and each will disappear upon removal of the signal. It must be borne in mind, however, that this method is purely rudimentary in nature and serves only to detect the presence of distortion. One or two of the indications may be absent, depending upon the main cause of the trouble.

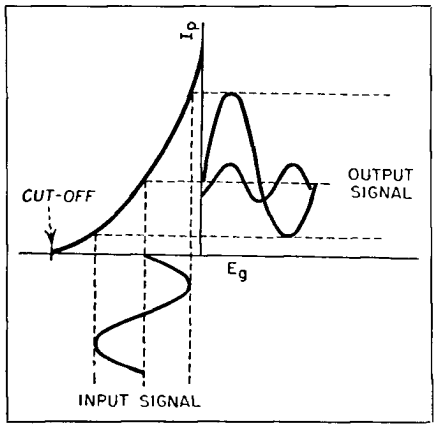

Fig. 28-1. Distortion in non-linear amplifier.

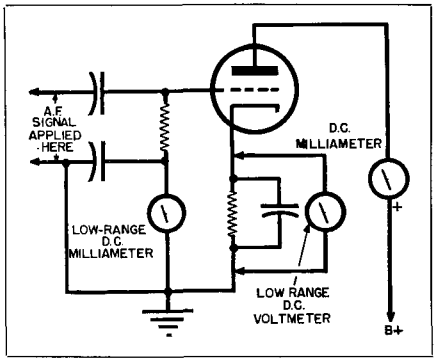

Fig. 28-2.

The three simple indications are well known and frequently used by servicemen and pa technicians having no equipment suitable for making quantitative distortion measurements, but must, in the course of routine testing, localize distortion without reference to the actual per-cent harmonic energy present.

The cathode circuit effects noted are due to fluctuations in the voltage drop across the cathode resistor, occasioned by variations in the dc component of plate current. The current indicated by the plate-circuit milliammeter is the average value of the fluctuating signal plate current, identical with the dc component, and is the current that produces the cathode resistor drop. These facts may be better comprehended when it is remembered that the fluctuating signal plate current (Fig. 28-3) is an alternating current, corresponding to the signal, superimposed upon a direct current. It will be evident from the fundamental relations of this combination that the average value of plate current, as indicated by the plate-circuit milliammeter, will be constant in the company of the alternating component under distortionless operating conditions.

Fig. 28-3 is a graphical representation of signal plate current. I_{max} is the maximum value reached by the fluctuating plate current; I_o, the zero-signal value; I_{min}, the minimum value. From these values, it may be shown that the percent second-harmonic content (often the most troublesome distortion factor) is equal to:

$$100\ \frac{I_{max}+I_{min}-2I_o}{2(I_{max}-I_{min})}$$

Quantitative methods of checking distortion are *harmonic analyses*, and are concerned with measurement of the actual amount of energy present in each separate harmonic of the signal frequency (or in the total harmonic content) and establishment of percentages with respect to the fundamental frequency. The most representative methods employed in wave analysis and the apparatus necessary thereto will be described presently.

The cathode-ray oscilloscope is notably useful in the observation of wave shapes. When the horizontal plates of the ray tube are energized by a sawtooth wave sweep-oscillator-amplifier circuit to furnish the linear time base, and a signal voltage which it is desired to observe is applied to the vertical plates through a substantially flat-response amplifier, the cathode-ray trace will be an exact reproduction of the waveform of the applied signal voltage.

An audio-frequency amplifier may be checked for distortion with the oscilloscope in the manner illustrated in Fig. 28-4. At the left is an audio oscillator

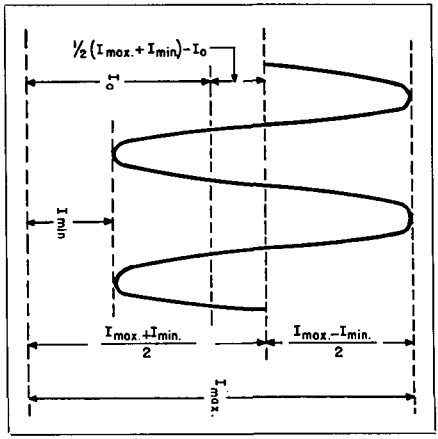

Fig. 28-3.

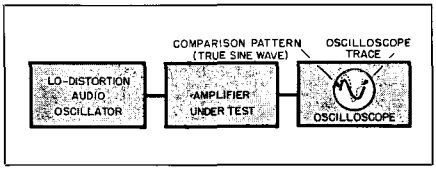

Fig. 28-4.

possessing an output voltage waveform of known purity, next is the amplifier under test, and at the right is an oscilloscope having horizontal and vertical amplifiers with substantially flat frequency responses.

It is the purpose of the oscillator to supply a signal of as pure waveform as practicable to the amplifier, and that of the oscilloscope to reproduce the wave shape of the signal after it has passed through the amplifier. In order that as little distortion as possible be introduced by the instruments themselves, the oscillator used for such a test must be of exceptionally high quality and the amplifiers in the oscilloscope must possess an excellent frequency characteristic. Likewise, the oscilloscope sweep circuit must be uncompromisingly linear in its characteristic.

If the amplifier had no distortion at all, the signal it delivered to the oscilloscope would be an exact reproduction of the input signal waveform. This is never encountered in practice, however, the most efficient amplifier arrangement being beset with the distortion characteristics of its tubes and other components.

For observations, a perfect sine wave (or, better still, a tracing of a single cycle from the test oscillator) might be inscribed on the transparent viewing screen of the oscilloscope, and signals from the amplifier matched to this pattern to discover variations from the original shape due to amplifier distortion. In making such a test, it would of course be necessary to adjust both oscilloscope amplifier gain controls in such a manner that the maximum amplitude and width of the signal trace coincided with those dimensions of the inscribed pattern.

With the low percentages encountered with most well-designed amplifying equipment, it will be difficult to estimate the percentage of harmonic content from the reproduced wave shape, in the oscilloscopic method, unless the operator makes use of the transparent screens furnished by some oscilloscope manufacturers for the purpose. These screens carry printed patterns of single cycles corresponding to the shapes obtained (variations from true sinusoidal) with various low percentages of distortion. Severe cases would result in images similar to Fig. 28-5 which is an exaggerated representation of pronounced third-harmonic content.

Distortion Measurements

This is probably the most basic measurement of performance in wide range audio equipment. It is only a short time ago that 5% total harmonic distortion was considered the criterion of high quality performance. In recent years this entire attitude has been recognized as naive, and an increasingly critical listening audience has demanded new standards of fidelity.[1]

Intermodulation distortion, another product of non-linearity, has received wide acceptance as a measurement that correlates particularly well with listening observations. Although a number of articles have appeared periodically in the literature, there is still considerable confusion in the minds of many audio engineers and technicians regarding the

[1]Goodell, J. D., "Audio Measurements." Radio-Electronic Engineering, Nov. 1948.

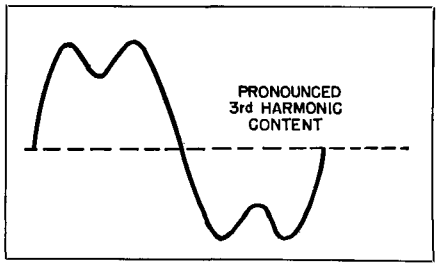

Fig. 28-5.

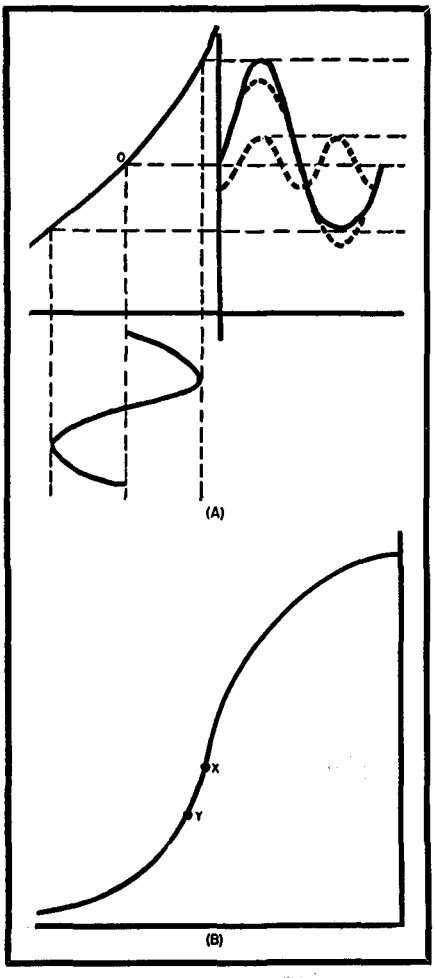

Fig. 28-6. (A) Impressing a frequency on a square law characteristic gives a distorted output consisting principally of the fundamental and second harmonic. (B) Curve is symmetrical about X, leading to odd harmonics. If operating point is moved to Y, both odd and even harmonics result.

real significance of intermodulation distortion and the application of intermodulation distortion analyzers in the industry.

Harmonic distortion and intermodulation distortion are intimately related in the sense that they stem from the same kind of non-linearity. Correlation between the two measurements is difficult for many reasons but may be accomplished on an approximate basis if the order of the harmonics is properly "weighted" in setting up the data. It is quite obvious that if harmonic distortion is eliminated, this, by definition, means elimination of non-linearity; there will be no intermodulation distortion. However, it is important to emphasize the fact that intermodulation is the more sensitive of the two measurements. When harmonic distortion has been reduced to a value that becomes difficult to observe with accuracy, appreciable percentages of intermodulation may still be measured with relative ease. Thus, the first and most obvious advantage of intermodulation distortion analysis becomes evident. It is more sensitive, and low percentages of non-linearity are reflected in larger percentages of intermodulation than harmonic distortion.

Harmonic distortion is relatively easy to represent and understand, but a few rarely mentioned phenomena are worthy of presentation. A simple case is where a frequency f_1 is applied to a device with a square law characteristic curve, as shown in Fig. 28-6A. The output resulting from lack of symmetry is obviously distorted and may be resolved into two essential components consisting of f_1 and $2f_1$. Where the characteristic curve departs from symmetry in a manner more complex than a simple square law, the terms in the output will contain additional multiples of f_1.

If a non-linear characteristic curve is symmetrical, the harmonic frequencies generated will be $3f$, $5f$, $7f$ . . . . ., consisting entirely of odd harmonics, a condition that is closely approached in push-pull amplifiers. Assymetry in a non-linear device leads to even harmonics. This, if the operating point X is chosen as an operating axis on a characteristic curve such as appears in Fig. 28-6B, so that the lower portion of the curve "mirrors" the upper portion, the output will contain only odd harmonics. In Fig. 28-6A the curve is assymetrical and even harmonics are produced. Now if the operating point in Fig. 28-6B is moved to Y, the system will produce both odd and even harmonics. This is an interesting aspect of self bias conditions where the static operating point may be se-

lected symmetrically but may shift toward assymetry under dynamic drive. It also has appreciable bearing on the difference in output harmonic content between strictly Class A and Class AB_1 conditions.

Harmonic distortion is, by definition, the production of spurious frequencies that are mathematical multiples of the fundamental. The quality, or timbre, of a musical tone varies with the number and relative intensity of the harmonics. Under certain circumstances phase relationships are an added and important factor. At any rate, the addition of harmonic multiples of the fundamental do not introduce distortion that is objectionable on the basis of dissonance. The ear recognizes added harmonics or reenforced harmonics as a change in the quality of a tone.

When two fundamental tones are applied simultaneously to a non-linear element, the output waveform contains not only the harmonics of the fundamentals but also sum and difference frequencies of the fundamentals and harmonics, as well as combination tones made up from the harmonics only. If you apply f_1 and f_2, the output will contain f_1, f_2, $f_1 - f_2$, $f_1 + f_2$, $2f_1$, $2f_2$, $2f_1 - f_2$, $2f_2 - f_1$ . . . . . ., and the total structure becomes extremely complex. The resulting sum and difference tones rarely bear any harmonic relationship to the fundamental. These sounds have no relationship to the musical notes played by the musician, and they are distinctly dissonant. It is as though a violinist were to play *Mozart* with a faint accompaniment from a string quartette playing *Schonberg*. It is not strange then that listening tests have often indicated greater correlation with intermodulation measurements than with indications of total harmonic distortion. The intensity and number of intermodulation products produced increases not only with the magnitude of the harmonics but it is also a function of their order. It was early recognized that the presence of higher order harmonics was especially objectionable, and it has now become evident that the real reason for this is the increased contribution of violently dissonant combination tones.

These circumstances have been recognized for at least ten years. It is unfortunate that the wheels of progress and standardization move so slowly that total harmonic distortion is still the most commonly published criterion. This is partly true because standards are not firmly established, and partly because intermodulation measurements are often more revealing than some manufacturers find desirable. At the present time the publication of intermodulation distortion percentages has meaning only if the instruments used are specified together with the frequencies chosen and their relative amplitudes.

The application of audio test equipment falls into two broad categories. One is the design of new equipment and the other is production testing. Intermodulation analyzers are not only invaluable as designing tools but also have great value in quality control over production.

In establishing optimum values for a circuit design, it is simple to obtain empiric answers with the intermodulation analyzer. Decade boxes are inserted for the various components, and the effect of adjustments over a wide range of values may be rapidly observed in terms of intermodulation percentage.

Theoretically it may be said that if only two fixed frequencies are used for such a procedure, it is possible to design for a dip in the intermodulation reading that is peculiar to the frequencies used. Under these circumstances design parameters might be chosen that would not produce optimum results at other frequencies. However, in connection with practical design problems in audio amplifiers, this does not appear important if suitable frequencies are used.

It is obvious that considerations other than absolutely minimum distortion must govern the final choice of values. A simple example of this involves the cathode resistor for an input stage in a voltage amplifier. If the selection is based only on minimum distortion, then the value chosen will often not provide

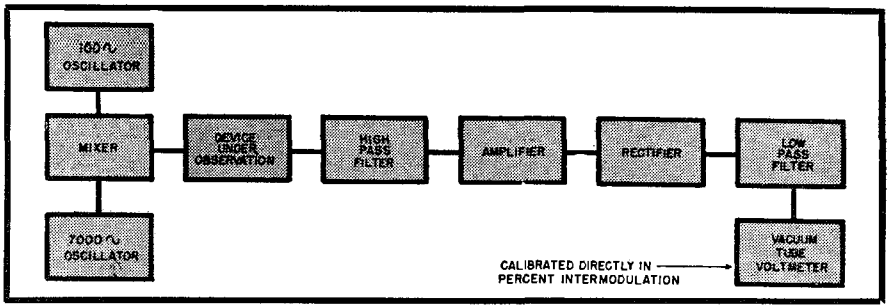

Fig. 28-7. Block diagram of a basic intermodulation meter.

sufficient bias to prevent the flow of grid current on peak signals.

For purposes of rigorous design, and particularly investigations of unconventional circuits, it is undoubtedly desirable to measure intermodulation distortion with a wide variety of applied frequencies. This may be accomplished with two oscillators and a wave analyzer. A great deal of interesting and valuable information may often be obtained by sliding two oscillators separated by only a few hundred cycles through the entire audio range and measuring the sum and difference frequencies generated in the equipment under test. This method is uniquely valuable in the high audio frequency ranges where the harmonics fall above the audio spectrum and above the range of the equipment under test so that harmonic distortion methods become impractical.

The basic form of an intermodulation distortion meter is shown in Fig. 28-7. Two frequencies are generated and mixed together. The most common frequencies used are 100 and 7000 cycles, and they are generally set in relative magnitude with a ratio of four to one, the low frequency being the largest. Obviously it is essential that the equipment under test be capable of passing the frequencies used with reasonably flat response. Where equipment is limited in range, a lower frequency than 7000 cps is used.

This complex waveform is fed to the input of the device under test, and the output of that device passes through a high pass filter. This eliminates the low frequency component together with approximately its first ten harmonics. The higher frequency may now be considered as a carrier that has been modulated. This waveform is applied to a rectifier and low pass filter, the remaining detected components being observed on a meter calibrated directly in intermodulation percentage.

A great deal of the early work on intermodulation distortion was accomplished in connection with sound motion pictures. The ASA "Standard Method of Making Intermodulation Tests on Variable-Density 16-Millimeter Sound Motion Picture Prints" approved March 19, 1946, is quoted in part as follows:

". . . Any distortion in the over-all process causes a change in high frequency amplitude in portions of the low frequency cycle. The ratio of the average variation in amplitude of the higher frequency in the reproduced wave to its original amplitude is called intermodulation. Intermodulation test results are not directly proportional to harmonic measurements, but in most cases an intermodulation figure of 10% corresponds to a harmonic reading of 2½%."

Norman Pickering reports that in his experience a reasonable rule of thumb method relates the intermodulation percentage to the sum of the percentages of each harmonic multiplied by the order of the harmonic. This estimate is based on using 100 cps and 7000 cps mixed 4 to 1. Thus, 3% second, 1.4% third, 0.5% fifth and 0.1% seventh would approximate 13.4% intermodulation. The total harmonic distortion indicated is

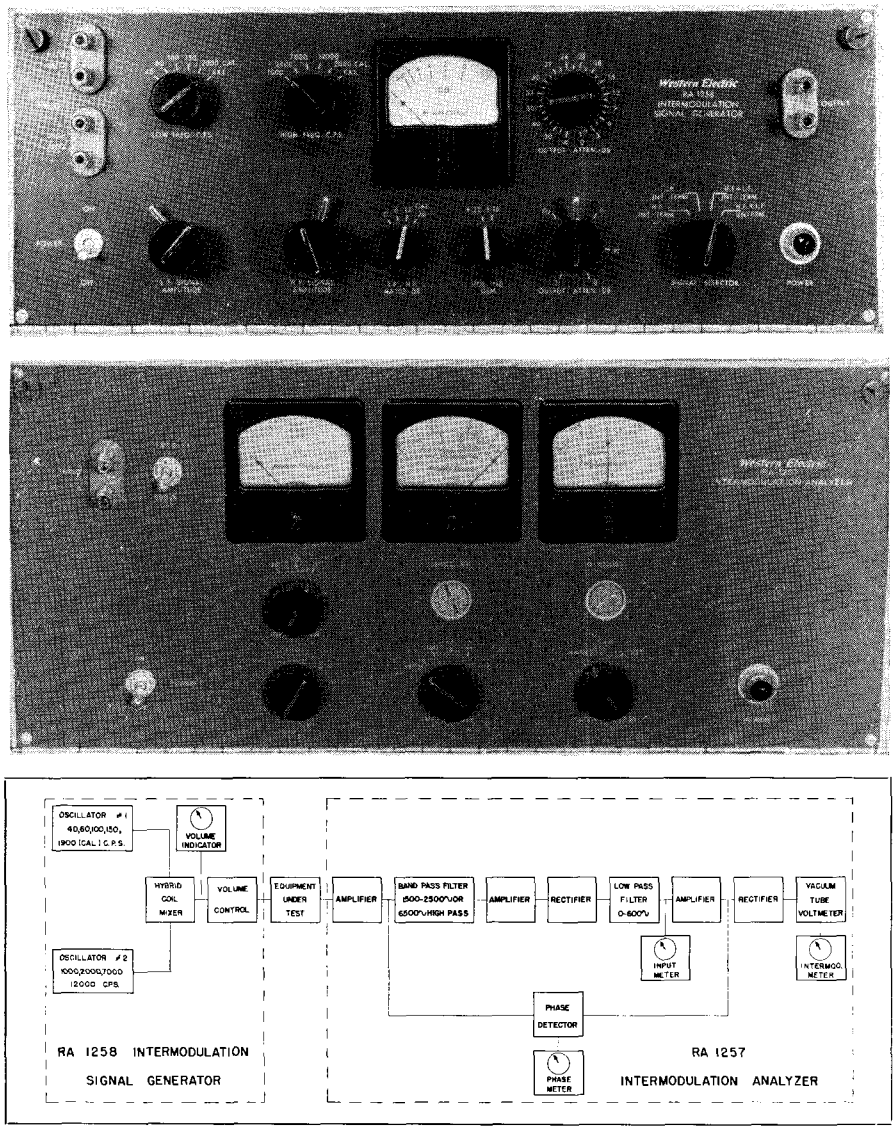

Fig. 28-8. Western Electric RA-1258 intermodulation signal generator (top), RA-1257 intermodulation analyzer (center), and block diagram of a complete setup for intermodulation measurements. (Courtesy Western Electric.)

5%, a figure that has been considered tolerable for high quality equipment. Yet experience in measurement and correlations with listening tests show that under the same conditions of measurement the intermodulation should be less than 5% for really high quality "clean" reproduction.

When used as a production test instrument for quality control, the intermodulation meter, Fig. 28-8, has many advantages. It is extremely simple to set up the equipment since it requires only an input and output connection. Power output may be standardized with a simple arrangement of resistive loads and

a high quality vacuum tube voltmeter. Once a standard limit for intermodulation percentage has been established for a specific piece of equipment at a given power output, the measurement will rapidly show whether production units are satisfactory. The important point here is that excessive hum, a marked change in frequency response or any non-linearity will change the intermodulation percentage reading. The meter will not tell the operator what is wrong with the equipment, but it will rapidly indicate that it is or is not satisfactory.

These methods of design and production testing are by no means limited in value to the manufacturer of extremely high quality equipment. It has been demonstrated that careful design with proper testing methods may make it possible to improve appreciably the performance of low priced table model radios. High quality results do not necessarily mean extremely high costs. Often careful analysis will actually show improvement through the elimination of components and simplification of circuits. The average listener will tolerate considerable modification of the original quality of tone but is very much disturbed over any extraneous added sounds. The reduction of intermodulation distortion is reflected in the cash registers of those manufacturers who have made this effort to improve their products.

It is not intended here to indicate that the design and production of high quality reproducers is strictly a matter of minimizing intermodulation distortion. Many forms of distortion and other factors are of importance. Transient response is greatly neglected, and noise reduction is certainly of paramount importance. But it is true that the customary standards involving only total harmonic distortion are entirely inadequate, and intermodulation measurements are of basic importance and value both in designing and production testing.

One approach to obtaining low values of distortion is particularly to be deplored. This concerns the all too common tendency to increase the power output unreasonably on the assumption that by so doing the distortion at power outputs actually used will be adequately low. In the first place this is fallacious, and secondly it is extremely uneconomical. Furthermore, it has led to a tendency on the part of many customers to have a greatly distorted concept of the power required for home installations. This is said with full recognition of the enormous ratio between average and peak power in music reproduction. However, 30 to 40 watts is hardly required in the average living room, and it would be very desirable if satisfactory standards of measurement were used for maximum allowable distortion at rated output power. This should either be expressed in intermodulation percentage with standardized methods of measurement, or if it must be in harmonic distortion, the percentage of each harmonic that can be reasonably measured should be included.

Intermodulation measurements have been extensively applied in studies of disc recording and considerable information obtained that would have been difficult to evaluate with other methods. Recently magnetic recording has been under intensive investigation and here, too, the intermodulation distortion analyzer has been of value.

Perhaps the most important single argument for intermodulation distortion measurements is that theoretically they should correlate well with listening tests, since they are a measure of distortion in a form that would be expected to be particularly objectionable to the listener. In practice, a number of tests run by independent investigators have revealed this as factual.

It is of considerable interest to note that the ear is capable of generating intermodulation products. A great deal of work has been done in studying this phenomenon and much of the information obtained is applicable, in general, to any non-linear system. For example, it is found that the different tones are usually of greater magnitude than the summation tones.

Newman, Stevens and Davis[2] using a wave analyzer were able to detect the presence of 66 different frequencies in the electrical response from the cochlea of a cat that had been stimulated with 700 and 1200 cps at 90 decibels above threshold. They point out that the large number of combination tones that may be present in the ear when the stimulus is limited to only two frequencies indicates that the complexity of the spectrum in the transmission system of the ear is incredible when the stimulus is orchestral.

Because of internal masking effects external distortion is less evident and less observable at very high levels of loudness than at low levels. This fact is often overlooked because of the common practice of turning up the volume to listen for distortion from a reproducing system. This is done because the tendency for any system to distort becomes greater as it is driven harder, but actually a given percentage of distortion may be detected most readily in listening observations at low levels. The reason for this is that the ear produces internal distortions that tend to mask distortion in the signal when the level is high. This applies to harmonic distortion and also to intermodulation, although there is somewhat less probability that the intermodulation distortion produced by the ear will correspond with external distortions in a manner that leads to masking. Again the tendency is for intermodulation to be more irritating.

It is often assumed that phase relationships are of negligible importance in producing objectionable distortion. That this is not true has been demonstrated. A harmonic in the signal may be reenforced or canceled by a harmonic or similar frequency generated in the structures of the ear. When two instruments play together, the harmonics from one may be in such phase relationship as to cancel harmonics in the other signal. Trimmer and Firestone[3] have shown that a change in the phase of a harmonic from a relatively low frequency fundamental may change the effective loudness of the harmonic and produce a distinct change in the timbre of the tone. The phase relationship that produces minimum stimulus also produces the greatest smoothness, while shifting the phase of the harmonic 180 degrees from this will provide maximum loudness and a definite roughness in quality.

Intermodulation distortion measurements are important and certainly such standards are more to be desired than existing total harmonic distortion representations.

Frequency Response Measurements

In the history of audio development work the characteristic used as a reference for the quality of audio equipment has changed continually. Thus, since one of the earliest problems was to obtain good low frequency response, there was a long period during which this was viewed as the most important individual factor to consider in evaluating a reproducing system. Later, when various improvements in loudspeakers and other components made reasonably good low frequency response practical, very high frequency response and complete reproduction of harmonic structures became of principle interest. Fairly recently there has been a strong swing toward emphasis on the desirability of reproducing the lowest octave down to 30 cycles per second. Realization of the problems inherent in wide range systems, where all forms of distortion become increasingly evident, has produced the concept that the last improvement to make in any system is to broaden the frequency range and that this should be done only after all other forms of distortion have

[2]Newman, E. B., Stevens, S. S. and Davis, H., "Factors in the Production of Aural Harmonics and Combination Tones." J. Acous. Soc. Amer., 1937, 9, 107-118.

[3]Trimmer J. D., and Firestone, F. A. "An Investigation of Subjective Tones by Means of the Steady Tone Phase Effect." J. Acous. Soc. Amer., 1937, 9, 23-29.

been largely eliminated. This, in a way, is the completion of a development cycle.

Any audio engineer who has been active in the industry for the last fifteen to twenty years has gone through the stage where everyone listened for bass reproduction, then the period during which a system that did not produce a good strong hiss or surface noise from even the best records was frowned upon, back to listening for the lowest pedal tones in organ records and, finally, to observing how successfully needle scratch could be eliminated. It is a long and interesting show with a continually changing criterion of performance. It has seemed as though the solution of one problem inevitably brings into focus another problem even more difficult to solve.

The most obvious method of making frequency response measurements is to apply a signal from an oscillator to the input of the amplifier and vary the input frequency while observing the output signal on a suitable voltmeter or on an oscilloscope. For observations calibrated directly in decibels a high quality vacuum tube voltmeter is probably the most desirable output indicator. For many reasons it is often more desirable and convenient to use an oscilloscope. One obvious reason is that a satisfactory oscilloscope is more likely to be available than a vacuum tube voltmeter that is sufficiently dependable with regard to maintenance of calibrations and with regard to frequency response inherent in the instrument.

When an oscilloscope is used the simplest method is to sweep the oscillator slowly through the frequency range under investigation and observe the relative amplitude at various frequencies. When the measurement involves tone controls and filters, the oscilloscope is particularly desirable because the waveform of the signal may be observed simultaneously.

Sweep Frequency Techniques

Various devices have been made available for observing the entire audio response range instantaneously on the oscilloscope. Among these are the sweep frequency records, Fig. 28-9A, and sweep frequency oscillators made by several manufacturers. In the case of at least one of the latter instruments, it is easily possible to establish calibrations in terms of decibel scales and the frequency range is presented logarithmically. All of these methods are valuable for various purposes. The sweep frequency records have their principal advantage in the fact that the output of the pickup cartridge (Fig. 28-10A and B) is included in the measurement, but on the other hand this is a disadvantage for observing the characteristics of an amplifier unless the pickup is almost perfect because it introduces a variable that must be allowed for and in any event may not be entirely dependable. However, it is the least expensive method of obtaining a sweep frequency source and presenting the effective response curve (as in Fig. 28-9B) on the oscilloscope. For purposes of convenience in making rapid comparisons and adjustments this method is to be highly recommended.

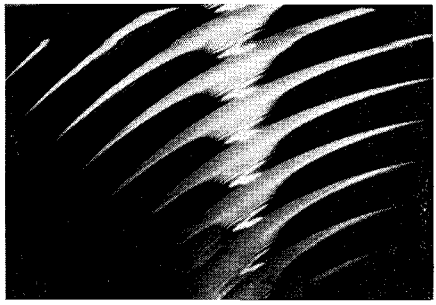

Fig. 28-9A. Clarkstan 102M microgroove audio sweep frequency record.

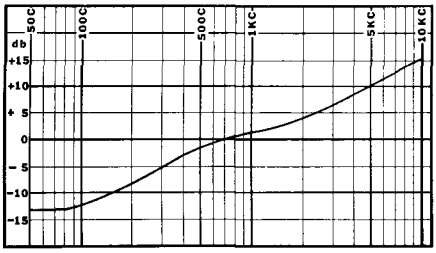

Fig. 28-9B. Frequency response of the 102M sweep frequency record.

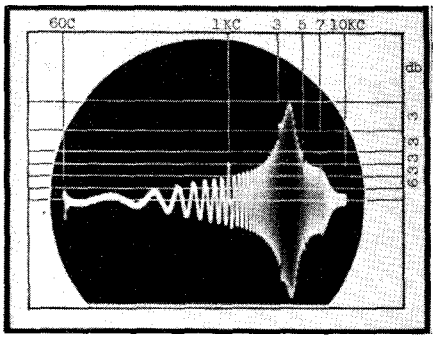

Fig. 28-10A. Unretouched oscillogroph of the response of the No. 253 offset stylus when used with the RV 20 1 pickup. No equalization. (This oscillogram was taken using the Clarkstan No. 1000A Audio Sweep Frequency Record.)

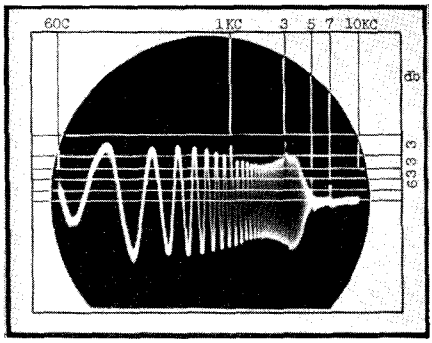

Fig. 28-10B. The oscilloscopic response of the No. 253 offset stylus and No. 201 pickup with complete equalization. (This oscillogram was taken using the Clarkstan No. 1000A Audio Sweep Frequency Record.)

Although the sweep frequency records and some of the sweep frequency oscillators provide marker pips for determining the specific location of various frequencies as observed on the oscilloscope, the accuracy with which this may be determined visually leaves much to be desired. In one of the instruments available sharp filters are provided with selective arrangements that make it possible to find a specific frequency on the curve quite accurately.

An effective and simple manner of observation of frequency response characteristics is very much to be desired because it facilitates design work, and speeds up production testing, contributing to lower costs and superior results.

There is one method of observing frequency characteristics that is believed not to have been previously described. This method has certain advantages over others in simplicity of observation and the accuracy with which the observation may be made, eliminating the possibility of error that may occur because the input signal is not ordinarily observed simultaneously with the output signal.

The method of frequency response observation to be described depends to some degree for its advantages on the fact that over the entire frequency response range there will almost inevitably be a certain amount of observable phase shift, even in a single stage of voltage amplification.

The effects involved and the patterns observed are by no means new, but the interpretation is applied to frequency response observations instead of the customary frequency determination or relative phase measurements.

Phase Shift Technique

The procedure is to apply, simultaneously, the output of an oscillator to the horizontal axis of an oscilloscope and the input of the amplifier under test.[8] The output of the amplifier is then applied to the vertical axis of the oscilloscope. If the input and output levels of the signal as well as the input controls to the oscilloscope are properly adjusted, one of the familiar *Lissajous* patterns shown in Fig. 28-11 will be observed. If at the frequency used there is no relative phase shift between the amplifier input and output, the pattern observed will be a straight line. At some frequency in the audio range this will be found to be the case, although the frequency for zero relative phase shift may be anywhere in the range. Having found a frequency at which this is the case, the amplitude of the two inputs to the scope should be adjusted to provide equal signal strengths to the plates so that the angle of this line

[8]Goodell, J. D., "Audio Measurements," Radio-Electronic Engineering, Jan., 1949.

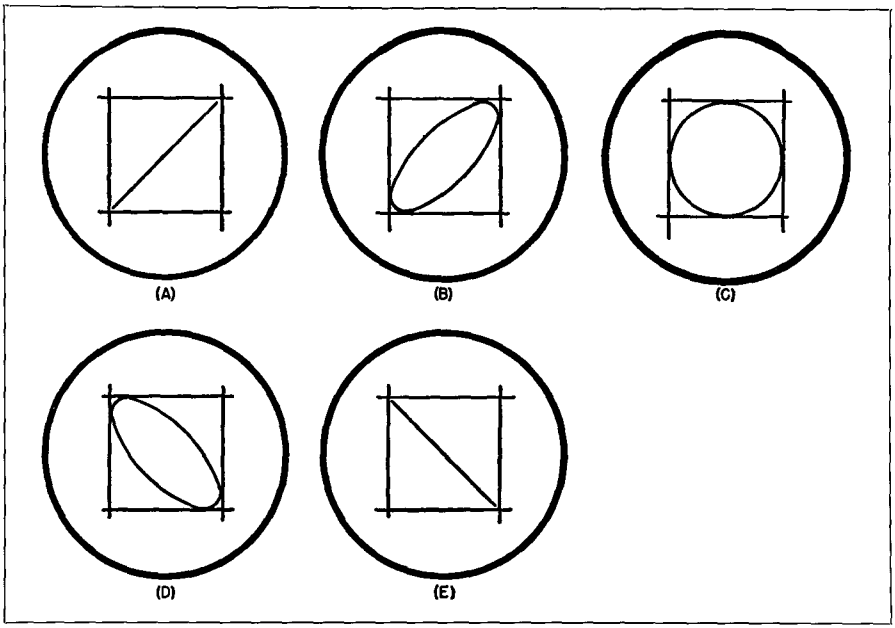

Fig. 28-11. Phase shift patterns used in frequency response observations described in text.

will represent the diagonal of a square, as shown in Fig. 28-11A or 28-11E.

Now, if the frequency is varied above and below this zero relative phase shift point, it will be observed that the shift in phase through the amplifier circuits will progress smoothly (in most amplifiers) so that the pattern gradually opens up. If the zero relative phase shift frequency is in the range above approximately 400 cps, this opening up will usually occur above and below the selected frequency. If the frequency response of the amplifier is perfectly flat, the pattern will progress through an ellipse to a perfect circle. If the perfect circle condition is reached before coming to the limits of the section of the spectrum under observation, it will then progress to an elliptical pattern again and back to a straight line representing the opposite diagonal from the one at which it started. This is shown in Fig. 28-11A through 28-11E.

In other words, if the frequency response of both the oscillator and the amplifier is perfectly flat, then there will always be a point on the pattern that is in contact with each side of the square (of which the initial pattern represents a diagonal). If the amplifier response falls off, then the vertical height of the pattern will decrease proportionately and the points that would normally be in contact with the top and bottom sides will recede toward the center. If the oscillator response falls off but the amplifier is flat, then both the vertical and horizontal dimensions of the pattern will decrease proportionately and all points that would otherwise be in contact with the sides of the square will recede toward the center.

Conversely, if the frequency response of the amplifier has a rising characteristic then the pattern will grow in a vertical direction, and if the oscillator has a rising characteristic the pattern will expand both vertically and horizontally. If the fault is with the oscillator, the axis of the elliptical patterns will not rotate. If the amplifier characteristic rises, the axis will rotate toward the vertical; if the characteristic tends to fall off, the axis will rotate toward the horizontal, as shown in Fig. 28-12.

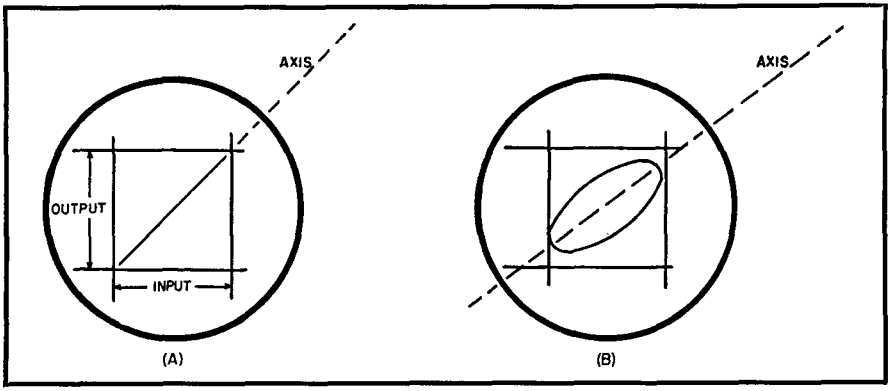

Fig. 28-12. Phase shift pattern—output vs. input. In (B) input is constant and output is attenuated. Note that axis rotates towards the horizontal.

The obvious advantage of this method is the ability to observe the oscillator response simultaneously with the response of the amplifier under test and immediately to ascribe a fault to the input signal or to the amplifier. When an effort is being made to obtain very accurate response characteristics, and particularly where this is being done in a production test set-up, it is well worthwhile to rule out (or in) the characteristics of the oscillator. Most oscillators are subject to an appreciable degree of change in their characteristics over a period of time. Rarely is all the test equipment used in production setups or on designing benches checked as often as it should be to insure protection against incorrect observations and conclusions. A system that eliminates this source of confusion has definite advantages.

With this method it is not possible to observe the waveform with any degree of accuracy, although serious distortion will show up in the lack of symmetry in the pattern. A flat-topped waveform from the amplifier will appear somewhat as shown in Fig. 28-13A. Various types of distortion will produce other patterns. (Fig. 28-13.)

In final production testing of amplifiers it is sometimes important to adjust the tone controls so that flat response will be obtained when the indicators point straight up rather than in the mechanical center of rotation where the controls are continuously variable. This may be accomplished quickly with the phase shift patterns. Having once established the frequency for zero effective phase shift in a particular amplifier design, the tone controls may be adjusted

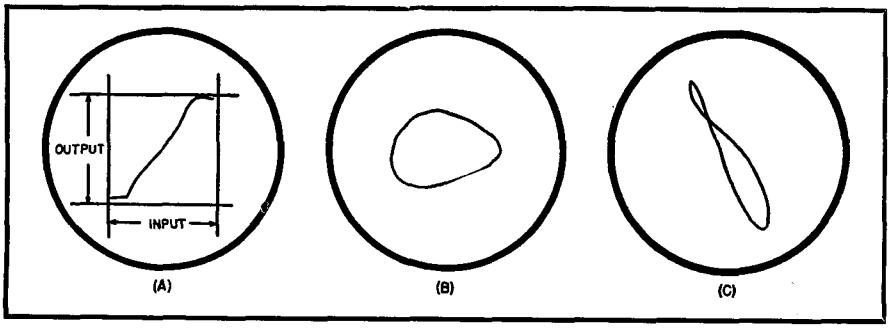

Fig. 28-13. Phase shift patterns—output vs. input. (A) Flat top distortion in output. (B) and (C) Various forms of non-linear distortion.

rapidly in production testing very close to "flat." This is done by setting the reference frequency on the oscillator and adjusting the controls until the pattern is a straight line. Any deviation from center setting will result in an opening up of the pattern. This may be accomplished by rotating the mechanical fastening of the potentiometers or by rotating the setting of the knobs if the shafts are not designed with a fixed flat contact point for the adjusting screw. A quick slide through the frequency range will then make a fine adjustment possible with speed and accuracy.

If it is found impossible to adjust the tone controls to achieve a straight line at the frequency normally correct for a specific amplifier design, it is a quick indication that the inherent response of the amplifier is faulty. It will be noted that any adjustment of the tone controls from the flat position, whether it be in a boosting or attenuating direction, will result in shifting the frequency at which the straight line pattern is obtained. High frequency attenuation, for example, will tend to move this frequency in a downward direction while increasing the high frequency response will move it in an upward direction in any specific amplifier.

In observing the phase shift across a single stage of voltage amplification and making the measurement directly between the grid and plate, it will usually be found that the frequency for zero effective phase shift is close to zero frequency. If the stage is reasonably flat in frequency response, the pattern will open very slowly and will not become a complete circle even at the limits of the audio range around 20,000 cps.

Phase shift and frequency response are intimately related and phase shift is an indication of attenuation. This fact may be applied with validity only to a simple system such as a single stage of voltage amplification. With complete amplifiers the end result in terms of frequency is produced by the cumulative characteristics of all the elements in the system. One stage may have a drooping characteristic while a subsequent stage rises in an almost perfectly complementary manner. The result may be an almost perfect over-all frequency response; yet a phase shift of 0.014° per cycle of frequency would be typical between approximately 700 and 14,000 cps. It is not impossible to design a single or even a two stage amplifier with practically zero attenuation, and thus zero phase shift. It is rarely encountered in audio circuits. Phase shift in audio work with respect to listening observations is in much the same category as Vitamin E with respect to human nutrition. Its importance has not been firmly established. However, considerable work has been done to determine its value and there is considerable accumulated evidence of a practical as well as a theoretical nature to show that it should not be completely overlooked.

If phase shift is linear in any system with respect to frequency expressed in degrees per cycle of frequency, there will be no waveform distortion. The reason, of course, is that such a condition represents a constant time delay for all frequencies. As a simple example with arbitrary and not necessarily practical figures, a specific system might be considered that has a phase shift of 0.18 degrees per cycle of frequency. Thus, 500 cycles per second would be shifted 90 degrees; 1000 cycles, 180 degrees and 2000 cycles, 360 degrees. If all of these frequencies were considered to have started out from the point of origin in time in a positive direction from the reference line, then after the phase shift took place their relationship with respect to time would not have changed. This is indicated in Fig. 28-14. The resultant complex wave form would be unchanged. No phase distortion would be said to have taken place.

If, on the other hand, there is a definite time delay resulting from nonlinear relationships between phase shift and frequency, the shape of the waveform will be changed. With conditions where the signal passes through a large number of amplifiers, each with an appreciable phase distortion characteristic, the results are obviously undesirable.

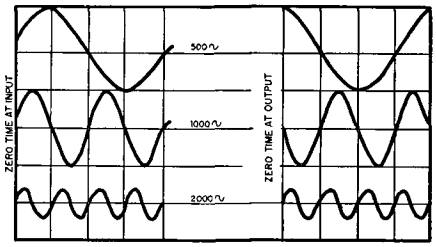

Fig. 28-14. Input and output phase relationships with theoretical linear phase shift of 0.18° per cycle. Note that time delay is constant at all frequencies—hence resultant waveform will not be changed.

With the amount of phase distortion ordinarily encountered in reasonably high quality audio amplifiers, the importance of the effect upon reproduced sound has not been definitely determined. The statement that phase shift is totally unimportant is based on the assumption that the ear rigorously follows Ohm's acoustical law, that it acts as a perfect wave analyzer and has no appreciable inherent distortion. Such, of course, is far from the truth.

It is obvious that if two signals of the same frequency are present, the resultant amplitude will be a function of their respective amplitudes and also of their phase relationship. The effect of feeding the same signal to two loudspeakers placed side by side but connected in opposite phase where the result of even a strong signal is almost complete silence is quite common. The same effect is observable in certain locations in rooms with public address systems where cancellation takes place, and also in many theatres. The principal reason for using an enclosure around a loudspeaker is to prevent the back wave from canceling the front wave in regions where the two may be exactly out of phase. Clearly this same principle applied for two frequencies in a complex signal and their phase relationship will strongly affect the observed resultant.

The same theory applies to many conditions where a difference in phase between frequencies that are not exactly the same will affect the resultant amplitude. Finally, the ear generates harmonics in its own non-linear structures. If a complex waveform consisting of a fundamental frequency and a number of harmonics is applied to the ear, the ear will generate harmonic structures from the fundamental and from each of the harmonics, provided that the signal level is adequate. If the harmonics in the exterior signal are in phase with the aural harmonics, the total harmonic structure observed by the central nervous system will be greater in amplitude than if the opposite condition exists. This has been demonstrated experimentally many times.

No one will debate the fact that in listening to live music or reproduced music the location of the observer in the room will affect the signal he hears to a very great extent, and that this is at least to some degree a result of phase shifts from direct and reflected waveforms.

If all this is true, it does not seem reasonable that phase shifts in a recording and reproducing system should be completely neglected. In degenerative feedback amplifier circuits it is necessary to maintain a minimum phase shift over extremely wide frequency response ranges where large amounts of feedback (such as 30 db.) are used. This may be a second order factor in the desirable listening results achieved with such designs.

In connection with the phase shift described, it is worthwhile to mention the simple method of approximating the

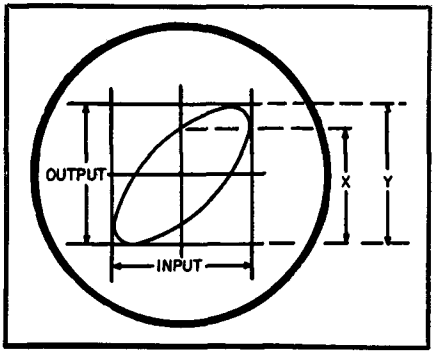

Fig. 28-15. Simple method of determining approximate phase shift by measurement of pattern—$\sin\phi = X/Y$.

amount of phase shift by physical measurement of the patterns. This is indicated in Fig. 28-15 where the sine of the angle is equal to the ratio of the dimension X to the dimension Y. In any form of these patterns X is the distance from the center to the point at which the pattern crosses the vertical line, and Y is the distance from the horizontal reference to the greatest vertical amplitude.

Frequency measurements, of course, are important in connection with all the components of a reproducing system. When response curves are constructed on the basis of sound pressure measurements for loudspeakers, they are usually so far from linear that the technician accustomed to observing amplifier response characteristics is often amazed that they represent high quality units. It is fortunate that the industry is progressing toward standardization of methods for making response curves on loudspeakers and that an understanding of their interpretation on a comparison basis is becoming more widespread.

Frequency records are often used to attempt to observe with listening tests the over-all response of a system from pickup to the ear. In practice there are many dangers inherent in this method, and conclusions drawn from the results will not always correspond to a judgment made in terms of straightforward music reproduction.

[4]LeBel, C. J. "Psycho-Acoustical Aspects of Listener Preference Tests," Audio Engineering, August, 1947.

[5]Roys, H. E., "Intermodulation Distortion Analysis as Applied to Disk Recording and Reproducing Equipment." Proc. I.R.E., October, 1947.

[6]Hilliard, J. K. "Distortion Tests by the Intermodulation Method," Proc. I.R.E., December, 1941.

[7]Frayne, J. G., and Scoville, R. R., "Analysis and Measurements of Distortion in Variable-density Recording." Jour. Soc. Mot. Pict. Eng., June, 1939.

Frequency Bridges

Certain bridge circuits, notably the Wien bridge (see Fig. 28-16) can be used for the identification of frequencies in the audio-frequency spectrum. If an alternating voltage is delivered to the bridge circuit, the latter may be adjusted for a null at that particular signal frequency. The null point would not hold for the same voltage of another frequency. Thus the adjustable element of the bridge might be calibrated to read directly in cycles-per-second.

The Wien bridge in its most useful form for this purpose would have its constants so chosen that the ratio arm R_2 is twice the ohmic value of R_1, the condensers C_1 and C_2 are equal in capacitance, and the two simultaneously adjustable resistance legs R_3 and R_4, are at all positions equal. Under these conditions, the frequency of the impressed voltage at null would be equal to:

$$f = 1/2\pi RC$$

Where:

f is the frequency in cycles-per-second,
R is the resistance of R_3 or R_4 in ohms,
C is the capacitance of C_1 or C_2 in farads.

Since the bridge may be balanced for only one frequency at a time, it would appear that any residual voltage indicated by the vacuum-tube voltmeter M, at null would be due to some other frequency or frequencies (such as harmonics of the fundamental). This harmonic voltage would be due to the total of harmonic voltages present. As such, the bridge might be connected, as shown in Fig. 28-16, to the output circuit of an audio-frequency amplifier which is passing a signal from a high-quality audio oscillator.

While the device might be used as shown as such a harmonic totalizer, the percentage total harmonic content with respect to the readings of the meter before and after null would not be reliable, nor would its error be uniform for all frequencies. These facts are due to the peculiar inability of the bridge to attenuate various harmonics equally.

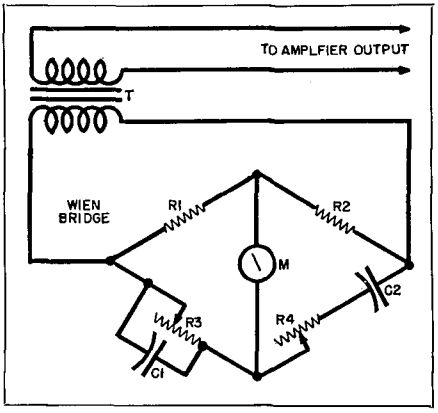

Fig. 28-16.

Another popular type of bridge harmonic totalizer is shown in Fig. 28-17. Here, three legs of the bridge, R_2, R_3, and R_4, contain pure resistance, while the fourth leg contains the shielded parallel resonant circuit, LC, which is resonant at the test frequency. The transformer T, like the one shown in the bridge previously described, must have an excellent frequency characteristic.

At resonant frequency of LC, the inductive reactance of the tuned circuit equals the capacitive reactance, the former is cancelled by the latter, and the bridge balances as if all four legs were pure resistance. Any voltage applied by the circuit to the vacuum-tube voltmeter is then due to harmonics of the test frequency (and it is assumed that these harmonics have been delivered to the bridge by the amplifier under measurement).

In operation, the double-pole, double-throw switch, S, is thrown to position 2 and the bridge balanced with the assistance of the vacuum-tube voltmeter, M, as a null indicator. The reading at null (due to harmonics) is recorded. The switch is then thrown to position 1 and R_5 is adjusted until the meter gives the same reading (as before at null). The following calculation may be performed to determine the percent of total harmonics from this operation:

$$\%H = 100R_5/(R_4 + R_5)$$

A dial indicator attached to the potentiometer R_5 may be calibrated directly in these percentages.

Square Wave Testing

Checking the response of an amplifier to a square-wave signal provides one of the fastest and easiest methods for testing frequency response, phase shift, transient response and similar characteristics.[9]

A close approach to a square wave may be obtained by "clipping" the peaks of a sine-wave signal as illustrated in Fig. 28-18. A number of clipper circuits

[9]Garner, L. E., "Wide Frequency Range Square-Wave Clipper," Radio & Television News, Mar. 1950.

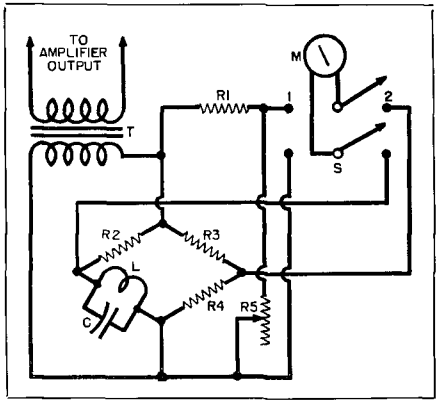

Fig. 28-17.

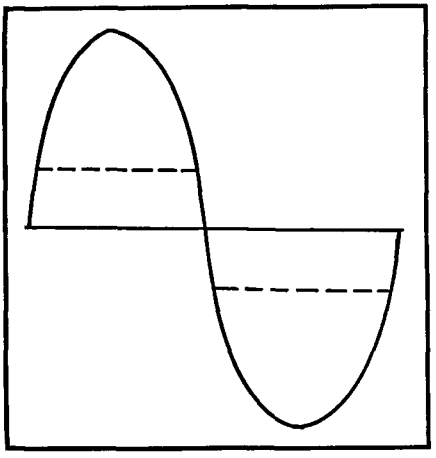

Fig. 28-18. Principle of clipper circuit. Peaks of sine wave are clipped to get square wave.

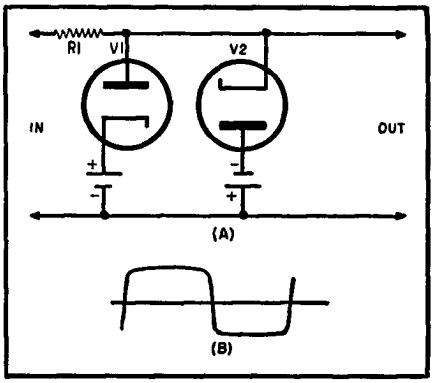

Fig. 28-19. Diagram of square-wave clipper. Its waveshape is not as sharp as that of the final circuit shown in Fig. 28-20.

may be used to do this, the most popular being illustrated in Fig. 28-19A.

In operation, whenever the voltage of the input sine-wave signal exceeds the dc voltage applied to the diodes by means of small cells, the diodes conduct. Diode V_1 conducts on positive peaks and diode V_2 conducts on negative peaks. When either diode conducts, it acts as a short circuit and the input signal is dropped across series resistor R_1.

The effectiveness of clipping in this manner depends on the combined value of the diode resistance (when conducting) and the battery resistance in comparison with the value of R_1. If R_1 is very large compared to the combined diode and battery resistance, reasonably good clipping is obtained.

This circuit, though widely used, does not give a really close approach to a "perfect" square wave, and hence is not suitable where more exacting tests are required. First, regardless of how large R_1 is made, the diode and battery still have some resistance and a small voltage will appear across them. This voltage will vary with the changing resistance of the diode. Thus, a "rounded" square wave is obtained, with both trailing and leading edges rounded somewhat and with a slight bow instead of a perfectly flat top, as illustrated in Fig. 28-19B.

In addition to this disadvantage, the circuit also has a limited frequency range, for as R_1 is made larger, distributed capacities become important and limit the frequency at which even a close approach to a square wave can be obtained.

By using a different arrangement, the clipper circuit shown in Fig. 28-20A can be obtained. This circuit, when properly driven, will provide almost perfect square waves, with sharp corners and a flat top, over an extremely wide frequency range.

In operation, diodes V_1 and V_2 are normally conducting and thus act as resistors, passing any signal applied to the input. However, when the peak of the input signal exceeds the battery voltage, then one of the diodes stops conducting and acts as an open circuit, preventing further passage of the signal and effectively clipping the peaks.

On negative peaks, the plate of V_1 is made negative with respect to its cathode and hence it stops conducting and acts to open the circuit. On positive peaks, diode V_1 continues to conduct, but the cathode of V_2 is made positive with respect to its plate and this tube acts to open the circuit.

Application

When testing either a single stage or a complete amplifier, the equipment is arranged as shown in block diagram form in Fig. 28-22. A good oscilloscope and a sine-wave signal source are re-

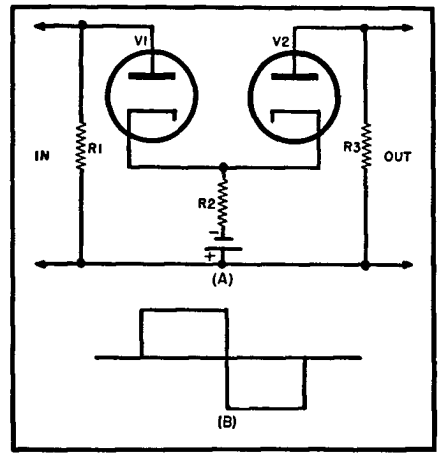

Fig. 28-20. Clipper circuit. See text for values of components.

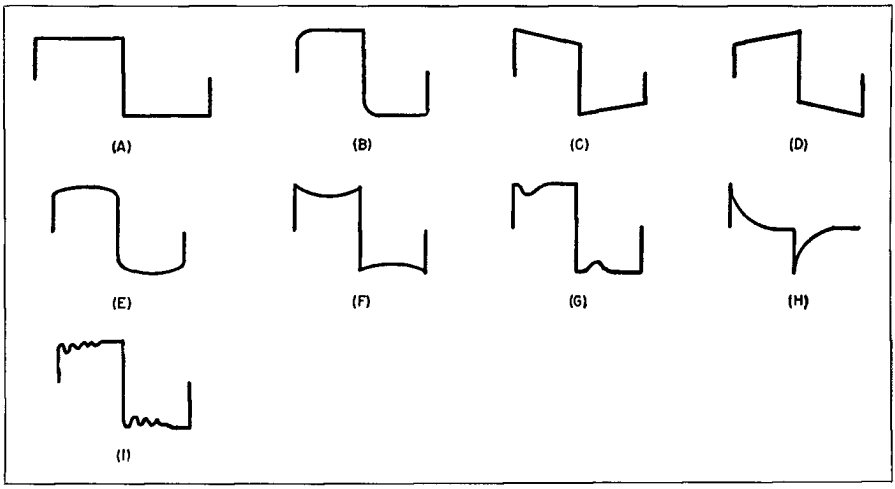

Fig. 28-21. In square-wave testing the output waveshape is noted and compared with the square-wave input. If any deviation occurs, it indicates some form of trouble in the unit under test. Each of the above waveshapes indicates a particular type of defect. See text for a complete analysis of the circuit faults represented.

quired in addition to the clipper. The square-wave signal at the output of the clipper is first observed on the oscilloscope. Next, the output signal from the amplifier is observed and any departures from a perfect square wave noted.

It is best to adjust the horizontal sweep of the oscilloscope so that at least two complete cycles can be observed on the screen.

An input square wave and distorted square waves showing the effect of different amplifier characteristics are shown in Fig. 28-21. The perfect input square wave is shown in Fig. 28-21A.

A drop-off in high frequency response in the amplifier causes "rounding" of the leading edges of the square-wave signal as shown in Fig. 28-21B. Usually, the rounding off will be easily noticeable if there is a decided drop in amplifier gain

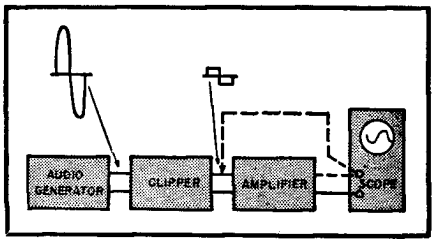

Fig. 28-22. Test setup used for checking audio amplifiers.

by the tenth harmonic (or less) of the square-wave fundamental frequency. Thus, if a 1000 cps square wave is passed without appreciable rounding, you can be reasonably sure that the amplifier is "flat" to 10 kc. But this gives no indication of the response below the fundamental frequency of the square wave. To do this, a lower frequency square wave is required.

Since the clipper, when properly driven, can easily supply a 20 kc. square wave, it can be used for checking the response of wide-band amplifiers (up to 200,000 cps) as well as audio amplifiers.

If there is phase shift in the amplifier so that phase leads at low frequencies, the top of the square wave is tilted as shown in Fig. 28-21C. If phase lags, the tilt is as shown in Fig. 28-21D. The amount of "tilt" depends on the degree of phase shift.

The effect of accentuated gain at low frequencies is shown in Fig. 28-21E, while the effect of a drop in gain is shown in Fig. 28-21F. The drop in gain is at the fundamental frequency of the square wave. It is assumed that there is no phase shift in both cases.

Low frequency phase shift and response tests are usually made with a 20 to 60 cps square wave, the exact fre-

quency depending on the low frequency response of the amplifier being checked.

A dip at one point in the square wave, as illustrated in Fig. 28-21G may be caused by a drop in amplifier gain over a narrow range of frequencies (or at one frequency). If the drop in gain occurs at the square-wave frequency, then the dip spreads over the entire half cycle and we get the condition of Fig. 28-21F.

Too low a value of coupling condenser, too small a value grid resistor, or a partially open coupling condenser may cause differentiation of the square wave, resulting in a pulsed output signal as shown in Fig. 28-21H.

The transient response of the amplifier may be checked by noting if there is any overshoot or damped oscillations following the leading edge of a high frequency square wave as shown in Fig. 28-21I. A damped oscillation of this type may be caused by distributed capacities and lead inductances resonating at a low frequency, causing a sharp rise in amplifier gain at that point. This condition may also be caused by an undamped peaking coil in a video or scope amplifier.

The frequency at which the circuit resonates (and at which the peak in response occurs) can be determined by spreading the observed signal on the oscilloscope screen until the individual "cycles" in the damped oscillation can be counted. The number of individual cycles, multiplied by square-wave fundamental frequency, gives the approximate frequency at which the peak occurs. Although the value determined in this manner is not absolutely accurate, it is sufficient for all practical work.

In general, the low frequency characteristics of an amplifier are checked by applying a square-wave signal with a frequency near the lower limit of the amplifier. If the flat top of the square wave is tilted, phase shift occurs. If the leading edge is gradually rounded, there is a gradual falling off in amplifier gain at higher frequencies. If there is a peak or a dip in the signal there is either a peak or a drop (respectively) in amplifier gain at some particular frequency. The frequency at which the peak or drop occurs can be determined approximately by the ratio of the time of the peak or dip with respect to the time for the complete cycle of the square wave.

The high frequency response characteristics of an amplifier are checked in the same manner. For high frequencies, however, in addition to the above mentioned characteristics, transient response can also be checked.

For pa amplifiers, square waves at frequencies of 60 cps and 1000 cps are normally sufficient. For high fidelity audio amplifiers, frequencies of 20 cps, 200 cps and 1500 cps should be employed. Finally, for wide-band amplifiers, additional square waves with frequencies about a decade apart should be used, the highest frequency being about one-tenth the upper frequency limit of the amplifier.

In all cases, however, make sure the scope has a flat enough response to enable you to observe a square wave at the frequency used.

Routine Tests for Audio Amplifiers

Sound systems have found such wide application in recent years that the maintenance and repair of this equipment has become a distinct occupation.

Modern amplifiers approximate radio receivers in the number of their circuits and the increasing difficulty with which faulty operation is diagnosed and localized in them. Since in order to be profitable an amplifier test must be performed as quickly and completely as possible and the diagnosis must be precise, the test must be made according to a well-organized, time-saving plan.

A procedure for the routine inspection of audio amplifiers in maintenance and trouble shooting is as follows: Some of the methods included have been borrowed from laboratory practice, others are common to radio servicing. The steps given below have been selected to disclose most amplifier troubles. The arrangement of tests and their sequence are believed logical for complete diagnosis of amplifier performance, whether trouble is present or not.

By sufficient rehearsal of the operations, the Audio Technician should acquire considerable dexterity in the speedy analysis of amplifier operation. The data he collects from the series of tests should enable him to recondition an amplifier completely or appraise its performance.

Following are the recommended tests in the order in which they should be made:

1. Tube Checking
2. AF Signal Tracing
3. Static Voltage and Current Measurements
4. Gain Measurement
5. Frequency Response Check
6. Distortion Check
7. Check for Feedback
8. Impedance Measurement
9. Power Output Measurement
10. Hum and Noise Level Checks

The tube check (1) is preferably one which gives an indication of some dynamic characteristic (such as transconductance or *amplification* factor), rather than emission. AF signal tracing (2) consists of following the progress of an audio signal through the various amplifier stages, noting amplification, reduction or distortion of the signal in the stages. The static voltages and currents (3) are measured at appropriate circuit points, generally directly at the tube socket terminals. A rectifier-type ac voltmeter is satisfactory for indicating the heater voltages, but an *electronic dc voltmeter* (VTVM) or potentiometer-type indicator is mandatory for plate and screen voltages. Most of the high-resistance non-electronic meters are totally useless for measurements in resistance-coupled amplifier circuits. The operations numbered from 4 to 10 in the list will now be discussed in detail.

Gain

Gain measurements reveal the actual amplification obtained in the entire amplifier or in any of its stages. Gain measurements are quantitative. Both *voltage gain* and *power gain* are measurable and are of importance to sound engineers. However, voltage gain is of commonest concern and is generally implied by use of the single word, *gain.*

Both voltage and power gain are determined by the increase in output signal over the input signal. In procedure, the ratio of output voltage or power to input voltage or power is determined by measurement. There is no name unit for gain, this characteristic being expressed simply as the quotient indicated by the voltage or power ratio. For example, a gain of 10 (or 10 times) corresponds to the ratio 10 : 1, and indicates the amount of amplification in *any* case where the output voltage or power is ten times the input value. Since this is true regardless of the actual magnitudes of the input and output signals, gain is seen to be a relative characteristic.

To determine the overall voltage gain of an amplifier, an af voltage is applied to the input terminals of the amplifier and successive readings taken of the voltage impressed across the input circuit and the output voltage developed across a terminating resistance or impedance. Voltage measurements are made with a vacuum-tube voltmeter in a circuit similar to those of Figs. 28-23 and 28-24. The ratio of the two voltages is the overall gain. However, most amplifier manufacturers state overall gain as the number of decibels corresponding to this ratio.

It is advisable to make overall gain measurements with all volume controls set at maximum volume and to adjust

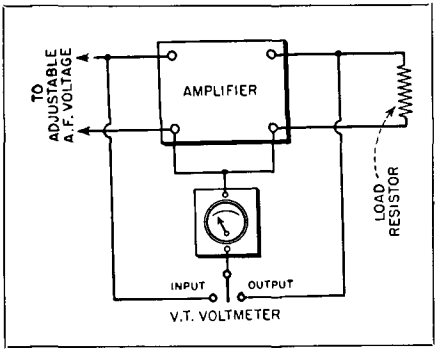

Fig. 28-23.

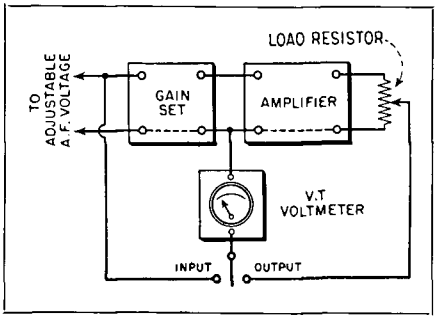

Fig. 28-24.

the voltage of the input signal to deliver an output voltage corresponding to the rated amplifier output power. The proper output voltage may be determined from the equation:

(1) $$E = \sqrt{PR}$$

where E is the required e.m.f. (volts)
P the rated undistorted output power (watts)
R the load resistance or impedance (ohms)

An alternative method of measuring overall gain is shown in Fig. 28-24. The source of audio-frequency test voltage is properly terminated and then connected to the amplifier input through a standard *gain set*. The amplifier is suitably terminated by a non-inductive load resistor of appropriate wattage, and a vacuum-tube voltmeter is arranged to give successive indications of input and output voltages.

The tap on the load resistor enables the operator to select, for output indication, an af voltage within the full scale range of the vacuum-tube voltmeter, while full power output is supplied to the load. This is an advantage since the amplifier will be operated at full output during the measurements without injuring the meter.

With the voltmeter in the input position, the af voltage is adjusted to a value necessary to give full power output by means of the gain control in the oscillator. The meter is then switched to the output circuit and the gain set adjusted to restore the meter reading to this reference level. The gain may then be read directly from the dials of the gain set.

Tests for Feedback

Regenerative feedback is often quite perplexing to the amplifier technician since it may not cause the amplifier to oscillate at an audible frequency, but nevertheless is present in sufficient quantity to cause serious distortion.

When regeneration is suspected, each stage should be examined for its presence by means of grid current or cathode voltage measurements. The presence of grid current in any class of amplifier receiving no input signal is a certain indication of feedback.

Each stage should be examined separately, progressing from input to output circuits of the amplifier. The presence of feedback over several stages, rather than in a single one, may be verified by opening the connection between a stage in which abnormal no-excitation dc voltages or currents have been discovered in the stages immediately preceding and following. Currents or voltages should fall to normal values when the contributing stages are thus uncoupled. Likewise, abnormal currents and voltages will not be found in the isolated stages.

Audible feedback in a previously efficient amplifier generally arises in one stage. In developmental units, it is most often due to unwise layout. In the first case, the af voltage generated is passed along to each succeeding stage and into the loudspeaker. The offending stage is readily located if, in the absence of an input signal the output of each stage—from input to output ends of the amplifier—is inspected with a vacuum-tube voltmeter or sensitive headphones. The first stage delivering a howl to the headphones or deflecting the meter is the one in which audible feedback orginates.

Determination of Impedance

An investigation of the impedance of transformer windings logically will follow the discovery of distortion, although the impedance of an output transformer

will be under surveillance when the loudspeaker signal is low. It may also be desirable to check an unknown transformer for secondary impedance when matching speakers to a strange amplifier.

Fig. 28-25 shows a simple method of measuring the impedance of a transformer winding. The unused winding is connected to its usual circuit points or to an equivalent resistor, R_L. The winding under test is connected in series with a variable resistor R_t and a source of 400 cycle controllable af voltage. R_t is a wire-wound rheostat or a laboratory decade box. A vacuum-tube voltmeter is arranged with a s.p.d.t. switch to measure successively the af voltage drop across the resistor and winding.

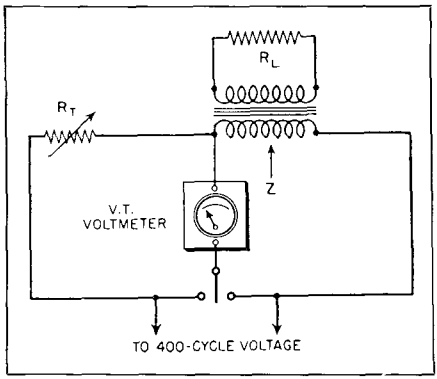

Fig. 28-25.

In making the test, R_t is adjusted until its voltage drop is identical with that of the transformer winding. Its resistance at this setting then equals the impedance of the winding. The input voltage level is adjusted for a good, readable deflection of the meter.

The value of R_t at "balance" may be determined by means of a good ohmmeter or, for more accurate purposes, by means of a resistance bridge.

The impedance of a transformer winding (with the other winding appropriately loaded) might be found also by measuring its inductance with a suitable bridge for the purpose, measuring its resistance, and calculating from the equation:

$$Z = \sqrt{R^2 + (2\pi fL)^2}$$

Where Z is the required impedance (ohms)

R the resistance (ohms)

f the frequency of the bridge voltage (cps)

L the measured inductance (henries)

If the turns ratio of a transformer has been determined previously, the impedance ratio or the separate impedances may be found with the aid of the following formulae:

$$\frac{N_s}{N_p} = \sqrt{\frac{Z_s}{Z_p}}, \quad \frac{Z_s}{Z_p} = \frac{N_s^2}{N_p^2}, \quad Z_s = \frac{Z_p N_s^2}{N_p^2}$$

$$\text{and } Z_p = \frac{Z_s N_p^2}{N_s^2}$$

Where N_p is the number of primary turns

N_s the number of secondary turns

Z_p the primary impedance, and

Z_s the secondary impedance or impedance of the load.

The turns ratio may be determined by applying a known alternating voltage across one winding and measuring the induced voltage across the other. The ratio of the two voltages will then correspond to the turns ratio.

Tube manufacturers state in their tables the values of load impedance (or load resistance) recommended for maximum undistorted power output. This load value is matched to the power-tube plate impedance by means of a transformer of proper turns ratio, as indicated above.

A rapid method for determining the impedance of an output transformer secondary of an amplifier in operation consists in adjusting a standard *output power meter* for maximum deflection and reading the impedance from the meter dials. The power meter is connected to the output transformer terminals, and a 400 cycle signal voltage introduced into the input circuit

of the operating amplifier. The meter-range switch is set to accommodate the maximum amplifier power output, and the meter input impedance is adjusted for maximum deflection of the indicating instrument. The reading of the impedance dial at this setting is the impedance of the output transformer secondary.

Power Output Measurements

The audio output watts may be measured with the audio-frequency output power meter or determined from voltage or current readings taken in a properly terminated output circuit.

Since the output power meter presents to the amplifier under test a load impedance of widely adjustable value, this instrument may be connected directly to the amplifier output terminals without introducing any further load or matching device, provided the input impedance of the meter is set to the value of amplifier output impedance. If the latter is not known, the meter impedance may be adjusted for maximum deflection of the indicating instrument with the amplifier passing a 400-cycle signal, whereupon the output impedance may be read from the dials.

Advantages of the output power meter are that its wattage readings are direct, requiring no calculations or conversions, and its input circuit may be closely matched to the amplifier output circuit.

By the voltmeter or ammeter method, output power levels are calculated from voltage or current values measured in a terminating circuit of proper resistance or impedance. This method is illustrated in Fig. 28-26. Circuit A is that for the indication of af power output in terms of voltage; Circuit B for power indications in terms of current readings. In both examples, the load resistor, R, terminates the amplifier output. Its resistance must accordingly be equal to the rated output impedance of the amplifier and its wattage must be sufficient to withstand the maximum power output.

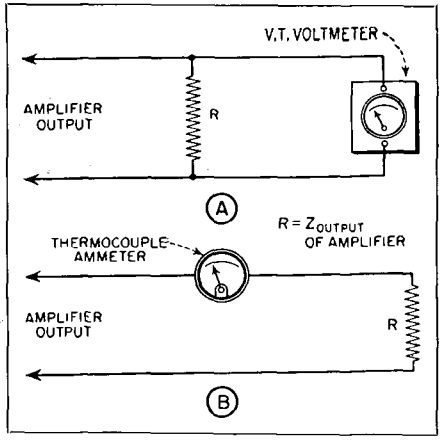

Fig. 28-26.

The ac voltmeter used in Fig. 28-26A must have good accuracy at the test frequency. It is strongly recommended that a vacuum-tube voltmeter be used in this position.

The amplifier power output is determined, in the voltmeter method, by means of the equation:

$$P = \frac{E^2}{R}$$

Where P is the audio output (watts)
E the meter reading (volts)
R the load resistance (ohms)

Alternatively, the value of the a.f. current flowing through the load resistor may be measured, as in Fig. 28-26B, and this value employed in a calculation of the a.f. power:

$$P = I^2 R$$

Where P is the audio output (watts)
I the meter reading (amperes)
R the load resistance (ohms)

For best results, the current instrument should be a thermocouple type ammeter or milliammeter. As a substitute for this type of current meter, a vacuum-tube voltmeter may be employed in connection with a suitable shunt for reading the current in terms of the voltage drop across the shunt.

Hum and Noise Level

Inherent hum and noise level of an amplifier or isolated stage may be

quantitatively analyzed either by means of a vacuum-tube voltmeter of sufficient sensitivity or a standard output power meter.

Any output voltage present when the signal voltage is removed, and not due to feedback, may be attributed to hum and noise components. If the one is known to be present in the absence of the other, it may be identified by a simple headphone or speaker listening test.

The simple vacuum-tube voltmeter or output meter will indicate the total magnitude of hum and noise components and will not differentiate between the two nor separately evaluate them. To determine the amplitude of each component, it is necessary to select that component from the total. This operation is best performed by a wave analyzer, which is in principle a highly selective vacuum-tube voltmeter which may be tuned successively to the fundamental hum frequency and each of its harmonics. It will generally be necessary to measure only the fundamental, second, third, and fourth harmonic amplitudes with the wave analyzer.

Sound equipment manufacturers usually express the hum or noise level as a number of decibels below maximum output, and the experimenter may, if he desires, convert the measured values into these units.

After the hum level has been accounted for, the remainder of the no-signal output voltage may be attributed to noise. A certain amount of this arises from thermal agitation in the input stage. However, coupling capacitors in resistance-coupled stages should be inspected for low dielectric resistance, with a good "megger," when the noise level appears excessive. A good coupling capacitor should show a dielectric resistance equal to 500 times the value of the grid resistor used in the succeeding stage.

The Control of Hum

The reduction of hum is a problem that sooner or later confronts every designer or builder of ac powered audio equipment. When there is plenty of room on the chassis and the input signal level is fairly high, say 1 volt, the job may amount to no more than relocating a grid lead or remembering to ground the heater supply. High-gain equipment however, working from a microphone or other low-level input, can present some tricky problems.

Shielding, chassis layout, planning of ground leads, choice of tubes, and filtering all enter into the problem. No instruments are essential to do a good job, although an oscilloscope is very helpful and a high-sensitivity ac vacuum tube voltmeter quite useful.[10]

High-fidelity reproduction of sound demands a much lower relative hum level than does ordinary radio quality. In a good audio system the hum (as well as other noise) should be 50 or 60 db below average listening level. Out of a 5-inch speaker a 30 db ratio is tolerable. Public address amplifiers are often rated in hum level below full output. In a high-quality home installation this type of rating is misleading because a good 20-watt amplifier in a living room is usually operated at 1 or 2 watts output, while the pa system is run closer to full blast.

The low signal levels available from tape playback heads and variable-reluctance phonograph pickups, together with the bass equalization required, aggravate the situation. Two other factors tend to alleviate it somewhat; the comparatively small dynamic range of records and tape—30 to 50 db, and the low impedance of such pickups at 60 cycles. With these low-level input sources in wide use, however, good quality reproduction requires more careful attention to the reduction of hum than ever before.

Plate supply ripple due to insufficient filtering is always a pure 120-cycle note, and can be readily located by clipping extra condensers across the "B" supply. The actual design of power supply filters is a process of calculating the minimum size of chokes and condensers to insure a certain hum level. Modern electrolytic condensers are cheap and of excellent quality, being used in some of the finest

[10]Fleming, L., "Controlling Hum in Audio Amplifiers." Radio & Television News, Nov. 1950.

laboratory equipment. A single pi-section filter, using a good choke, is generally adequate for any power stage, and an additional *RC* section for each preceding voltage amplifier stage will insure freedom from ripple as well as providing plenty of decoupling. There should be some series impedance in the positive side of the filter system, not all in the negative side, to get rid of ripple coupled through the power transformer capacitance. It is important to remember that filtering action is better for a given section, the lower the dc current drain, so that an *RC* filter section supplying only a milliampere or two to a resistance-coupled stage will give you much more filtering than a similar section feeding a stage that draws a lot of current.

Many excellent commercial amplifiers use no filter chokes at all, and many fewer sections than suggested above. One can usually get satisfactory results with this type of design, but the proper procedure is to start out with plenty of filter, and then start cutting down and rearranging.

Push-pull stages require less filtering and decoupling than single-ended stages. Power pentodes are more tolerant of plate (not screen) supply ripple than are triodes, because of their high plate resistance, *i.e.*, a volt of ripple produces less plate current swing. Negative feedback over the output stage will attenuate hum originating in that stage, but will not reduce hum originating at the input end of the feedback loop.

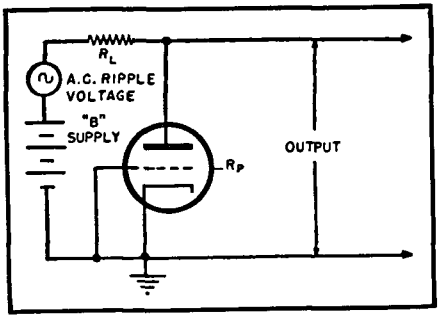

Fig. 28-27. Voltage divider effect attenuating plate supply ripple. The tube output is less than the "B" supply ripple by approximately the ratio of plate load resistance to plate impedance of the tube.

Plate Impedance Effect

The ripple voltage actually appearing at the plate of a tube is less than that at the "B+" terminal by the ratio: $R_p/(R_L + R_p)$ where R_L is the plate load resistance, and R_p the plate resistance of the tube. In Fig. 28-27, if the tube is a 6J5 operating with a 100,000 ohm load R_L and a plate impedance R_p of 10,000 ohms, only 1/11 of the "B" supply ripple will appear at the plate. An attenuation of at most 2 or 3 to one can be obtained with high-mu triodes, and practically none with pentodes.

Grounding and Balancing

In wide-range, low-level equipment with ac heater supply to the input stage it is advisable to use a hum-balancing potentiometer of 200 ohms or so across the heater supply, with the arm grounded. This adjustment will usually reduce the hum level of the input stage 10 db over the level obtained when using a fixed centertap. The total reduction over an arrangement with one side of the 6.3-volt supply grounded is from 20 to 30 db. The optimum adjustment varies slightly from tube to tube, and is less critical the lower the impedance in the grid circuit.

Heater supplies should be tied to ground or to a point having some definite dc potential (and bypassed to ground with 0.1 μfd. or so) but the reason why may not be obvious. A floating heater supply winding assumes a high ac potential, which it obtains through its capacitance to the high-voltage winding of the power transformer. Through capacitance and leakage from heater to grid, and other paths, this high ac potential couples large hum voltages into the signal circuits. It can even break down the heater-cathode insulation inside the tubes.

When one side of the heater supply is grounded, the ac potential available for such stray coupling into the signal circuits is only 6 volts instead of perhaps 300.

When the center-tap is grounded, two ac potentials of 3 volts each are on hand,

to couple hum into the grid circuit, but are 180 degrees out of phase. Their effects approximately cancel. If the stray impedances from each side of the heater to the grid are exactly equal, an exact center-tap will neutralize the hum. Since they are not exactly the same an adjustment is necessary.

TYPE	HEATER	DESCRIPTION
12AY7	6.3/12.6 v.; .3/.15 amp.	Double triode, noval miniature, mu = 35
5879 (RCA)	6.3 v.; .15 amp.	Voltage amplifier pentode, noval miniature
347A (Western Electric)	6.3 v.; .6 amp.	Triode, glass octal with top cap, mu = 16

Table 1. Tubes recommended for low-hum, low-microphonic applications.

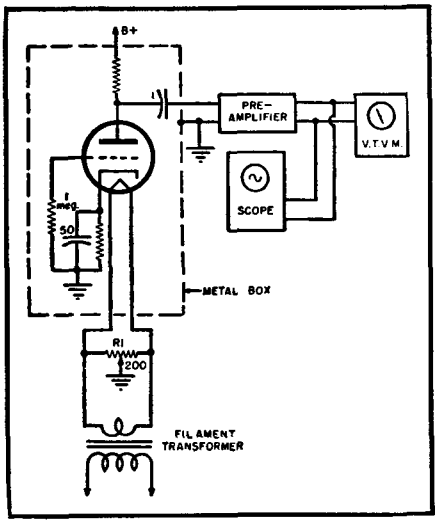

Fig. 28-28. Setup for measuring tube hum.

Choice of Tubes

Table 1 lists tubes recommended by the manufacturers for low hum, noise, and microphonic applications. Table 2 gives hum data on some standard receiving types.

For commercial service it is better to use one of the special types listed in Table 1, since the hum characteristics of ordinary types often depend on variables that are not controlled in production, and the special types are better and more consistent microphonically. Type 1620 was omitted from Table 2 because it is a selected 6J7.

A selected 6AU6, with a hum balance adjustment, can be so quiet that nothing but thermal noise can be seen on an oscilloscope, *i.e.*, an equivalent hum input at the grid of less than 10 microvolts, when using a 1 megohm grid resistor.

TYPE	HUM LEVEL (Referred to Grid)	REMARKS
6AU6	5-10 μv.	Fairly uniform
12AT7	10-30 μv.	Not very uniform, some tubes noisy and microphonic
6J7	30-50 μv.	Fairly uniform and quiet
6C4	10-100 μv.	Wide variation, some tubes very noisy

Table 2. The measured attainable hum levels of standard receiving tubes.

The data in Table 2 is based on measurements made on four tubes of at least two different makes of each type. The test circuit is shown in Fig. 28-28. Plate resistors are 470,000 ohms for pentode types and 100,000 ohms for triodes. Cathode and screen resistors follow tube manual recommendations. The 6AU6 is best, the 12AT7 next, and a close third is type 6J7. 6C4's are spotty and generally poor. All these types require selection for good results.

Figs. 28-29 and 28-30 show typical circuits recommended by the manufacturers for the 12AY7 and the 5879. An exception is that screen and cathode bypasses are shown larger for the 5879 than the data sheet recommends, because it is felt that cutting down the

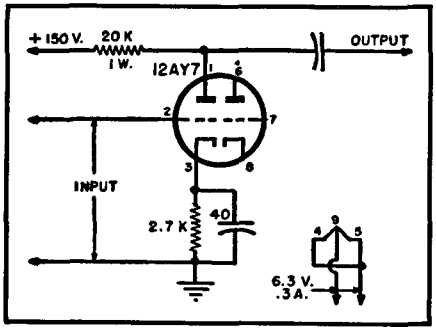

Fig. 28-29. Manufacturer's recommended circuit for 12AY7 as a low-level amplifier. Only one of the triode sections is shown.

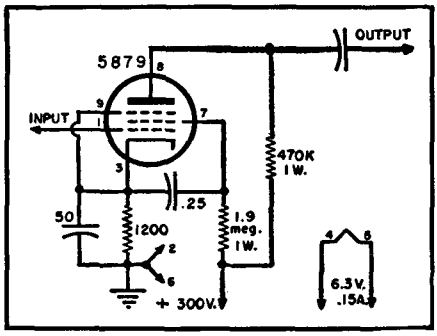

Fig. 28-30. Recommended circuit for RCA 5879 as a low-level audio amplifier. Pins 2 and 6 should be grounded. Gain is 150.

bass response is not the best way to reduce hum.

Fig. 28-31 shows a complete low-level input stage using a 6AU6, on which was measured a hum output, equivalent to less than 10 microvolts at the grid. The "B" supply was a conventional transformer and rectifier system with one pi-section of filter, but the only current drain was that of the stage shown.

Several things inside a tube contribute to ac ripple in its output. Consideration of these factors leads naturally to circuit planning for hum reduction. The first source of hum in the tube is leakage current between the heater and the cathode. This current is said to be around 0.04 microampere for voltage amplifier types and 1 microampere for power tubes. No definite data is available, but this leakage current probably increases greatly over these values as the tube ages. It is known to increase with heater voltage. Low-level audio stages should never have over 6.3 volts applied to the heater, and preferably about 5.8 volts. In the circuit of Fig. 28-31, increasing the supply from 5.8 volts to 6.6 volts doubled the hum output.

The effect of this leakage current is eliminated by keeping the dc potential low between heater and cathode (not over 10 or 20 volts) and by using a cathode bypass capacitance of not less than 40 μfd.

Electrolytic condensers are perfectly quiet. Grid bias cells however are apt to be noisy at millivolt levels.

Heater-Grid Leakage

Resistive leakage from heater to grid can be troublesome. If, for example there is 10,000 megohms of unbalanced leakage from a 6 volt source to the grid, and the input circuit impedance is 1 megohm, 0.6 millivolt of 60 cycle ac will appear at the grid. Leakage of this magnitude is not unusual across black phenolic tube bases and sockets, not to mention cotton insulation on pushback wire. With single-ended tubes, mica-filled or ceramic sockets are advisable.

Heater-Grid Capacitance

The capacitance between the heater leads and the grid is an important hum characteristic of a tube type. The low-noise types in Table 1 have internal shielding between the grid and heater. 1 $\mu\mu$fd. of stray unbalanced capacitance here will introduce 2 millovolts of hum into a 1 megohm grid circuit. The situation is saved in practice by hum balancing and by the fact that the actual capacitance inside miniature tubes is less than 1 $\mu\mu$fd., and that the impedance presented to the grid circuit by phonograph pickups, tape heads, and microphones is a good deal less than a megohm, pro-

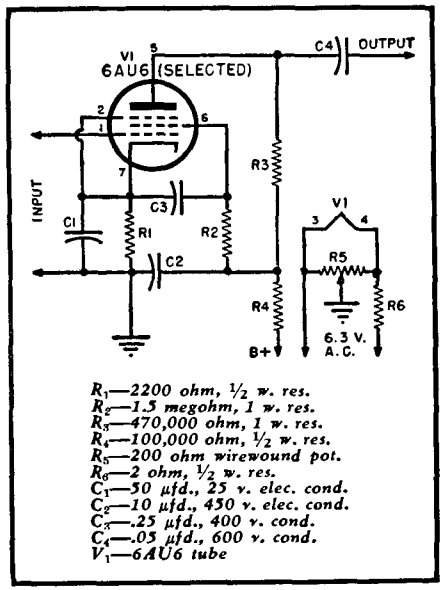

Fig. 28-31. Low-noise preamp using 6AU6.

vided, that is, that the layout minimizes the stray capacitance which unavoidably remains.

Capacitive Hum Balancing

A fine adjustment on heater supply center-tapping can be obtained by trimming the capacitances between either side of the heater and the grid, as well as by using a potentiometer. Adequate trimming can usually be affected by lead dress alone. Bring an inch or less of heater lead close to the grid lead, using an insulating rod for a tool. One side of the ac supply will increase the hum level, the other side will reduce it. Observation of the tube output on an oscilloscope or meter is rather necessary during this operation.

Wiring Techniques

Most of the considerations outlined above as relating to hum in tubes apply as well to the wiring that goes to the tubes. Capacitance from any ac wiring to a low-level signal circuit introduces a 60 cycle voltage therein in direct proportion to the ac voltage present, the stray capacitance, and the impedance of the affected circuit.

Suppose we have a grid circuit, Fig. 28-32A, with a resistance R of 1 megohm, having its high side coupled to a source of ac E_H through a stray capacitance C_H. If the hum voltage E_H is 1 volt, there will appear at the grid 1/2300 of a volt, or about half a millivolt, since the reactance of 1$\mu\mu$fd. at 60 cycles is about 2300 megohms. This is only 26 db below 10 millivolts. If C_H should be coupled to a 300-volt power transformer lead, the grid circuit would receive 300/2300 volt, or 0.15 volt—an intolerable level. 1 $\mu\mu$fd. is about what you get between two pieces of pushback wire an inch long twisted loosely together.

Fig. 28-32B illustrates the same situation when the signal source C is capacitive, as crystal microphones and pickups. The stray "hum" capacitance and the signal source act simply as a capacitive voltage divider. If C is 2000 $\mu\mu$fd. and E_H 1 volt, the voltage at the grid will be 1/2000 volt.

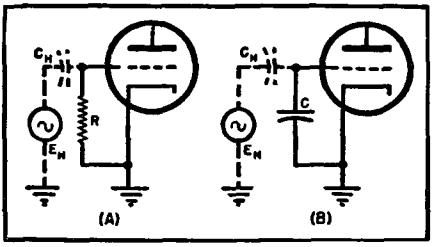

Fig. 28-32. (A) Capacitive hum pickup. (B) Capacitive hum pickup in crystal microphone or in phonograph input circuits.

All this does not mean that one should shield the daylights out of all low-level wiring, and locate input stages a yard away from everything else. Rather, it is necessary to be aware of the magnitudes of these effects, and to recognize a defective wiring layout. Lavish use of tinned copper braid is rarely necessary. It is really needed only to salvage a poorly-planned chassis layout, or in unusually compact assemblies, or when gain and tone controls are grouped together at some point removed from the associated circuits. The capacitance between two wires can be very close to zero if (1) they are a couple of inches apart, (2) they are kept close to the chassis, not up in the air; and (3) advantage is taken of natural cover to help in shielding, *i.e.*, bypass condensers, dc wiring, and other "cold" components.

Twisting of heater leads is not necessary if they are close together and grid leads are kept away. With top-cap tubes it is well to use braid on the grid lead and to put a "hat" shield over the grid cap.

Magnetization of Tubes

Glass tubes of a given type show more individual variation in hum level than metal tubes. The British journal *Wireless World* has reported that this phenomenon is associated with permanent magnetization of the tube elements, which seems to increase the hum level in a way not yet understood. The remedy is demagnetization with a gradually-removed 60 cycle field, the same as jewelers do with watches. The winding of an old power transformer, removed

from the core, can be used for a demagnetizing coil. Connect the secondary across the 115 volt line (using series resistance if necessary, to keep it from getting too hot), insert the tube, then slowly withdraw it.

Chassis Currents

Gradients of the order of half a millivolt per foot often exist across a chassis on which a power transformer is mounted. The transformer winding induces a 60 cycle voltage, causing a circulating current in the chassis. Hence it is not good to include a chassis in series with a low-level input circuit. Fig. 28-33C illustrates what happens when the cathode and grid of a tube are returned to different points. E_H denotes a hum voltage distributed along the chassis. This voltage is included right in with the signal. The remedy is to return grid and cathode to the same point, as in Fig. 28-33F.

Ground Loops

When one starts wiring from a diagram without thinking too much about the purpose of each lead, the situation indicated in Fig. 28-33B may develop. Here, too many ground leads have been used, forming a shorted turn or ground loop. Stray magnetic fields eagerly induce ac voltage in such a loop, and the voltage across a portion of the loop is included in the grid circuit. The effect is usually very small, but an aggravated case can cause trouble.

If the grid lead and grid return be too widely separated, as indicated in Fig. 28-33E, another one-turn coil is created, ripe for the induction of 60 cycle voltage. Since the voltage induced in a loop is proportional to its area, the remedy is to keep the grid lead and return lead close together.

These magnetic effects are aggravated when they are on the low-impedance side of an input transformer. Phonograph motors have magnetic fields just like power transformers.

Magnetic Pickups

Fig. 28-33A shows a situation often encountered when using pickups of low output level, such as the *GE* and *Pickering*. Here the shielded pickup cable is grounded to the motor frame at one end, and to the amplifier chassis at the other. The motor frame has a fair-sized capacitance to the 110 volt line, as does the amplifier chassis. These capacitances are indicated as C_1 and C_2 in the diagram, with the line voltage in between. C_1 and C_2 can be as large as 0.1 μfd. if line isolating condensers are used. A hum voltage is thus applied across the ends of the cable shield, and the resulting voltage drop can be as much as 50 microvolts,

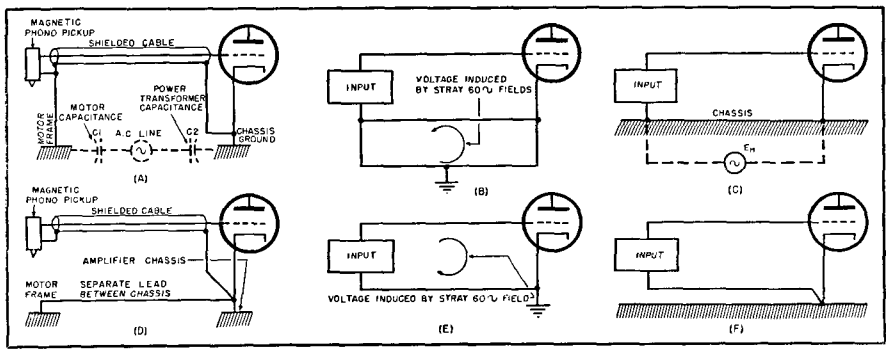

Fig. 28-33. (A) Hum induction by using cable shield to interconnect phonograph turntable and amplifier chassis. (B) A ground loop. One of the three ground leads should be opened. (C) Hum injected into input circuit from ac voltage gradient along chassis. (D) Correct method of connecting low-level phonograph pickup to amplifier. (E) An input wiring loop. This con give trouble in tope playbock input circuits if loop is close to motor or power transformer. Shielding grid leod alone will not help. Loop must be closed up by moking shield the only path between low side of signal source and cathode return of first tube. (F) Grounding grid return and cothode to some point to avoid hum from chassis gradients.

included directly in the grid circuit. The remedy is to use the shield only for the signal voltage, and to employ a separate wire to connect the two chassis, as shown in Fig. 28-33D. This wire should be close to the cable to avoid loop pickup effects which can be just as bad. Two-conductor shield cable can be used, too.

Tape Recorders

Tape playback is the most critical problem of all, because of the very low output level of tape heads—1 millivolt or so—and the heavy bass equalization required. All precautions must be observed. An important residual hum source is ac magnetic induction in the playback head itself. *Audio Engineering* has reported a simple method of neutralizing the residual induced hum. Attach a small piece of sheet iron, ½ inch square or so, to a stick, and try holding it in various positions near the playback head until a location is found that dips the hum level to a minimum. Then permanently fix the iron piece in place. *Permalloy* is better.

The iron acts as a distorter of the field, and, in the right position equalizes the effective fields applied to the two sections of the hum-bucking winding used in the head.

Audio Transformers

Unshielded low-level input transformers pick up hum from power transformer and motor fields, typically on the order of a few millivolts across the high winding. At microphone levels, an ordinary strap-mounted or similar input transformer simply cannot be used on the same chassis with a power transformer. This is why intercom sets always use an ac-dc type circuit.

Transformers of the two-coil "humbucking" construction are somewhat better. If adjustably mounted at least a foot from the power transformer, such a unit can be oriented to be quiet enough for pa purposes, but not for broadcast quality. The small "ouncer" size is about as good, since hum pickup decreases with size.

By far the best construction is that with multiple telescopic *Permalloy* shields. A cast iron case alone does little good. Multiple alloy shielded units are at least 30 db better than any other construction.

Hum Characteristics

Fig. 28-34 shows tracings taken from an oscilloscope screen, with typical waveforms of ac pickup from various sources. They have certain distinctive qualities. Straight capacitive pickup is a slightly rough 60-cycle wave. Plate supply ripple due to insufficient filtering is a very smooth 120 cycle note. Hum, due to inadequate cathode bypassing, or an ungrounded heater supply, is often an asymmetrical 60 cycle wave with sharp corner, Fig. 28-34B.

Inductive hum picked up by transformers is very rich in harmonics (Fig. 28-34C) but free from sharp peaks and spikes. It has a sort of musical sound, like the hum sometimes heard on telephone lines.

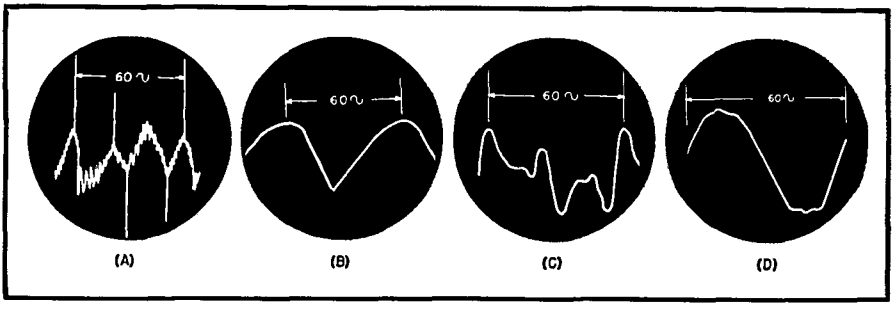

Fig. 28-34. (A) Noise pickup from fluorescent lamp. (B) Heater-cathode leakage current. (C) Inductive hum pickup by audio transformer. (D) Capacitive hum pickup from ac wiring.

SOURCE	REMEDY
1. "B" supply ripple	Filtering; use larger screen bypass in pentodes; use high load resistance with triodes.
2. Capacitive pickup from ac wiring to tube grids	Separation of leads; shielding; use potentiometer for grounding center of heater supply.
3. Heater-grid leakage	Mica-filled or ceramic sockets; keep wiring separated.
4. Heater-cathode leakage	Use cathode bypass of at least 40 μfd. Try positive dc bias of about 5 v. on heater supply.
5. Magnetic ac modulation of tube plate current	Locate input tube 6" or more from power transformer and phono motor. Use iron shield on glass tubes.
6. Chassis gradients	Ground grid return and cathode return to same point.
7. Gradients along cable shields	Ground mike or phono pickup shield at one point only; use separate lead to interconnect chassis; keep both leads close together.
8. Ground loops	Keep grid and return leads close together and away from power transformer. Interconnect ground tie points through only one path. Do not duplicate separate chassis grounds with wire interconnections.

Table 3. Some of the most common sources of hum and a listing of possible remedies.

Fluorescent lamp interference is characterized by sharp spikes and hash as in Fig. 28-34A. The frames of the fluorescent lamps that are placed near the bench should be well grounded and the lamps themselves kept at least two feet from the work.

Miscellaneous Sources

Broadcast receivers sometimes exhibit hum only in the presence of a received carrier. This is due to rectification of rf picked up by the house wiring, by copper oxide in loose connections therein. The rectified signal is modulated by ac. The remedy is to eliminate rf signals getting into the set from the ac line, by grounding both sides of the line to the chassis through condenser of about .005 μfd.

The vhf oscillators, such as oscillators in FM and TV receivers, acquire a 60 cycle frequency modulation in circuits where the cathode is "hot" to ground and the heater is not, *i.e.*, where cathode and heater are not at the same rf potential. The mechanism of this effect is not understood. The cure is to use a circuit where cathode and heater have the same rf potential. It is satisfactory to use either a grounded-cathode oscillator circuit, or a "hot" cathode circuit where cathode and heater are connected together, feeding the free side of the heater through an rf choke.

Center-tapped heater supplies are not too feasible in systems involving high-gain, multi-stage rf or if amplifiers, because one side of the heater has to be grounded at each tube, preferably right to the chassis, to prevent regeneration by coupling through the common heater wiring.

Cutter Head Measurement

There are several means used for determining the response of cutters and associated equipment. One is the use of an audio oscillator, vacuum-tube voltmeter and the regular output level meter on the recording amplifier. With this combination we can obtain definite patterns on the discs (Buchmann-Meyer effect) that will show exactly what is taking place. A disc that has been cut *properly* with a sharp stylus, preferably sapphire, will have grooves which are *shiny* in appearance and capable of reflecting light rays when placed in proper position with respect to the eye of the observer. Unfortunately, much detail is

[11]Dickerson, A. F., "Hum Reduction," Electronics, Dec. 1948, pp. 112-116.

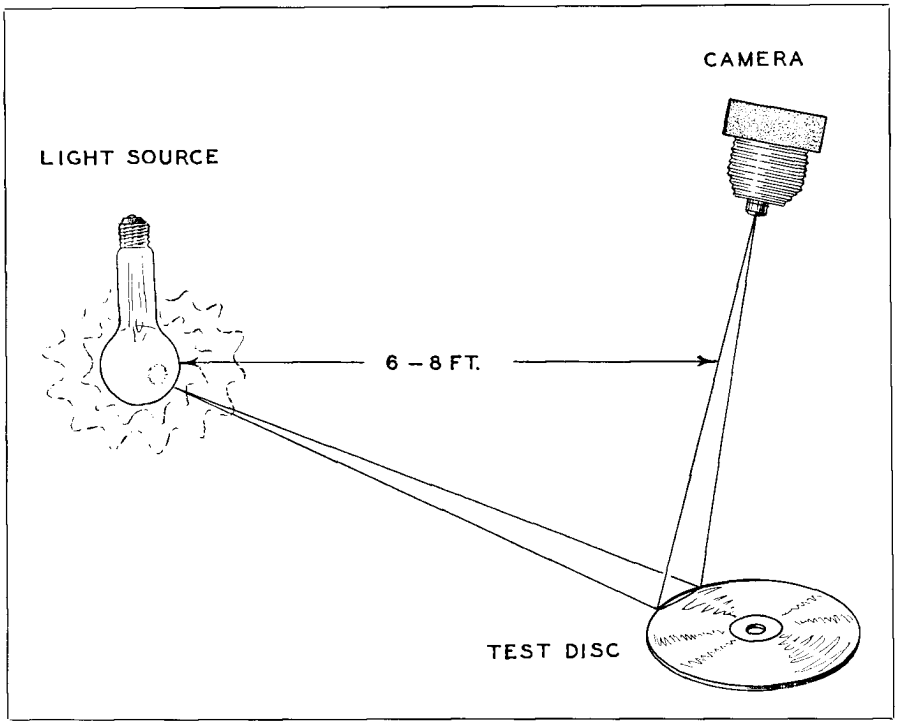

Fig. 28-35.

lost in reproducing the original photos, but they illustrate the effects.

An improperly cut disc (one cut with a dull stylus) cannot assume this shiny character and is not suited to the study and analysis of frequency response. The setup used to obtain the following photos makes use of a single light source. The author used a No. 2 photoflood lamp without reflector and a standard make of 5″ x 7″ camera.

The setup is shown in Fig. 28-35.

The electronic end of the setup consists of Audio Oscillator, a VTVM to keep the audio output of the oscillator at a fixed level, a recording amplifier, the db meter to observe the cutting level at the cutting head, and the recording table and fresh disc.

The records are all at a standstill in the illustrations and were made from the same general position of the camera except for distance.

The most important tests for the layman deal with the determination of cutter response as it is called upon to modulate the various frequencies on the disc. If these are lacking or improperly cut, or if too high or too low a cutting level is used, he may, with this setup, determine where the system is lacking and take proper steps for correction where needed. The procedure may be used on any type of lateral disc recorder.

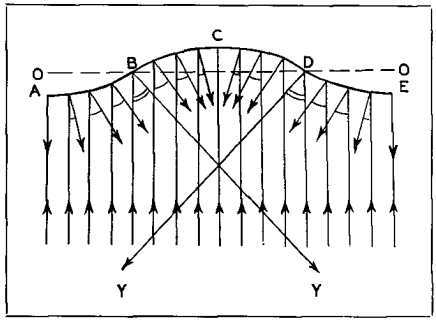

Fig. 28-36.

Light Patterns

Fig. 28-36 illustrates the principle of the optical method of measuring velocity/amplitude on records, due to *Buchmann* and *Meyer* and so named after them. The curved line ABCDE at the top of the figure represents the side of a groove, in a sinusoidal section of the disc material. Parallel light (a point source) falls upon it and is reflected. The largest angle, Y, between an incident and reflected ray, occurs at the inflection (bending) point of the curve. If OO is the time axis (or the groove-width) the curve ABCDE depicts the displacement, so that Y is given by dx/dt, which is the velocity/amplitude, or lateral velocity, etc. No larger angles than Y are possible. In Fig. 28-37 a number of reflected rays is shown. The outermost ones radiate from the points of inflection. A luminous band can be seen if the line DB is moved along its continuation so that the reflecting spots dissolve into each other. The width of the light band is determined only by the velocity/amplitude of the curve, and is independent of the position of the observer's eye(s). When the line OO is a circle, *i.e.*, a groove, on a disc, the same result is obtained.

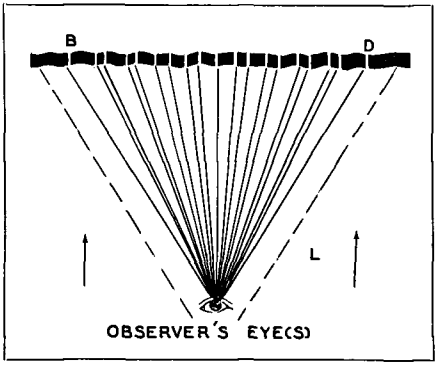

Fig. 28-37.

Now let us analyze the first test record, Fig. 28-38. This disc was cut at 33⅓ rpm on a 13¼ inch *disc*, inside-to-outside. The minimum diameter was 5″. A (plus) 18 db cutting level was maintained over the entire frequency range and the controls on the amplifier were set so that the audio response is essentially flat from approximately 20 cps to 15,000 cps. Note that the absence of equalization has a definite effect on the cutting capabilities.

The frequencies appearing on the disc, from the right (hub) to left on the illustration are as follows: 1000, 2000, 3000, 4000, 5000, 6000, 7000, 8000, 9000, 10,000, 11,000, 12,000 cps and then in the same steps in reverse back to 1000 cps and then on through the lower frequencies of 900, 800, 700, 600, 500, 400, 200, 100, 50 and 25 cps. The small light portions between each series of grooves that were cut, indicate the normal surface noise, or unmodulated grooves. A complete story has been told on the finished disc—and the interpretation follows. The middle register, from 1000 to 7000 cps shows a rather even groove modulation, as indicated by the width of the cut lines. The response begins to taper off at 7000 cps and we still observe that cutting is taking place up to over 10,000 cps. Then the surface noise level almost equals the modulated level.

From the above observation it is apparent that we must *boost* the frequencies *above* 7000 cps by several decibels in order that they be modulated on the disc, if the finished recording is to be brilliant in character, and if we expect to be able to hear these frequencies above the surface-noise level.

The effects of boosting may be observed in Fig. 28-39 and 28-40. Returning once more to the analysis of Fig. 28-38, we find that we have cut the disc properly from the 7000 cps range down to 50 cps. At 25 cps we can see a slight dropping off in response, but this is still above the surface noise by the amount of 2 or 3 db. The pattern on the outside of the disc is 400 cycles cut at a constant reference level (in this case) of (plus) 14 db.

If it were possible to compensate for the loss of the higher frequencies, we could increase the width of the pattern at those frequencies and this would be done by increasing the cutting level

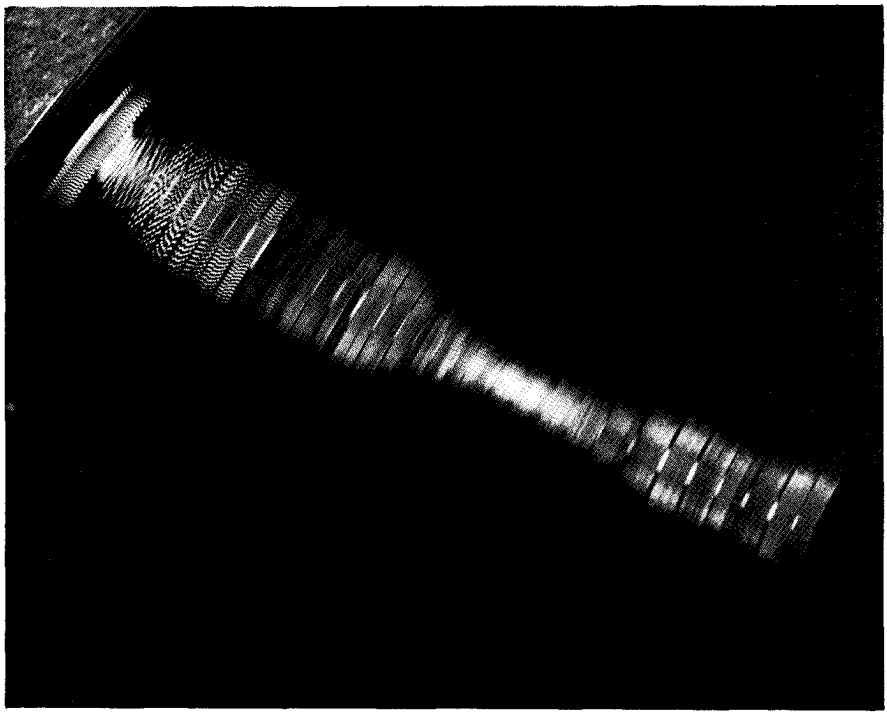

Fig. 28-38.

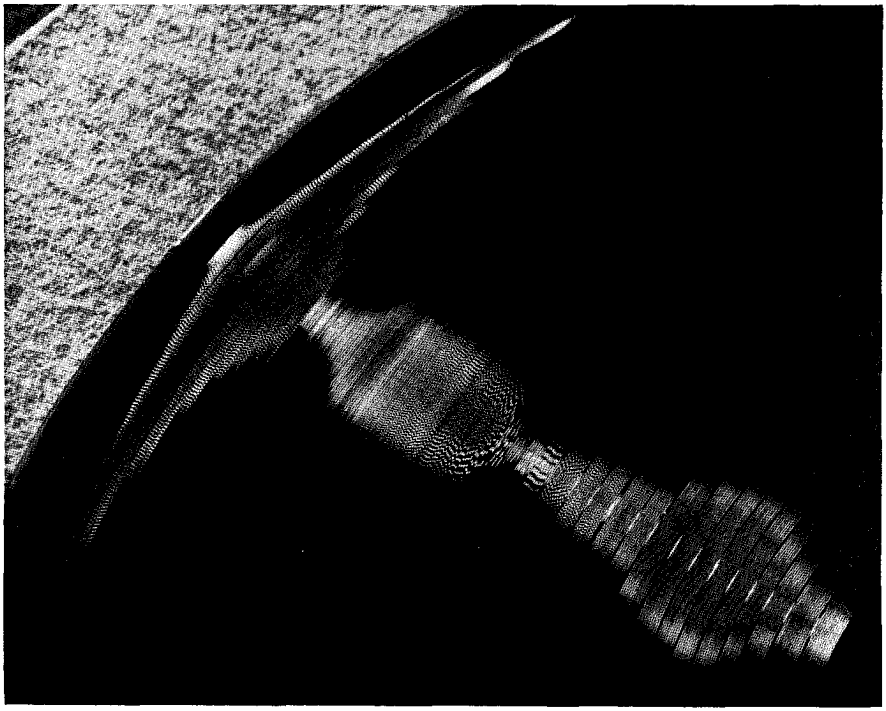

Fig. 28-39.

(volume) over the range that requires this treatment. This may be done by proper use of the bass and treble equalizers (tone controls).

Now we shall make another test recording to determine how far we can boost the high frequencies without getting into trouble from distortion, etc. Fig. 28-39 illustrates the effect. Remember that *the widest patterns are cut at the highest level,* and *the narrowest grooves are cut at the lowest level.* Starting at the right side of the illustration we find our first frequency, 10,000 cycles in this case. This disc was started at a minimum diameter of 6″ in order to attain more velocity (record speed) in order that the high frequencies could be more fully modulated.

The treble control on the amplifier was set for an increase at 6000 cycles of (plus) 8 db above normal. Thus, volume was increased automatically at this frequency so that a note of 6000 to 7000 cycles appearing at the amplifier would be boosted by that amount. The bass control was left at normal response. The audio oscillator output was kept at a *constant level* while the cutting took place.

Analysis of Fig. 28-39 shows that there is a definite peak both at 7000 cycles and 6000 cycles. In fact the two are cut at about the same amplitude. Counting the groove cuts from the inside-out, right to left, we find the following frequencies: 10,000, 9000, 8,000, 7000, 6000, 5000, 4000, 3000, 2000, 1000, 900, 800, 700, 500, 300, 100 and 50. Note that the frequencies below 300 cycles fall off rapidly in amplitude. This is necessary in cutting "Constant Velocity" records and is known as the "turnover" or point where the characteristics are altered in the equipment so that the bass frequencies will not overcut the groove walls, due to the greater stylus displacement. However—these low notes will still be reproduced satisfactorily and the bass control may be

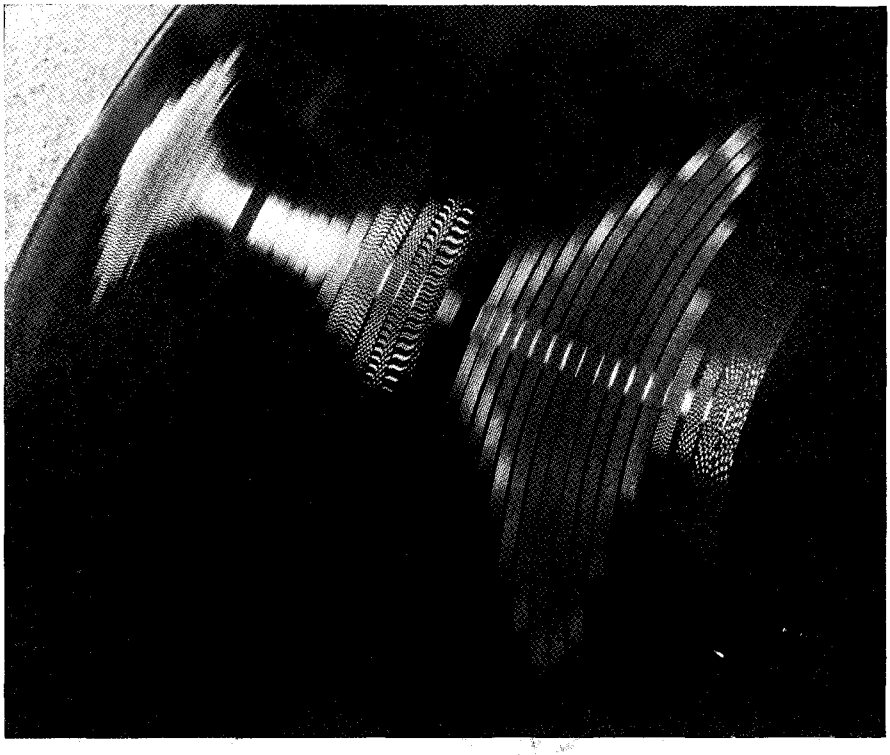

Fig. 28-40.

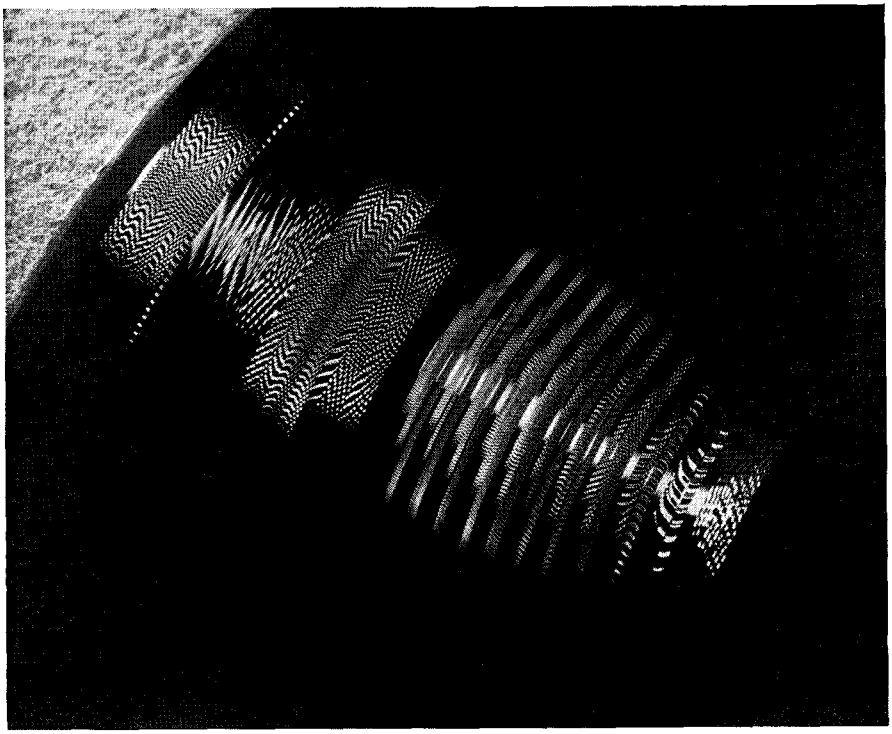

Fig. 28-41.

set to effect a boost when the record is played back.

The second portion of the disc, from the narrowest part out, is cut with a rising frequency in linear steps from 50 cps to 15,000 cps. Note that the response is very uniform from about 100 cps to well over 7000 cps. This is considered very satisfactory from the listeners point of view. However we can still improve matters to increase this response to include a greater audio range as we shall see later.

The third portion has been cut with a 1000 cycle note in steps of 2 db from (plus) 12 to (plus) 26 db and returning in 2 db steps to (plus) 12 db. This illustrates the effect of *cutting level.* Note the wide pattern when high levels are reached. In fact, we actually overcut the record in order to illustrate the point. Now if we play back the test record and observe where distortion is heard, we have an accurate guide for the proper cutting level to use on our own particular equipment.

Other frequencies may be observed under the same conditions, and the patterns will give the same indications.

Fig. 28-40 illustrates a series of three tests. First is a frequency run from 50 to 12,000 cycles, cut at a level of (plus) 18 db. The treble control at the amplifier was set to full boost at 4000 cycles and the bass control to full boost. The steps are as follows: 50, 100, 250, 500, 1000, 2000, 3000, 4000, 5000, 6000, 7000, 8000, 9000, 10,000, 11,000, 12,000 cycles.

Observation discloses that the frequencies of 50, 100, 250 and 500 cycles are cut at a uniform amplitude. There is an increase of approximately 2 db at 1000 cycles and from there up to 5000 we observe steps of better than 2 db. for each successive frequency. The middle register has been boosted considerably from the normal flat response of the amplifier and the greatest peak volume is at 4000 cycles.

The second part seen on the disc was cut with the bass frequencies cut off below 200 cycles and the highs atten-

uated above 800 cycles. Comparison with the data kept on this disc shows that the frequencies above 1000 cycles fall in level to that of the disc and are completely missing when the record is played back. This cut was made to illustrate the effect of peaking at 300 cycles without the extreme high and low notes.

The outside cutting is at 1000 cycles, similar to that on Fig. 28-39. Here we used steps of 1 db instead of 2 db. This gives a sort of crescendo effect to the note and the action may be observed readily. The *maximum* cutting level was (plus) 18 db at the head.

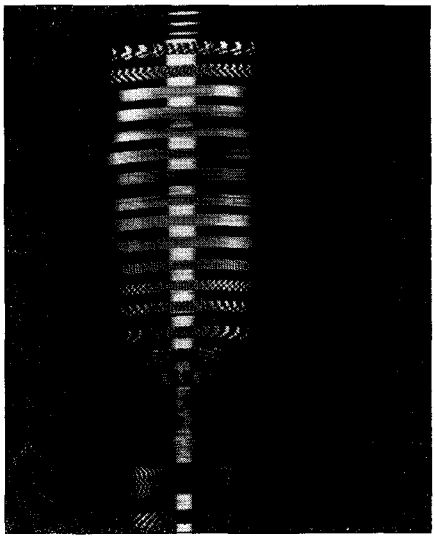

Fig. 28-42A. The Clarkstan 2000S steady state frequency record. (Courtesy Clarkstan).

Next we come to the patterns illustrated in Fig. 28-41. These are rather unusual in some respects and were made to illustrate the effect when notes are cut at various amplitudes. This test record is divided into two parts: The first cutting (inside) was made as follows: Frequencies of 50, 100, 200, 300, 400, 500, 600, 700, 800 900 and 1000 cycles were cut, each at three volume levels, (plus) 18 db, 14 db, and 10 db. Observe the heavy pattern left in the 50 cycle grooves and note how the taper widens as the volume is increased. This is more clearly illustrated on the rest of the cuts from 400 cycles on up. This test shows excellent uniform response from 500 cycles to 1000 cycles, in fact it is safe to state that this is within ½ db. The test could have been continued for the remainder of the available space and the pattern would indicate the response over whatever range we decided to use.

The remainder of the record was cut at 200, 400, 300, 100, 50, and 25 cps at a level of (plus) 18 db while the outside straight-sided cuts are 400 cycles at (plus) 18 db as a reference. Note that the response falls off at 50 cycles which is normal without any boost. These cuts are to be used for low-frequency reference standards and therefore no treatment was wanted.

COMMERCIAL FREQUENCY RECORDS

Several companies, including *Clarkstan,* produce special Vinylite records for

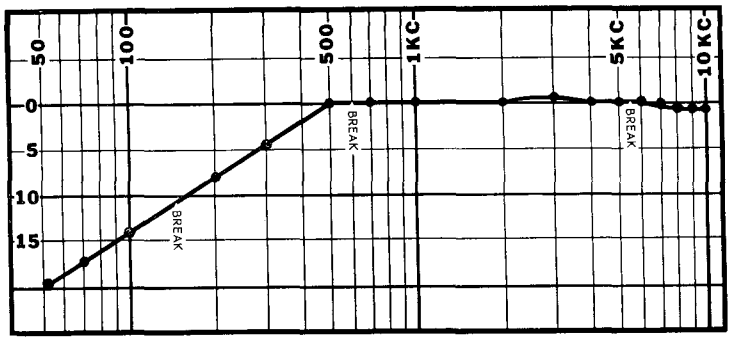

Fig. 28-42B. Frequency response curve of No. 2000S.

test purposes. The *Clarkstan* steady state frequency record, Fig. 28-42A, is recorded constant velocity above 500 cps and constant amplitude below 500 cps.

Frequencies:

500 cps, 1000 cps, KC: 10, 9, 8, 7, 6, Break, 5, 4, 3, 2, 1 and cps: 700, Break, 500, 300, 200, Break, 100, 70, 50, 1 KC and 500 cps.

Groove Width: .0058″
Playback stylus: .0027″ Radius 47° included angle.
Double Displacement at 1000 cps .00098″
Velocity: 7.9 cm/sec peak
Lines per in.: 105
Cutting Stylus: 87½° included angle .001″ rad.
Crossover: 500 cps
Cutting Head: Olson

The frequency response of the *Clarkstan* 2000S is shown in Fig. 28-42B.

A MICROGROOVE STEADY STATE FREQUENCY RECORD

The *Clarkstan* Number 2001S, Fig. 28-43A, recorded on 12-inch Vinylite at 33⅓ rpm, employs the modified NARTB curve.

Frequencies:

KC: 1, 10, 9, 8, 7, 6, Break, 5, 4, 3, 2, 1.5, 1 and cps: 700, Break, 500, 400, 300, 200, 150, Break, 100, 70, 50, and 1 KC.

Groove Width: .0023″
Playback stylus: .001″ Radius, 47° included angle
Double Displacement at 1000c:- .006″
Velocity: 4.3 cm/sec peak Lines per in.: 180
Cutting Stylus: 87° included angle, .0002″ radius
Type of Cutting Head: RCA—Type MI—11850-C (Temperature Compensated).

The frequency response of the *Clarkstan* 2001S is shown in Fig. 28-43B.

Microscope Method

The microscope method is suitable for initial calibration of a cutter, especially if adjustments can be made without removing the head. But the method is slow and tedious and is inaccurate at the higher frequencies where, due to constant stylus velocity, the amplitude of motion is small and the spot of light is no longer small in comparison with the amplitude of movement. Most recorders maintain constant amplitude stylus motion below a frequency, known as the cross-over frequency, and constant velocity above, so that, at the higher frequencies the amplitude decreases, since the product of frequency and amplitude

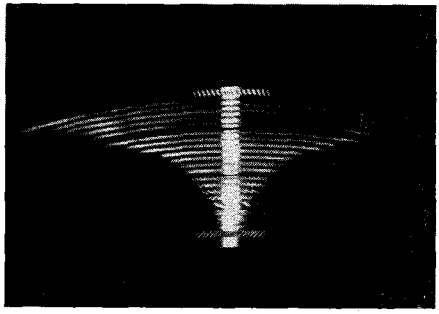

Fig. 28-43A. Clarkstan microgroove steady state frequency record. (Courtesy Clarkstan).

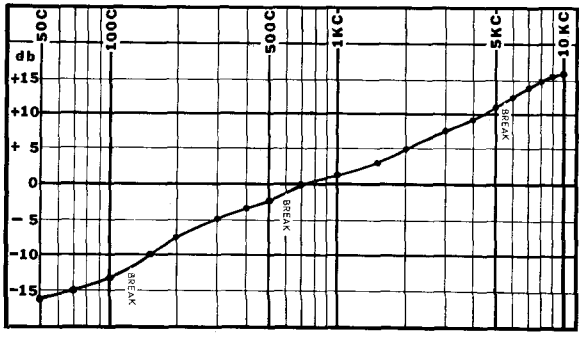

Fig. 28-43B. Frequency response curve of No. 2001S, Microgroove record.

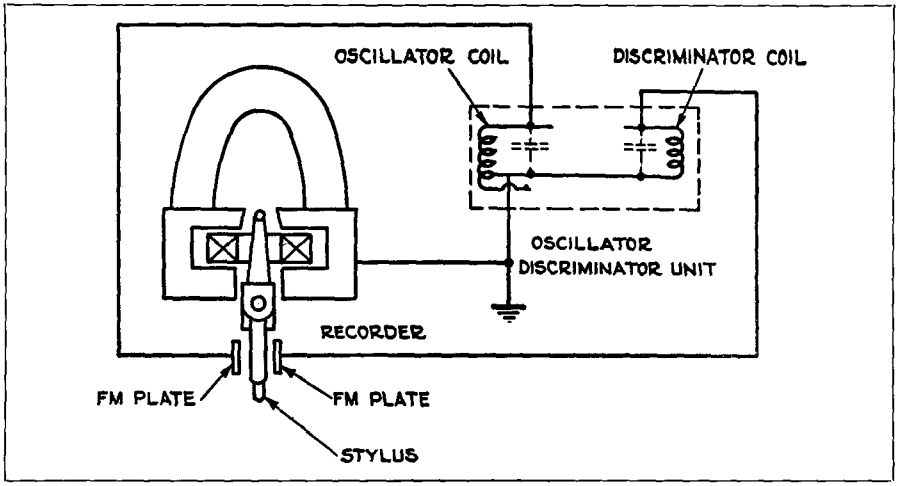

Fig. 28-44. Basic arrangement of the FM Calibrator. Small plates on either side of the stylus bar are connected to an oscillator discriminator unit mounted on the carriage. (Courtesy RCA).

must remain constant for constant velocity motion. Constant amplitude at the lower frequencies is of course necessary to prevent overcutting, unless excessive spacing of grooves is resorted to with the accompanying loss of playing time.

Photoelectric Cell Method

The microscope method was improved upon by substituting a photoelectric cell for the eye and having the stylus modulate a light beam being transmitted to the cell. Calibrators of this type have been in use for some years and in general have proven to be accurate and reliable. They do not, however, permit calibration while cutting a disc.

FM Method

The problem of being able to calibrate the recorder under actual cutting conditions was solved by an FM system.[12] Here is a device which is attached to the recorder without requiring much space or adding mass to the moving system, one which does not couple electrically to the driving coils of the recording head, and which can be so arranged as not to interfere with the cutting action of the stylus.

[12]Roys, H. E., "An FM Calibrator for Disc Recording Heads," Broadcast News.

Fig. 28-44 shows the arrangement.* Two tiny plates, one on each side of the stylus shank or stylus bar, insulated from each other and from the recorder are spaced a few thousandths of an inch from the stylus. Neither mass nor stiffness is added to the moving system so there can be no change in its mechanical action. Flexible leads from these plates connect to the oscillator-discriminator unit mounted on the carriage located close to the recorder. Variation of capacitance between the plates and the stylus due to its motion changes the oscillator frequency and tuning of the discriminator.

Monitoring

The FM calibrator was designed primarily for calibrating purposes, but may also be used for monitoring. As such it is ideal when cutting frequency records for reproducer tests. The recorder can be carefully calibrated beforehand and the correct input level for each band determined. Then when cutting the final disc the calibrator may be used as a check on the recording level, making slight corrections if necessary, or if it is

**The FM Calibrator described here was developed by Mr. Alexis Badmaieff, RCA Engineer.*

Fig. 28-45. The Scott 410-A Sound Level Meter. (Courtesy H. H. Scott, Inc.).

undesirable to change the level during recording, the correction can be noted and applied afterwards when using the disc.

Measurement of Sound

A sound-level meter which complies with the *American Standard* Sound-Level Meters for Measurement of Noise and Other Sounds, Z24.3-1944, should be used for measuring sound level. Fig. 28-45.

The sound-level meter measures weighted sound pressure level and the results are expressed as "sound level" on a decibel scale, the zero of which corresponds to a sound pressure of 0.0002 dyne per square centimeter at 1000 cycles. This reference point is approximately the minimum sound pressure that would be audible in a very quiet room to an observer having acute hearing. A sound level of 120 db is approaching the level where a sensation of feeling is produced and as the level is still further increased the sound becomes painful. Fig. 28-46 shows the approximate sound levels for a number of commonly encountered conditions. For example, a very quiet residence has a sound level of about 33 db, an average office about 57 db, and very noisy factories 90 db or more. It may also be useful to know that for levels above 40 db, a sound level change of from 6 to 9 db (depending on whether the noise is complex or essentially single frequency), corresponds to approximately doubling or halving the loudness sensation. At levels from 0 to 40 db, the loudness of the sound is doubled for an increase in sound level of from 4 to 7 db.

The sound level of a sound is purely an objective measurement. The results of subjective measurements are expressed as the loudness level of a sound in phons where the loudness level is equal in magnitude to the sound pressure level of the 1000-cycle tone which is judged by an adequate sound jury to be as loud as the sound. For the case of single-frequency tones, the relations between sound pressure level and loudness level have been determined empirically and are shown as a series of contour curves in the *American Standard* for Noise Measurement, Z24.2-1942. Since these contours vary materially as a function of level, three of these contours were selected to cover the range for measurement purposes and these have formed the basis for the response frequency characteristics built into the sound-level meter.

Three frequency response characteristics are provided in the *American Standard,* Z24.3-1944. Curve A approximates the 40-db loudness contour, Curve C is a flat response for higher levels. Whenever sound-level measurements are made, the weighting used, *i.e.,* 40, 70, or flat, should always be reported. Due to limitations in microphone design, uncertainties in their calibration, and variations in individual microphone and amplifier characteristics, deviations from the design objective responses given in the Z24.3-1944 Standard nearly always occur in practice. Allowable deviations in response are given in detail in the Z24.3-1944 Standard from which the six

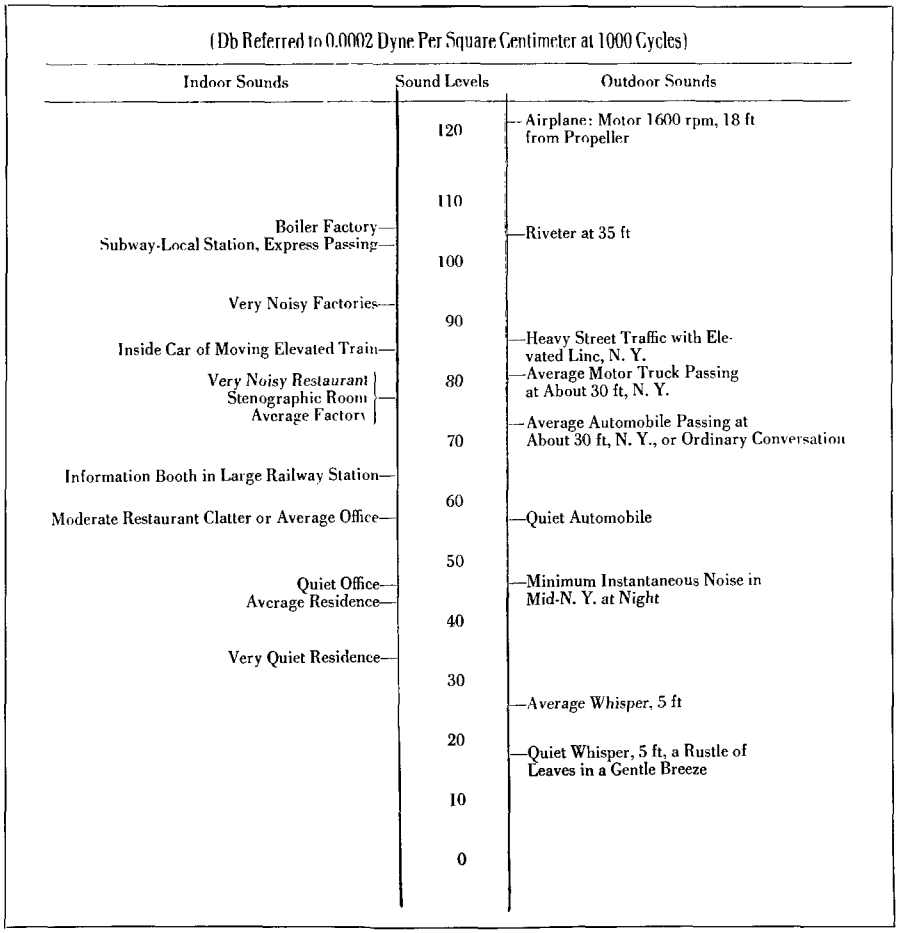

Fig. 28-46. Sound levels of common sounds. (Courtesy American Standards).

illustrative values given below were taken:

Frequency—cps	*Allowable Deviations*
25	+ 6, — 9.5 db
60	± 3 db
600	± 2 db
1000	± 2 db
3000	+ 4, — 5.5 db
8000	+ 6, — 9.5 db

The method of calibrating, set up in the *American Standard* Sound-Level Meters for Measurement of Noise and Other Sounds, Z24.3-1944, does not permit a sound-level meter response to be consistently high or low over the whole frequency range by the amounts given in the above table. However, deviations as large as these may occur over narrow frequency ranges. Therefore, it must be borne in mind that allowable differences of up to 6 db may occur in the readings of two meters, on a noise, the sound level of which is controlled by a single-frequency component, or a narrow band of components lying in the region of 60 to 1500 cps. Above or below this frequency region the difference might be greater. For very complex noises much smaller differences would occur, of the order of ± 2 db.

Sound-level meter readings should be representative of the levels existing under operating conditions. If the sound

level produced by a piece of apparatus is high near the apparatus, but is considerably attenuated under normal operating conditions at the place where relative quietness is desired, it may be desirable to make measurements at the latter place.

Because of the fact that sound-level meters are designed with three frequency response weightings for different loudness levels, it is frequently difficult on many low-frequency machinery noises to get consistent readings at changeover points. Therefore, machinery manufacturers have found it desirable, in many cases, to use only one weighting for their apparatus noise measurements. This weighting is specified in the specific test code applying to their apparatus and should be followed. When such specific codes are not available it is recommended that the 40-db weighting be used for sound levels up to about 55 db, 70-db weighting for sound levels from about 55 db to 85 db, and the flat weighting be used for higher levels. Where low-frequency noise predominates and large differences are observed between the results obtained using the 40-db and 70-db weightings, it is recommended that the 40-db weighting be used for sound levels up to about 45 db, 70-db weighting for sound levels from 65 db to 75 db, and flat weighting for sound levels above 90 db. For sound levels between 45 db and 65 db, obtained with 40-db and 70-db weightings, a more representative determination of the sound level can be obtained by averaging results obtained with these weightings. Similarly, for sound levels between 75 db and 90 db, obtained with the 70-db and flat weightings, more representative values can be obtained by averaging results obtained with these weightings.

The relation between loudness level and sound level as measured with a sound-level meter is quite complicated. For single-frequency tones, or noise in narrow frequency bands, the two types of levels would be numerically equal if the theoretically correct response curve were available in the sound-level meter, and are approximately equal if the averaging method described previously is used. For complex sounds the loudness levels in phons as judged by a sound jury will in general be numerically greater than the sound levels in db as measured by the sound-level meter. For moderately complex sounds in which the controlling energy at any particular level lies within two or three octaves, the difference will be in the order of 5 to 10 db, while for very complex noises in which components of approximately equal magnitude are rather uniformly spaced over the whole audible frequency range, the difference will be in the order of 5 to 15 db. In general, a moderate change in the level of sound, produced by amplification or attenuation, will produce a change in sound level which will approach very closely a corresponding change in loudness level in phons. This assumes that proper weightings are used in sound-level measurements.

CHAPTER 29

Recording and Reproducing Standards

NARTB Standards for mechanical, magnetic and optical recording and reproducing . . . A glossary of terms and definitions.

● The following standards and the glossary of terms and definitions, here reproduced as adopted by the Board of Directors of the NARTB (formerly NAB), supersede and replace the 1942 standards. This final version also replaced the proposed standards distributed March 28, 1949, as an Engineering supplement to NARTB Member Service. Organizations and manufacturers complying with these standards may identify their products with an appropriate expression, e.g., Compliance NARTB 1949 Standards. Graphs are included as a part of the text, particularizing specific standards for recording.

The NARTB Engineering Executive Committee and the Executive Committee of the NARTB Recording and Reproducing Standards Committee adopted the following standards from recommendations of the Recording and Reproducing Standards Committee's nine Project Groups. The Standards were presented to and adopted by the full Recording and Reproducing Standards Committee, and subsequently were formally adopted by the NARTB Board of Directors.

NARTB RECORDING AND REPRODUCING STANDARDS

Section 1

MECHANICAL RECORDING AND REPRODUCING STANDARDS

Turntable Speed (rpm)

1.05 It shall be standard that the average speed of the turntable be either 33⅓ or 78.26 rpm ±0.3%.

1.05.01 Method of Measurement: This measurement shall be made by means of a stroboscopic disc illumined by a neon lamp or equivalent operated from the same power source as the turntable. The stroboscopic disc for 33⅓ rpm speed measurement shall have 216 spots in 360°, and the stroboscopic disc for 78.26 rpm speed measurement shall have 92 spots in 360°.

At either 33⅓ or 78.26 rpm, not more than 21 dots per minute in either direction may pass or "drift" by a reference point.

Turntable and Disc Rotation

1.06 It shall be standard that disc records intended for broadcasting applica-

tion be rotated in a clockwise direction as viewed from the side being reproduced.

WOW Factor (Recording)

1.10 It shall be standard that the maximum instantaneous deviation from the mean speed of the recording turntable, when making the recording, shall not exceed ±0.1% of the mean speed.

WOW Factor (Reproducing)

1.11 It shall be standard that the instantaneous peak deviation from the mean speed of the reproducing turntable when reproducing shall not exceed ±0.2% of the mean speed.

Disc Reproducing System Rumble

1.12 It shall be a good engineering practice that the low frequency noise output of a turntable, its associated pickup and equalizer, when playing an essentially rumble-free silent groove, shall be more than 35 db below a reference level of 1.4 centimeters per second peak velocity at 100 cycles per second.

A record shall be considered rumble free if its rumble content is at least 8 db below that of the system being measured. The response of the pickup and equalizer shall conform to the NARTB standard reproducing curve; the amplifier and indicating meter shall have uniform response, within ±1 db, between 10 and 250 cycles per second, with 500 cycle response 3 db below the 100 cycle response, and attenuation at the rate of at least 12 db per octave at frequencies above 500 cycles. Amplifier and indicating meter response shall decrease at the rate of at least 6 db per octave below 10 cycles per second. The meter used shall have the same ballistic characteristics as the standard VU meter. If the meter reading fluctuates, both average and maximum values shall conform to this requirement.

1.12.01 This measurement is intended to give a measure of the electrical effect of the low-frequency noise output of a turntable-pickup combination. Since the result depends on the equalizer and pickup characteristics as much as on the turntable itself, it is not feasible to standardize the turntable alone.

The measurement reflects the electrical effect, not the aural annoyance value, of low-frequency noise. It has been found that strong low-frequency noise at a frequency and intensity below audibility will create severe intermodulation distortion in an audio system, and that in modern systems with extended low-frequency response, this is more serious than the audibility of the low frequency.

The reference level of 1.4 centimeters per second at 100 cps corresponds in amplitude to 7 centimeters per second at 500 cps, since we are then operating on the constant amplitude portion of the recording characteristic. It is suggested that such noise data be taken periodically for each turntable in a broadcast system, with a change in the indication reflecting a need for maintenance work.

Turntable Recovery Time (Reproducing)

1.15 It shall be standard that the maximum turntable recovery time be 0.3 seconds.

1.15.01 Recovery time shall be defined as the time required after release of a record which has been restrained from rotation until the wows have fallen to 120% of the permissible steady state level.

Turntable Height (Reproducing)

1.20 It shall be good engineering practice that the height of the turntable be 28 inches.

1.20.01 The height of a turntable of the console type is defined as "the vertical distance from the surface on which the turntable rests to the top of the platen."

Turntable Platen (Reproducing)

1.21 It shall be good engineering practice that the diameter of the transcription reproducing turntable platen be substantially the same as that of the largest diameter records for which the turntable is intended.

Turntable Center Pin Diameter

1.25 It shall be standard that the diameter of the center pin of a transcription turntable be 0.2835″ ±0.0005″.

Outer Record Diameters

1.30 It shall be standard that the outer record diameter fall within the limits specified in the following table:

Nominal	*Finished Records (Pressings or Instantaneous)*
16″	$15\frac{15}{16}'' \pm \frac{3}{32}''$
12″	$11\frac{7}{8}'' \pm \frac{1}{32}''$
10″	$9\frac{7}{8}'' \pm \frac{1}{32}''$

Record Center Hole Diameter

1.35 It shall be standard that the record center hole diameter be 0.286″ ±0.001″.

Concentricity of Center Hole

1.36 It shall be good engineering practice that the record center hole be concentric with the recorded groove spiral within 0.002 inches.

Record Warp

1.40 It shall be standard that the maximum departure of the surface of a record from a true plane because of warping shall not be in excess of 1/16″.

Recording Grooves Per Inch

1.45 It shall be good engineering practice to use numbers of grooves per inch in recording as follows: 96—104—112—120—128—136—etc., in increments of eight. (Tolerance ±2 grooves per inch.)

Frequency Characteristics for Vertical Recordings[1]

1.50 It shall be standard that the recorded frequency characteristics on vertically recorded records be as shown in attached Fig. 1.

Frequency Characteristics for Lateral Recordings[1]

1.55 It shall be standard that the recorded frequency characteristics on laterally recorded records be as shown in attached Fig. 2.

[1]The recording characteristics for lateral and vertical transcriptions remain as specified in the standards adopted in March 1942, except that in place of "stylus velocity" the words "recorded velocity" should be substituted.

Record Groove Shape[2]

1.60 Lateral: It shall be standard that the groove shape for finished lateral records shall have an included angle of 88° ±5°; a radius of 1.5 mils maximum; and a top width of not less than 4.0 mils.

1.60.01 It is recommended that in view of the trend toward smaller reproducer styli, the lateral groove radius should preferably be smaller than 1.5 mils.

1.65 Vertical: It shall be standard that the groove shape for finished vertical records shall have an included angle of 88° ±5°; a radius of 2.0 to 2.3 mils; and a top width of not less than 4.0 mils.

Reproducer Stylus Contour

1.70 Lateral or vertical transcriptions: It shall be the primary standard that the stylus for reproducing lateral or vertical transcriptions shall have an included angle of 40° to 55° and a bottom radius of 2.0 ±0.1 mils.

1.70.01 The primary standard provides optimum technical performance in reproducing lateral or vertical transcriptions.

1.75 Lateral 78 rpm phonograph records and transcriptions: It shall be the secondary standard that the stylus for reproducing lateral 78 rpm phonograph records and transcriptions shall have an included angle of 40° to 55° and a bottom radius of 2.5 ±0.1 mils.

1.75.01 The secondary standard provides a compromise design suitable for reproduction of both lateral transcriptions and 78 rpm phonograph records.

[2]It has been concluded that groove shape standards should apply to the finished record rather than to the recording stylus. It is recognized that in some cases record groove dimensions depart slightly from those of the recording stylus, but such deviations should be anticipated in the recording operation and controlled in the processing plant. In actual practice standards covering reproducer stylus contour have no significance unless the groove standards refer to the finished record.

Recorded Level (Lateral and Vertical)[3]

1.80 It shall be standard that the recorded program level shall produce the same reference deflection on a standard volume indicator (ASA Standard C16.5-1942) as that produced by a 1,000-cycle tone recorded at a peak velocity of 7 cm per second.

Signal-to-Noise Ratio[4]

1.85 It shall be standard that the noise level measured with a standard volume indicator (ASA Standard C16.5-1942) when reproducing a record on a flat velocity basis over a frequency range between 500 and 10,000 cycles per second shall be at least 40 db below the level obtained under the same conditions of reproduction using a tone record of 1000 cycles per second having a peak velocity of 7 centimeters per second. Response of the system at 500 cycles per second shall be 3 db below the response at 1000 cycles per second, and the response shall fall at the rate of at least 12 db per octave below 500 cycles per second. Response of the system at 10,000 cycles per second shall be 3 db below the response at 1000 cycles per second, and the response shall fall at the rate of at least 12 db per octave above 10,000 cycles per second.

NARTB Lateral Frequency Record

1.86 It shall be standard that a lateral frequency record for the purpose of facilitating the measurements of disc reproducing equipment shall be in accordance with the specifications as set forth in 1.86.01.

1.86.01 Specifications for NARTB Lateral Frequency Record:

A. **Physical Characteristics.** The pressing shall be of unfilled vinyl, of nominal 12″ diameter, 33⅓ rpm, outside-in recording, with other specifications such as center-hole diameter, concentricity, pressing thickness, and flatness, to meet NARTB Recording Standards.

B. **Groove Contour of Finished Pressing.** The bottom radius of the grooves shall not exceed 0.5 mils. Groove width shall be 6.5 ± .5 mils. The included angle shall be not less than 83°, nor greater than 90°. The grooves per inch shall be 96.

C. **Recording Level.** The normal recording level, representing the "zero" point to which the various tone bands are referred, shall be in accordance with NARTB Standard 1.80 which specifies a level of 7 cm per second.

D. **Frequency Characteristic.** The recorded characteristic shall be constant velocity above, and constant amplitude below the crossover frequency. The roll-off characteristic in the vicinity of the crossover frequency shall correspond to that speci-

[3]It is well established that at least a 10 db margin is required between the sine wave load handling capacity of a system and the level of program material measured by a standard volume indicator. This standard would then contemplate program peaks running as high as a velocity of 21 centimeters per second. This is believed to be approximately the maximum velocity which can be traced without excessive distortion at groove speeds encountered at the inner radius of 33⅓ rpm disc. This has also been substantiated by practical experience. This standard of course applies to both lateral and vertical recording.

[4]This measurement is intended to give a measure of noise in terms of a fixed reference. In this way it becomes a true figure of merit for comparisons of variations in surface noise of discs. It does not, however, take into account the program level which may happen to be recorded on a particular disc nor the dynamic range of the program material. NARTB preemphasis will improve the signal-to-noise ratio by approximately 8 db, thus resulting in an effective signal-to-noise ratio under minimum conditions of 48 db. It should be remembered that the peak signal-to-noise ratio will be at least 10 db. better than the figure given above when the NARTB standard of recorded level is used, with normal program material.

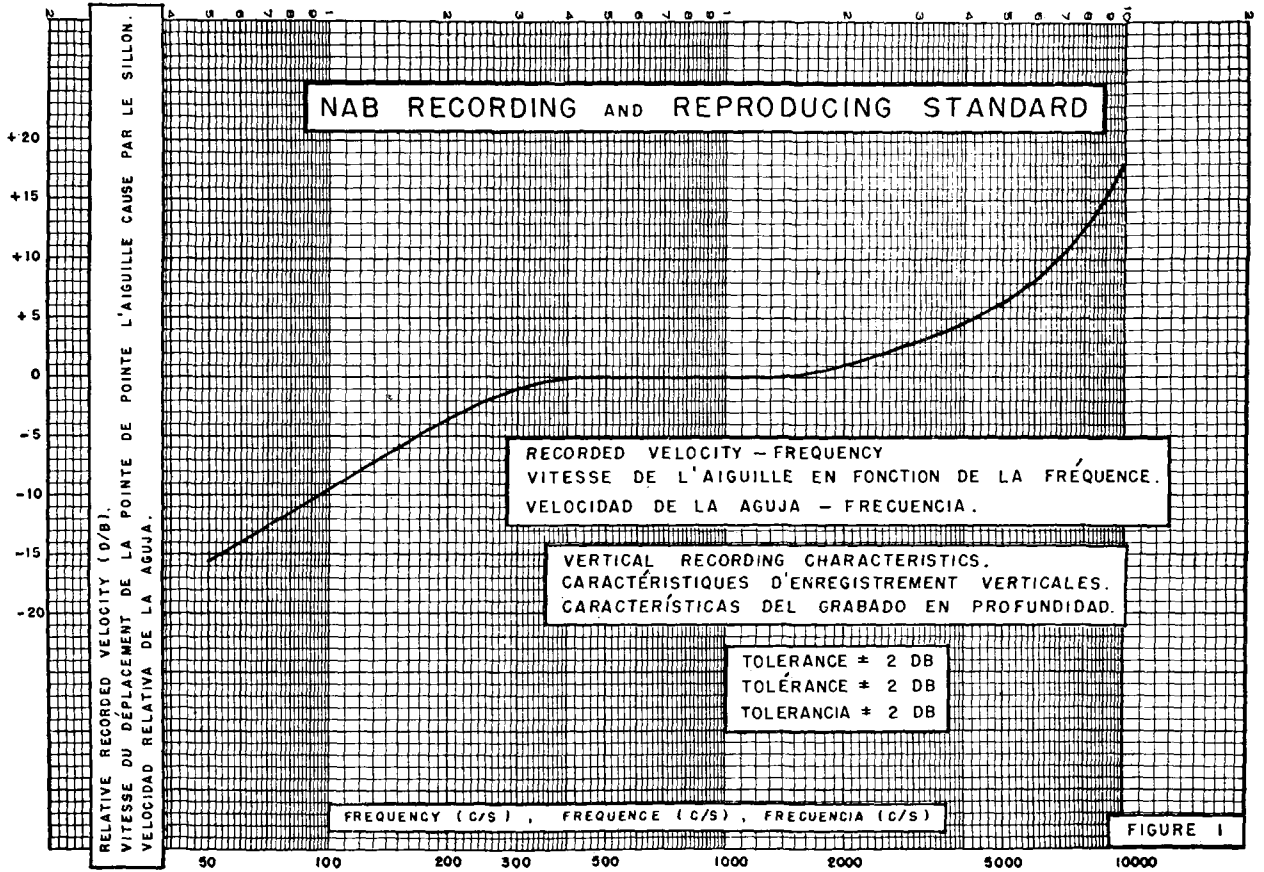

FIGURE 1

Fig. 1

APRIL 1949

fied in Standard 1.55 for the NARTB lateral recording characteristic. The relative velocity values, expressed in db, are completely specified in a section which follows—namely "Recorded Frequencies—Band 2—Test Frequencies." The permissible tolerance is ±0.5 db.

The above characteristics and tolerances shall apply to initial test pressings. A wider high frequency tolerance is acceptable for regular pressings. The increased tolerance shall be determined by the upper flat limit of +½ db and a lower limit consisting of a straight line starting from the lower tolerance of —½ db at 5,000 cps and extending to a point —2½ db at 12,000 cps.

E. **Symmetry of Reflected Light Pattern.** The width of the Buchmann-Meyer light pattern on each side of the center line of the pattern shall be alike within 10%.

F. **Recorded Frequencies:**

Band 1—Intermodulation Test Tones. Starting at 11½" diameter, 7,000 cps shall be recorded at a level of —14 db for approximately 5 seconds or 3 revolutions, and 100 cps at —2 db, shall be added producing a test signal of two tones suitable for intermodulation measurements. The combined tones shall be recorded for approximately 12 seconds or 7 revolutions. The signal shall then be removed and the groove closed.

Band 2—Test Frequencies. Starting at 11" diameter, 12,000 cps shall be recorded for about 3 grooves, or approximately 5 seconds, followed by 10,000 cps and the other frequencies listed below with about 2 unmodulated grooves, approximately 4 seconds, between each recorded frequency. The 1,000 cps recorded band, however, shall have a duration of about 6 grooves, or approximately 10 seconds.

Between 6,000 and 5,000 cps, and also between 2,000 and 1,000 cps, the lead screw speed shall be increased momentarily, cutting a slight spiral to serve as a visual indication of the location of 5,000 and 1,000 cps bands.

The frequency accuracy shall correct within ±2%. The following frequencies shall be recorded at the relative levels indicated.

Frequency	*Relative Velocity of Stylus in db*
12,000 Approx. 5 sec.	0
10,000	0
9,000	0
8,000	0
7,000	0
6,000	0
Slight Spiral	
5,000	0
4,000	0
3,000	0
2,000	0
Slight Spiral	
1,000 Approx. 10 sec.	0 (7 cm/sec)
700	— .7
400	—3.0
300	—5.0
200	—8.0
100	—14.0
70	—17.0
50	—20.0
30	—24.0

Band 3—Starting at a diameter of 8 inches, 8,000 cps, shall be recorded at a level of —10 db for approximately 5 grooves or about 9.0 seconds. The signal shall then be removed and the groove closed. The purpose of this band is to permit a measurement of translation loss.

Band 4—Intermodulation Test Tones. Same as Band 1, except starting diameter shall be 7.75 inches.

Band 5—Intermodulation Test Tones. Same as Band 1, except starting diameter shall be 6.75 inches.

G. **Noise.** The surface noise shall be in accordance with NARTB Standard 1.85. The low frequency noise content of this record shall be at least 30 db below the level of the 1,000 cps reference tone, as measured through a system containing a 500 cps low

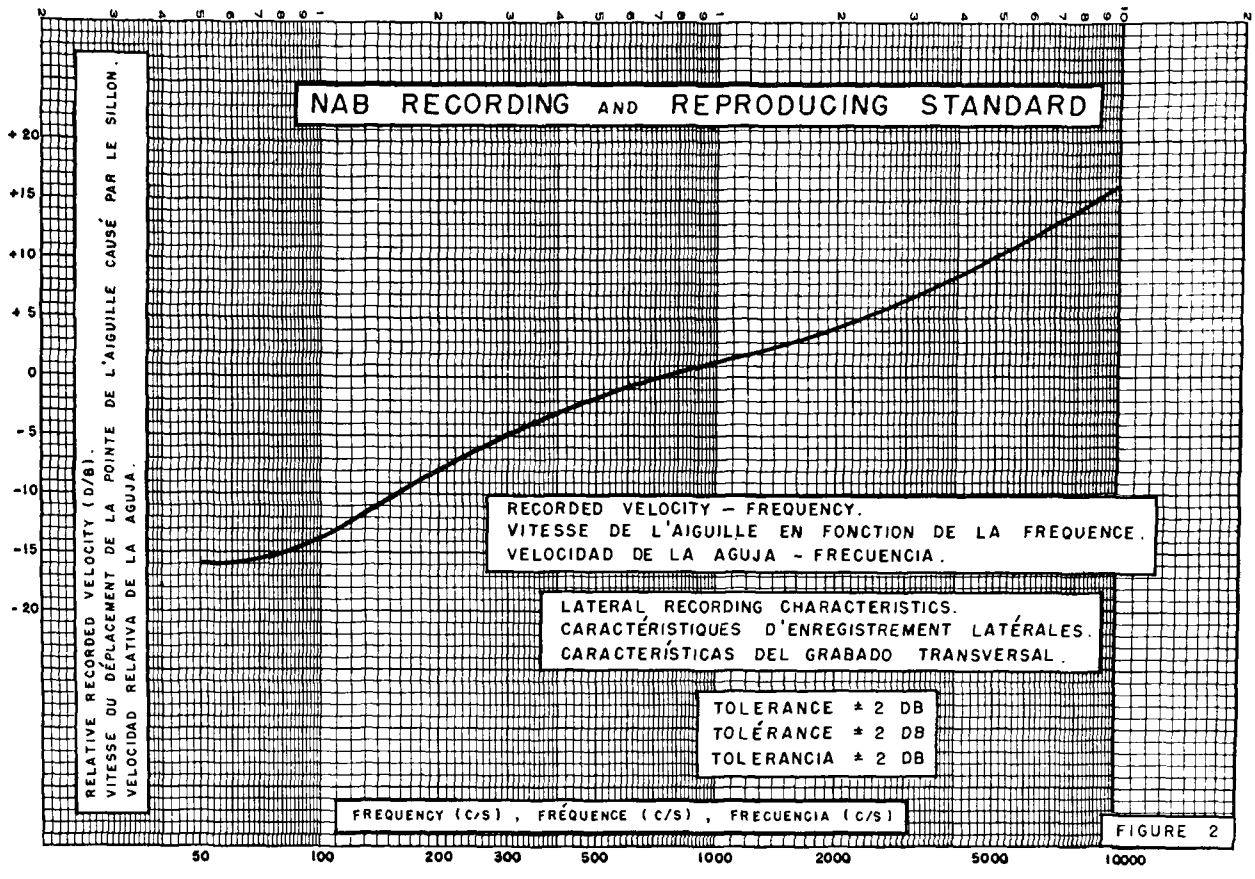
NAB RECORDING AND REPRODUCING STANDARD
RELATIVE RECORDED VELOCITY (D/B).
VITESSE DU DÉPLACEMENT DE LA POINTE DE L'AIGUILLE CAUSÉ PAR LE SILLON.
VELOCIDAD RELATIVA DE LA AGUJA.
+20
+15
+10
+5
0
-5
-10
-15
-20
RECORDED VELOCITY – FREQUENCY.
VITESSE DE L'AIGUILLE EN FONCTION DE LA FREQUENCE.
VELOCIDAD DE LA AGUJA - FRECUENCIA.
LATERAL RECORDING CHARACTERISTICS.
CARACTÉRISTIQUES D'ENREGISTREMENT LATÉRALES.
CARACTERÍSTICAS DEL GRABADO TRANSVERSAL.
TOLERANCE ± 2 DB
TOLÉRANCE ± 2 DB
TOLERANCIA ± 2 DB
FREQUENCY (C/S), FRÉQUENCE (C/S), FRECUENCIA (C/S)
50
100
200
300
500
1000
2000
5000
10000
FIGURE 2
APRIL 1949

Fig. 2

pass filter. The response characteristics of this system when using the tone record as the signal source shall be flat ±1 db from 500 to 60 cps.

H. **Distortion.** Reproduction of the recorded intermodulation tones of bands 1, 4 or 5 of any acceptable pressing, when using a pickup of negligible distortion and having a stylus tip which conforms to NARTB Standard 1.70, shall not exceed 2% on band 1, 3% on band 4, or 5% on band 5.

I. **Label Information.** The label shall contain the following information:

Outermost Groove Diameter

1.90 It shall be standard that the diameter of the outermost groove be within the limits specified in the following table:

16″—outside start — 15½″ ± $\frac{1}{16}$″
16″—inside start — 15$\frac{9}{16}$″ maximum
12″—outside start — 11½″ ± 0.020″
10″—outside start — 9½″ ± 0.020″

Starting Spiral Grooves Per Inch

1.95 It shall be good engineering practice in recordings having a starting spiral to use a rate of eight grooves per inch for the spiral. (Tolerance ± 2 grooves per inch.)

Number of Blank Grooves

1.100 It shall be standard that the number of blank grooves, before modulation occurs, shall be not less than two complete revolutions nor more than four, exclusive of any starting spiral.

NARTB
LATERAL FREQUENCY RECORD No. 1
12,000 to 30 cps, 33⅓ rpm

Band 1	100 cps 100 and 7,000 cps
Band 2	12,000 to 30 cps (See below)
Band 3	8,000 cps —10 db
Band 4	100 cps 100 and 7,000 cps
Band 5	100 cps 100 and 7,000 cps

BAND 2

Freq.	Level	Calib.	Freq.	Level	Calib.
12,000	0, +.5 —2.5		1,000	0, ±.5	
10,000	0, +.5 —2.2		700	—.7, ±.5	
9,000	0, +.5 —1.8		400	—3.0, ±.5	
8,000	0, +.5 —1.6		300	—5.0, ±.5	
7,000	0, +.5 —1.3		200	—8.0, ±.5	
6,000	0, +.5 — .9		100	—14.0, ±.5	
5,000	0, ±.5		70	—17.0, ±.5	
4,000	0, ±.5		50	—20.0, ±.5	
3,000	0, ±.5		30	—24.3, ±.5	
2,000	0, ±.5				

Label 6 inches in diameter

When pressings are individually calibrated, the printed tolerance under the heading of "Level" shall be crossed out and the correction written in the column titled "Calib."

The manufacturer shall include his name on the label and shall emboss suitable factory identification codings on the pressing.

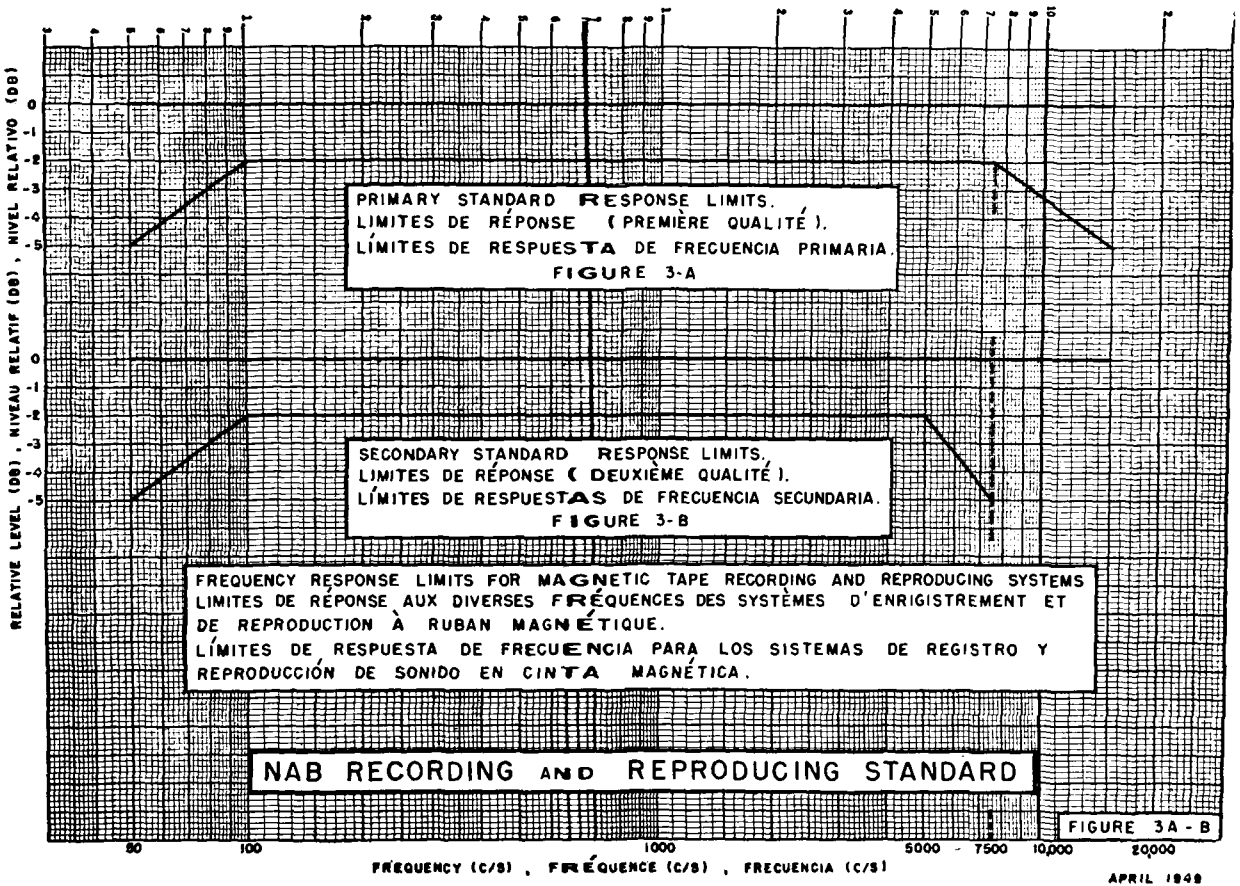
RELATIVE LEVEL (DB) , NIVEAU RELATIF (DB) , NIVEL RELATIVO (DB)
0
-1
-2
-3
-4
-5
PRIMARY STANDARD RESPONSE LIMITS.
LIMITES DE RÉPONSE (PREMIÈRE QUALITÉ).
LÍMITES DE RESPUESTA DE FRECUENCIA PRIMARIA.
FIGURE 3-A
SECONDARY STANDARD RESPONSE LIMITS.
LIMITES DE RÉPONSE (DEUXIÈME QUALITÉ).
LÍMITES DE RESPUESTAS DE FRECUENCIA SECUNDARIA.
FIGURE 3-B
FREQUENCY RESPONSE LIMITS FOR MAGNETIC TAPE RECORDING AND REPRODUCING SYSTEMS
LIMITES DE RÉPONSE AUX DIVERSES FRÉQUENCES DES SYSTÈMES D'ENRIGISTREMENT ET DE REPRODUCTION À RUBAN MAGNÉTIQUE.
LÍMITES DE RESPUESTA DE FRECUENCIA PARA LOS SISTEMAS DE REGISTRO Y REPRODUCCIÓN DE SONIDO EN CINTA MAGNÉTICA.
NAB RECORDING AND REPRODUCING STANDARD
FIGURE 3A - B
50
100
1000
5000
7500
10,000
20,000
FREQUENCY (C/S) , FRÉQUENCE (C/S) , FRECUENCIA (C/S)
APRIL 1949

Fig. 3A-3B

Uniformity of Groove Spacing

1.105 It shall be standard that the recorded grooves on a record shall be so spaced that at no point (except the concentric stopping groove) does the pitch deviate from the mean groove pitch by more than 5 per cent.

Stopping Groove

1.110 It shall be standard that at the termination of the recording groove spiral a locked concentric stopping groove shall be provided.

Innermost Groove Diameter

1.115 It shall be standard that the diameter of the innermost groove shall be not less than 7½″ in the case of 33⅓ rpm records and not less than 3¾″ in the case of 78 rpm records.

Minimum Label Information

1.120 It shall be standard for the label of a recording to contain at least the following technical information:

a. Type of recording—vertical or lateral
b. Speed—78.26 or 33⅓ rpm
c. Direction of feed (start)—outside-in or inside-out
d. Recording frequency characteristic

Section 2

MAGNETIC RECORDING AND REPRODUCING STANDARDS

Magnetic Tape Dimensions

2.05 Thickness: It shall be standard that the thickness of magnetic tape shall not exceed 0.0022 inches.

2.10 Width: It shall be standard that the width of magnetic tape shall not exceed 0.250 inches nor shall it be less than 0.244 inches.

Magnetic Tape Speed

Definition: Magnetic tape speed for recording and reproducing is the velocity of the magnetic tape recording medium with respect to the recording or reproducing device.

2.15 Primary standard: It shall be standard that the primary standard magnetic tape speed shall be 15 inches per second.

2.20 Secondary standard: It shall be standard that the secondary magnetic tape speed shall be 7.5 inches per second.

2.25 Supplementary standard: It shall be standard that the supplementary magnetic tape speed shall be 30 inches per second.

Frequency Response Limits

2.30 Primary Frequency Response Limits: It shall be standard that the primary frequency response shall lie between two limits. (See Fig. 3-A.) The upper of these limits shall be uniform from 50 to 15,000 cps. The lower shall be uniform from 100 to 7500 cps and 2 db below the upper limit. In addition, the lower limit shall be an additional amount down at 50 and 15,000 cps determined by decrease at a uniform rate of 3 db per octave below 100 cps and above 7500 cps.

2.35 Secondary Frequency Response Limits: (For applications where a restricted frequency response may be tolerated). It shall be standard that the secondary frequency response shall lie between two limits. (See Fig. 3-B.) The upper of these limits shall be uniform from 50 to 7500 cps. The lower shall be uniform from 100 to 5000 cps and 2 db below the upper limit. In addition, the lower limit shall be an additional amount down at 50 and 7500 cps determined by a uniform 3 db decrease from 100 to 50 cycles and from 5000 to 7500 cycles.

Flutter and Wow

2.40 It shall be standard that the instantaneous peak flutter and wow shall not exceed 0.2% (peak to peak 0.4%) when recording and reproducing on the same equipment

Magnetic

Magnetic Tape Reel

2.45 It shall be standard that the hub carrying magnetic tape shall be in accordance with Fig. 4.

Primary Standard

2.50 It shall be standard where flanges are used that the primary stand-

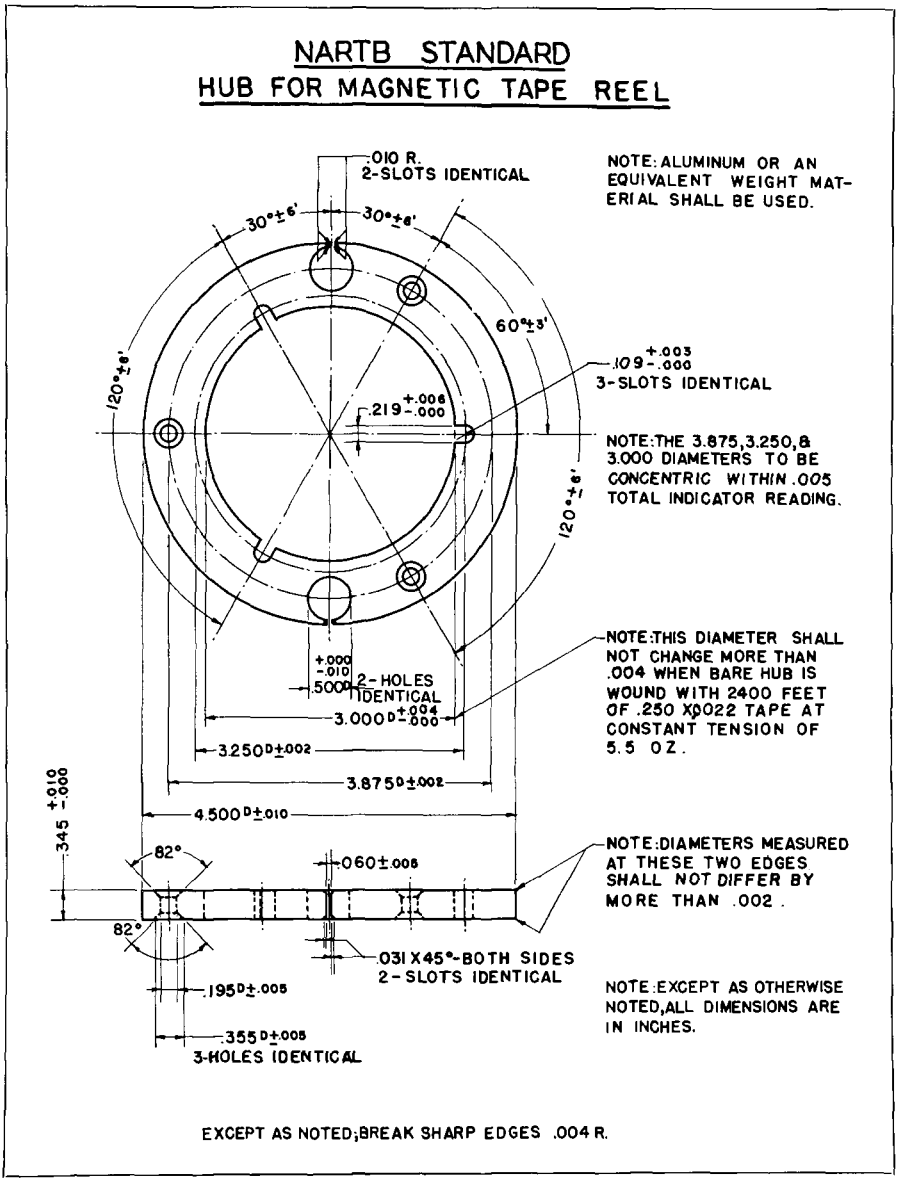

Fig. 4

ard flange shall be in accordance with Fig. 5.

2.50.01 The primary standard flange provides for the accommodation of sufficient magnetic tape of standard thickness for a nominal 30 minutes of recording.

Erasing Function

2.55 It shall be standard that the erasing function shall be applied to the entire width of the tape.

Magnetic Tape Length

2.60 Length—Primary Standard: It

shall be standard that the primary standard length of magnetic tape shall be 2,400 feet, + 50 feet — 0 feet.

2.60.01 The primary standard length of magnetic tape provides the nominal amount of maximum thickness magnetic tape for the primary standard flange as well as a nominal recording time of 30 minutes (plus a starting and stopping margin) when recording with the primary standard magnetic tape speed.

2.65 Length—Secondary Standard: It shall be standard that the secondary standard length of magnetic tape shall be 1200 feet, + 25 feet — 0 feet.

2.65.01 The secondary standard length of magnetic tape provides a nominal recording time of 30 minutes (plus a starting and stopping margin) when recording with the secondary standard magnetic tape speed.

Magnetic Reproducing System Frequency Response

2.70 It shall be good engineering practice that the deviation from a flat frequency response of a magnetic tape reproducing system when reproducing an NARTB Reference Tape shall not exceed ±1 db.

NARTB Reference Tape

2.71 Definition: An NARTB Reference Tape is a tape, the specifications for which are given in 2.71.01.[1]

2.71.01 Specifications for NARTB Reference Tape: The reference tape shall be recorded with the specifications shown in Fig. 6.

[1]The NARTB reference tape is to be made on only one specific machine designed in accordance with NARTB Standards and under the immediate control and supervision of a committee especially designated by the NARTB including a representative of the NARTB Department of Engineering. Tapes will be numbered and registered by the NARTB and available to manufacturers or broadcasters at a nominal cost. (It is not anticipated that such tapes will be available for several months pending arrangements for making such tapes.)

Each tape to be used as reference tape should, prior to the recording the frequency band, be subject to a uniformity test at 1,000 cps which should be recorded and thereafter played back. In reproduction of the signal levels, variations should not exceed ±½ db. Flexibility and surface smoothness should be compared to that of a special tape which is maintained by NARTB under controlled conditions. Such reference tape should never be exposed to tension in excess of 8 oz. Ambient relative humidity should fall between 40 to 55%. Ambient temperature should fall between 60° and 70° F. The tape should be wound on a standard hub. Preferably, both use and storage of the reference tape should be under the above conditions.

Magnetic Sound Track Position

2.75 It shall be standard that the magnetic sound track shall be symmetrically located with respect to the center line of the tape.

Section 4

GLOSSARY OF MECHANICAL, MAGNETIC AND OPTICAL TERMS AND DEFINITIONS

Acetate Discs

4.005 Acetate discs are mechanical recording discs, either solid or laminated, which are made of various acetate compounds.

Advance Ball

4.010 An advance ball is a rounded support (often sapphire) attached to a cutter which rides on the surface of the recording medium so as to maintain a uniform mean depth of cut and correct for small irregularities of the disc surface.

Aeolight

4.015 An aeolight is a glow lamp employing a cold cathode and a mixture of permanent gases in which the intensity of illumination varies with the applied signal voltage.

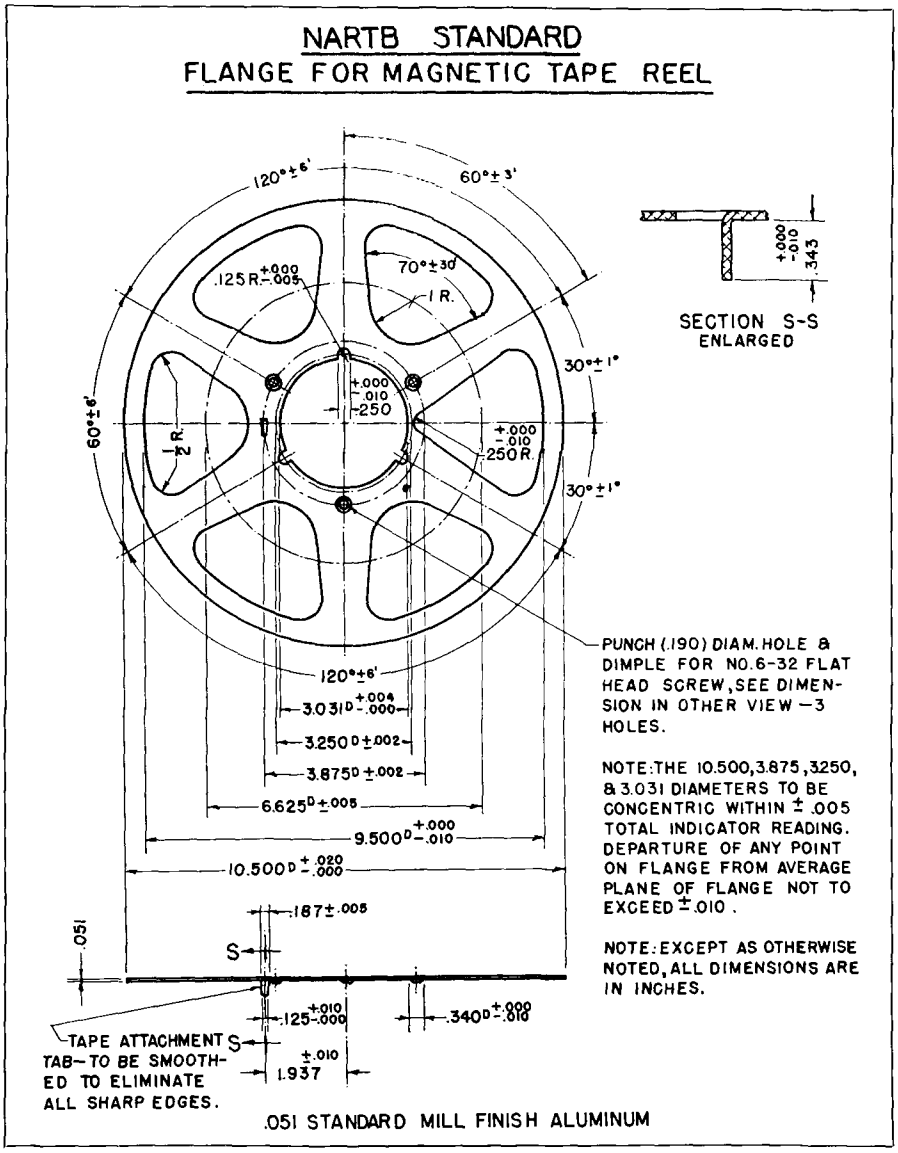

Fig. 5

Background Noise

4.020 Background noise is the total system noise independent of whether or not a signal is present. The signal is not to be included as part of the noise.

Bilateral-Area Track

4.025 A bilateral-area track is a sound track having the two edges of the central area modulated according to the signal.

Binder

4.030 A binder is a resinous material which causes the various materials of a record compound to adhere to one another.

(Biscuit)—See PREFORM (BISCUIT)

Burnishing Surface

4.035 A burnishing surface, in mechanical recording, is the portion of the cutting stylus directly behind the cutting edge which smooths the groove.

(Cathode Sputtering)—See SPUTTERING

(Cellulose Nitrate Discs)—See LACQUER DISCS

Chip

4.040 The chip, in mechanical recording, is the material removed from the recording medium by the recording stylus while cutting the groove.

(Christmas Tree Pattern)—See OPTICAL PATTERN

(Coated Tape)—See MAGNETIC POWDER-COATED TAPE

(Concentric Groove)—See GROOVE, LOCKED

Constant-Amplitude Recording

4.045 Constant amplitude recording indicates a mechanical recording characteristic wherein, for a fixed amplitude of a sinusoidal signal, the resulting recorded amplitude is independent of frequency.

Constant-Velocity Recording

4.050 Constant-velocity recording indicates a mechanical recording characteristic wherein, for a fixed amplitude of a sinusoidal signal, the resulting recorded amplitude is inversely proportional to the frequency.

Control Track

4.055 A control track is a supplementary sound track, usually placed on the same film with the sound track carrying the program material. Its purpose is to control, in some respect, the reproduction of the sound track. Ordinarily, it contains one or more tones, each of which may be modulated either as to amplitude or frequency.

Core

4.060 A core, in mechanical recording, is the center layer or basic support of certain types of laminated media.

(Crossover Frequency)—See TRANSITION FREQUENCY

(Crosstalk)—See MAGNETIC PRINTING

Crystal Cutter

4.065 A crystal cutter is a cutter in which the mechanical displacements of the recording stylus are derived from the deformations of a crystal having piezoelectric properties.

Cutter (Mechanical Recording Head)

4.070 A cutter is an electromechanical transducer which transforms an electric input into a mechanical output, typified by mechanical motions which may be inscribed into a recording medium by a cutting stylus.

(De-Emphasis)—See POSTEMPHASIS

Densitometer

4.075 A densitometer is an instrument for the measurement of optical density (photographic transmission, photographic reflection, visual transmission, etc.) of a material.

Disc Recorder

4.080 A disc recorder is a mechanical recorder in which the recording medium has the geometry of a disc.

(Drift)—See FLUTTER

Drive Pin

4.085 A drive pin, in disc recording, is a pin similar to the center pin, but located to one side thereof, which is used to prevent a disc record from slipping on the turntable.

Drive-Pin Hole

4.090 A drive-pin hole, in disc recording, is a hole in a disc recording which accommodates the turntable drive pin.

Dubbing

4.095 Dubbing is a term used to describe the combining of two or more sources of sound into a complete recording, at least one of the sources being a recording. (See RE-RECORDING)

(Dynamic Reproducer)—See PICKUP, MOVING COIL

(Eccentric Circle)—See GROOVE, ECCENTRIC

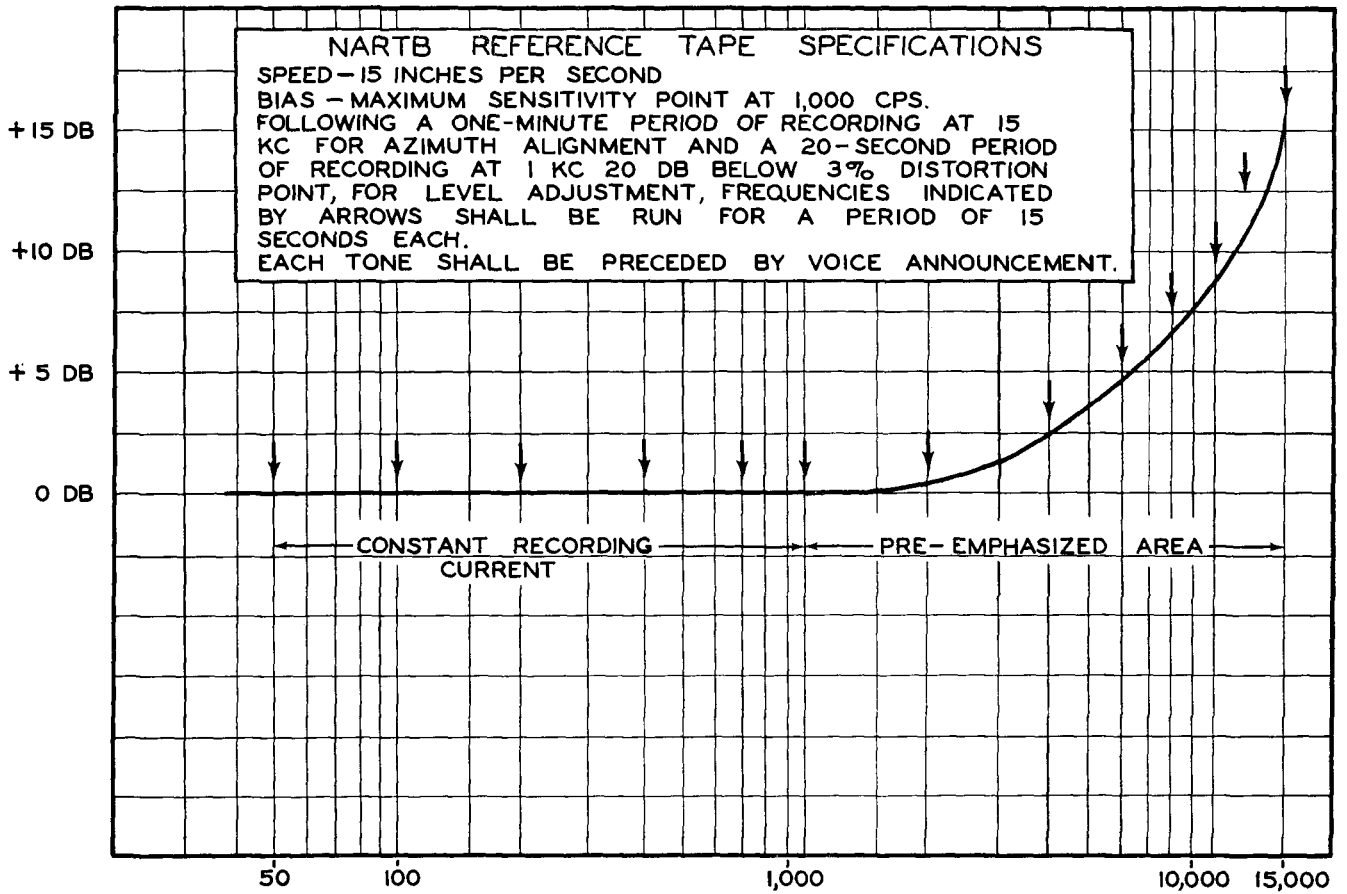
NARTB REFERENCE TAPE SPECIFICATIONS
SPEED – 15 INCHES PER SECOND
BIAS – MAXIMUM SENSITIVITY POINT AT 1,000 CPS.
FOLLOWING A ONE-MINUTE PERIOD OF RECORDING AT 15 KC FOR AZIMUTH ALIGNMENT AND A 20-SECOND PERIOD OF RECORDING AT 1 KC 20 DB BELOW 3% DISTORTION POINT, FOR LEVEL ADJUSTMENT, FREQUENCIES INDICATED BY ARROWS SHALL BE RUN FOR A PERIOD OF 15 SECONDS EACH.
EACH TONE SHALL BE PRECEDED BY VOICE ANNOUNCEMENT.
+15 DB
+10 DB
+5 DB
0 DB
CONSTANT RECORDING CURRENT
PRE-EMPHASIZED AREA
50
100
1,000
10,000
15,000

Fig. 6

Eccentricity

4.100 Eccentricity, in disc recording, is the displacement of the center of the recording groove spiral, with respect to the record center hole.

Equalization (Corrective Equalization)

4.105 Equalization is the effect of all corrective means employed in the recording and reproducing process to obtain a desired over-all frequency response.

Erasing Head

4.110 An erasing head is a device for obliterating any previous recordings. It may be used for preconditioning the magnetic media for recording purposes.

Erasing Head, A-C

4.115 An a-c erasing head is a magnetic head which uses alternating current to produce the magnetic field necessary for erasing.

NOTE: A-c erasing is achieved by subjecting the medium to a number of cycles of a magnetic field of a decreasing magnitude. The medium is, therefore, essentially magnetically neutralized.

Erasing Head, D-C

4.120 A d-c erasing head is a magnetic head which utilizes direct current to produce the magnetic field necessary for erasing.

NOTE: D-c erasing is achieved by subjecting the medium to a unidirectional field. Such a medium is, therefore, in a different magnetic state than one erased by a-c.

Erasing Head, P-M

4.125 A p-m erasing head uses the fields of one or more permanent magnets for erasing.

Fast Groove (Fast Spiral)

4.130 A fast groove, in disc recording, is an unmodulated spiral groove having a pitch that is much greater than that of the recorded grooves.

Filler

4.135 Filler, in mechanical recording, is the insert material of a record compound as distinguished from the binder.

Film Reproducer

4.140 A film reproducer is an instrument in which film is the medium from which a recording is reproduced.

NOTE: In many cases, the term "film reproducer" is erroneously used synonymously with optical sound reproducer.

Film Sound Recorder

4.145 A film sound recorder is equipment which uses film as the recording medium.

NOTE: In many cases, the term "film sound recorder" is erroneously used synonymously with optical sound recorder.

Flutter (WOW) (Drift)

4.150 In recording and reproducing, flutter is the deviation of frequency which results in general from irregular motion during recording, duplication, or reproduction.

NOTE: The term "flutter" usually refers to cyclic deviations occurring at a relatively high rate, as for example, 10 cycles per second. The term "wow" usually refers to cyclic deviations occurring at a relatively low rate, as for example, a once-per-revolution speed variation of a phonograph turntable. The term "drift" usually refers to a random rate close to zero cycles per second.

Flutter Rate

4.155 Flutter rate is the number of cyclical variations per second of the flutter.

(Frequency — Crossover-Transition-Turnover) —

See TRANSITION, FREQUENCY

Frequency Record

4.160 A frequency record is a recording of various known frequencies at known amplitudes, usually for the purposes of testing or measuring.

Galvanometer Recorder (For Photographic Recording)

4.165 A galvanometer recorder for photographic recording is a combination of mirror and coil suspended in a magnetic field. The application of a signal voltage to the coil causes a reflected light beam from the mirror to pass across a slit in front of a moving pho-

tographic film, thus providing a photographic record of the signal.

Gamma

4.170 The gamma of a photographic material is the slope of the straight line portion of the H and D curve. It represents the rate of change of photographic density with the logarithm of exposure. Gamma is a measure of the contrast properties of the film. Both gamma and density specifications are commonly used as controls in the processing of photographic film.

Gap Length

4.175 In longitudinal magnetic recording, the gap length is the physical distance between adjacent surfaces of the poles of a magnetic head. (See MAGNETIC HEAD.)

NOTE: The effective gap length is usually greater than the physical length and can be experimentally determined in some cases.

Grain

4.180 A grain of photographic material is a small particle of metallic silver remaining in a photographic emulsion after development and fixing. In the agglomerate, these grains form the dark area of a photographic image.

Graininess

4.185 Graininess of a photographic material is the visible coarseness under specified conditions due to silver grains in a developed photographic film.

Groove

4.190 A groove, in mechanical recording, is the track inscribed in the record by the cutting or embossing stylus, including undulations of modulations caused by the vibration of the stylus.

Groove Angle

4.195 Groove angle, in disc recording, is the angle between the two walls of an unmodulated groove in a radial plane perpendicular to the surface of the recording medium.

Groove, Eccentric (Eccentric Circle)

4.200 An eccentric groove, in disc recording, is an unmodulated locked groove whose center is other than that of the disc record (generally used in connection with mechanical control of phonographs).

Groove, Fast (Fast Spiral)

4.205 A fast groove in disc recording is an unmodulated spiral groove having a pitch that is much greater than that of the recorded grooves.

Groove, Lead-In (Lead-In Spiral)

4.210 A lead-in groove, in disc recording, is a blank spiral groove at the beginning of a record generally having a pitch that is much greater than that of the recorded grooves.

Groove, Lead-Over (Crossover Spiral)

4.215 A lead-over groove, in disc recording, is a groove cut between recordings of small durations which enables the pickup stylus to travel from one cut to the next.

Groove, Lead-Out (Throw-Out Spiral)

4.220 A lead-out groove, in disc recording, is a blank spiral groove at the end of a recording generally of a pitch that is much greater than that of the recorded grooves and which is connected to either the locked or eccentric groove.

Groove, Locked (Concentric Groove)

4.225 A locked groove, in disc recording, is a blank and continuous groove at the end of modulated grooves whose function is to prevent further travel of the pickup.

Groove Shape

4.230 Groove shape, in disc recording, is the contour of the groove in a radial plane perpendicular to the surface of the recording medium.

Groove Speed

4.235 Groove speed, in disc recording, is the linear speed of the groove with respect to the stylus.

Groove, Unmodulated

4.240 An unmodulated groove, in mechanical recording, is a groove made in the medium with no signal applied to the cutter.

Ground Noise

4.245 Ground noise is the residual system noise in the absence of the signal. It is usually caused by inhomogeneity in the recording and reproducing media, but may also include amplifier noise such as tube noise or noise generated in resistive elements in the input of the reproducer amplifier system.

Grouping

4.250 Grouping is nonuniform spacing between the grooves of a disc recording.

Guard Circle

4.255 A guard circle is an inner concentric groove inscribed, on disc records, to prevent the pickup from being damaged by being thrown to the center of the record.

H and D Curve (Huter and Driffield Curve)

4.260 An H and D curve is a characteristic curve of a photographic emulsion which is a plot of density against the logarithm of exposure. It is used for the control of photographic processing, and for defining the response characteristics to light of photographic emulsions.

(Impregnated Tape)—See MAGNETIC POWDER-IMPREGNATED TAPE

Instantaneous Recording

4.265 An instantaneous recording is a recording which is intended for direct reproduction without further processing.

Lacquer Discs (Cellulose Nitrate Discs)

4.270 Lacquer discs are mechanical recording discs usually made of metal, glass, or paper, and coated with a lacquer compound (often containing cellulose nitrate).

Lacquer Original (Lacquer Master*)

4.275 A lacquer original is an original recording on a lacquer surface for the purpose of making a master.

* Deprecated.

Lacquer Recording

4.280 A lacquer recording is any recording made on a lacquer recording medium.

Laminated Record

4.285 A laminated record is a mechanical recording medium composed of several layers of material. Normally, it is made with a thin face of surface material on each side of a core.

Land

4.290 The land is the record surface between two adjacent grooves of a mechanical recording.

Lateral Recording

4.295 A lateral recording is a mechanical recording in which the groove modulation is perpendicular to the motion of the recording medium and parallel to the surface of the recording medium.

Light Modulator

4.300 A light modulator is the combination of a source of light, an appropriate optical system, and a means for varying the resulting light beam, so that a sound track may be produced (such as a galvanometer or light valve).

Light Valve

4.305 A light valve is a device in which the light passes through one or more slits, the width of which changes in accordance with the signal supplied.

Magnetic Biasing

4.310 Magnetic biasing is the simultaneous conditioning of the magnetic recording medium during recording by superposing an additional magnetic field upon the signal magnetic field.

NOTE: In general, magnetic biasing is used to obtain a substantially linear relationship between the amplitude of the signal and the remanent flux density in the recording medium.

Magnetic Biasing, A-C

4.315 A-c magnetic biasing is magnetic biasing accomplished by the use of an alternating current, usually well above the signal frequency range.

Magnetic Biasing, D-C

4.320 D-c magnetic biasing is magnetic biasing accomplished by the use of direct current.

Magnetic Cutter

4.325 A magnetic cutter is a cutter in which the mechanical displacements of the recording stylus are produced by the action of magnetic fields.

Magnetic Head

4.330 In magnetic recording, a magnetic head is a transducer for converting electric variations into magnetic variations for storage on magnetic media, for reconverting energy so stored into electric energy, or for erasing such stored energy.

Magnetic Head, Double Pole-Piece

4.335 A double pole-piece magnetic head is a magnetic head having two separate pole pieces in which pole faces of opposite polarity contact the medium on opposite sides. Either both or only one of these pole pieces may be provided with an energizing winding.

Magnetic Head, Single Pole-Piece

4.340 A single pole-piece magnetic head is a magnetic head having a single pole piece which contacts the recording medium on one side.

Magnetic Plated Wire

4.345 Magnetic plated wire is a magnetic wire having a core of nonmagnetic material and a plated surface of ferromagnetic material.

Magnetic Powder-Coated Tape (Coated Tape)

4.350 Magnetic powder-coated tape is a tape consisting of a coating of uniformly dispersed, powdered ferromagnetic material on a nonmagnetic base.

Magnetic Powder-Impregnated Tape (Impregnated Tape) (Dispersed Magnetic Powder Tape)

4.355 Magnetic powder-impregnated tape is a magnetic tape which consists of magnetic particles uniformly dispersed in a nonmagnetic material.

Magnetic Printing (Crosstalk*)

4.360 Magnetic printing is the permanent transfer of a recorded signal from a section of a magnetic recording medium to another section of the same or a different medium when these sections are brought in proximity.

Magnetic Recorder

4.365 A magnetic recorder is equipment incorporating an electromagnetic transducer and means for moving a ferromagnetic recording medium relative to the transducer for recording electric signals as magnetic variations in the medium.

NOTE: The generic term "magnetic recorder" can also be applied to an instrument which has not only facilities for recording electric signals as magnetic variations, but also for converting such magnetic variations back into electric variations.

Magnetic Recording Head

4.370 In magnetic recording, a magnetic recording head is a magnetic head for transforming electric variations into magnetic variations for storage on magnetic media.

Magnetic Recording Medium

4.375 A magnetic recording medium is a magnetizable material used in a magnetic recorder for retaining the magnetic variations imparted during the recording process. It may have the form of a wire, tape, cylinder, disc, etc.

Magnetic Recording Reproducer

4.380 A magnetic recording reproducer is equipment for converting magnetic variations on magnetic recording media into electric variations.

Magnetic Reproducing Head

4.385 In magnetic recording, a magnetic reproducing head is a magnetic head for converting magnetic variations on magnetic media into electric variations.

Magnetic Tape

4.390 Magnetic tape is a magnetic recording medium having a width

* Deprecated.

greater than approximately 10 times the thickness. This tape may be homogeneous or coated.

Magnetic Wire

4.395 Magnetic wire is a magnetic recording medium, approximately circular in cross section.

Magnetization, Longitudinal

4.400 Longitudinal magnetization in magnetic recording is magnetization of the recording medium in a direction essentially parallel to the line of travel.

Magnetization, Perpendicular

4.405 Perpendicular magnetization in magnetic recording is magnetization of the recording medium in a direction perpendicular to the line of travel, and parallel to the smallest cross-sectional dimension of the medium.

NOTE: In this type of magnetization, either single pole-piece or double pole-piece magnetic heads may be used.

Magnetization Transverse

4.410 Transverse magnetization in magnetic recording is magnetization of the recording medium in a direction perpendicular to the line of travel and parallel to the greatest cross-sectional dimension.

Master

4.415 A master is a metal part, normally derived from a disc recording by electroforming, which is a negative of the recording, i.e., a master which has ridges instead of grooves and thus cannot be played with a pointed stylus.

(Master, Lacquer) — See LACQUER ORIGINAL

(Master, Metal)—See MASTER, ORIGINAL

Master No. 2, No. 3, Etc.

4.420 A No. 2, No. 3 master is a master produced by electroforming from a No. 1, No. 2, etc. mold.

Master, Original (Metal Master) (Metal Negative) (No. 1 Master)

4.425 An original master, in disc recording, is the master produced by electroforming from the face of a wax or lacquer recording.

Mechanical Recorder

4.430 A mechanical recorder is an equipment for transforming electric or acoustical signals into mechanical motion of approximately like form and inscribing such motion in an appropriate medium by cutting or embossing.

(Mechanical Recording Head)—See CUTTER

(Mechanical Reproducer)—See PICK-UP

(Metal Master) (Metal Negative)—See MASTER, ORIGINAL

(Metal Positive)—See MOLD, NO. 1

Mixer

4.435 A mixer, in a sound recording or reproducing system, is a device having two or more inputs, usually adjustable, and a common output, which operates to combine linearly the separate input signals to produce an output signal.

NOTE: The term is also sometimes applied to the operator of the above device.

Modulation Noise

4.440 (Noise Behind the Signal.) The modulation noise is the noise caused by the signal. The signal is not to be included as part of the noise.

NOTE: The term is used where the noise level is a function of the strength of the signal.

Mold

4.445 In disc recording, a mold is a metal part derived from a master by electroforming which is a positive of the recording, i.e., it has grooves similar to a recording and thus can be played in a manner similar to a record.

Mold, No. 1 (Mother) (Metal Positive)

4.450 A No. 1 mold is a mold derived by electroforming from the original master.

Mold, No. 2, No. 3, Etc.

4.455 A No. 2, No. 3, etc. mold is a mold derived by electroforming from a No. 2, No. 3, etc. master.

(Mother)—See MOLD, NO. 1

Multitrack Magnetic Recording System

4.460 A multitrack magnetic recording system is a recording system which

provides, on a medium such as magnetic tape, two or more recording paths which are parallel to each other, and which may carry either related or unrelated program material in common time relationship.

(Needle Drag)—See STYLUS DRAG

(Needle Force)—See STYLUS FORCE

(Noise Behind the Signal)—See MODULATION NOISE

Noise Reduction

4.465 Noise reduction is a process whereby the average transmission of the sound track of the print (averaged across the track) is decreased for signals of low level and increased for signals of high level.

NOTE: Since the background noise introduced by the sound track is less at low transmission, this process reduces film noise during soft passages. The effect is normally accomplished automatically.

Offset Angle

4.470 In lateral disc recording reproduction, the offset angle is the smaller of the two angles between the projections into the plane of the disc of the vibration axis of the pickup stylus and the line connecting the vertical pivot (assuming a horizontal disc) of the pickup arm with the stylus point.

Opacity

4.475 Opacity of an optical path is the reciprocal of transmission. (See TRANSMISSION)

(Optical Density) — See TRANSMISSION DENSITY

Optical Pattern (Christmas Tree Pattern)

4.480 In mechanical recording, an optical pattern is a pattern which is observed when the surface of a record is illuminated by a light beam.

Optical Sound Recorder (Photographic Sound Recorder)

4.485 An optical sound recorder is equipment incorporating a light modulator and means for moving a light-sensitive medium relative to the modulator for recording electric signals derived from sound signals.

Optical Sound Reproducer

4.490 An optical sound reproducer is a combination of light source, optical system, photoelectric cell, and a mechanism for moving a photoelectric medium (usually film), by means of which recorded variations on a sound track may be converted into electric signals of approximately like form.

Overcutting

4.495 In disc recording, overcutting is the effect of excessive level characterized by one groove cutting through into an adjacent one.

Photographic Emulsion

4.500 Photographic emulsion is the light-sensitive coating on photographic film consisting usually of a gelatine containing silver halide.

Pickup, Acoustical

4.505 An acoustical pickup is a device which transforms groove modulations directly into acoustical radiation.

Pickup Arm (Tone Arm)

4.510 A pickup arm is a pivoted arm arranged to hold a pickup.

Pickup, Capacitor

4.515 A capacitor pickup is a reproducer which depends for its operation upon the variation of its electrical capacitance.

Pickup, Cartridge

4.520 A pickup cartridge is the removable portion of a pickup containing the electromechanical translating elements and the reproducing stylus.

Pickup, Crystal

4.525 A crystal pickup is a reproducer which depends for its operation on the piezoelectric effect of crystals.

Pickup, Light-Beam

4.530 A lightbeam pickup is a reproducer in which a light beam is a coupling element of the transducer.

Pickup, Magnetic (Variable-Reluctance Pickup)

4.535 A magnetic pickup is a repro-

ducer which depends for its operation on the variations in the reluctance of a magnetic circuit.

Pickup (Mechanical Reproducer)

4.540 A pickup is a mechanoelectrical transducer which is actuated by modulations present in the groove of the recording medium and which transforms this mechanical input into an electric output.

Pickup, Moving-Coil (Dynamic Reproducer)

4.545 A moving-coil pickup is a reproducer which depends for its operation on the variation of its inductance.

Pickup, Variable-Resistance

4.555 A variable-resistance pickup is a reproducer which depends for its operation upon the variation of a resistance.

Pinch Effect

4.560 In disc recording, the pinch effect is a pinching of the reproducing stylus tip twice each cycle in the reproduction of lateral recordings, due to a decrease of the groove angle cut by the recording stylus when it is moving across the record as it swings from a negative to a positive peak.

Playback

4.565 A playback is an expression used to denote reproduction of a recording.

(Playback Loss)—See TRANSLATION LOSS

Poid

4.570 A poid is the curve traced by the center of a sphere when it rolls or slides over a surface having a sinusoidal profile.

Post-emphasis (De-emphasis) (Post Equalization)

4.575 Post-emphasis is usually a form of equalization complementary to pre-emphasis.

Pre-emphasis (Pre-equalization)

4.580 In recording, pre-emphasis is an arbitrary change in the frequency response of a recording system from its basic response (such as constant velocity or amplitude) for the purpose of improvement in signal-to-noise ratio, or the reduction of distortion.

Preform (Biscuit*)

4.585 In disc recording, a preform is a small slab of record stock material as it is prepared for use in the record presses.

Pressing

4.590 In disc recording, a pressing is a record produced in a record-molding press from a master or stamper.

Recording Channel

4.595 The term "recording channel" refers to one of a number of independent recorders in a recording system or to independent recording tracks on a recording medium.

NOTE: One or more channels may be used at the same time for covering different ranges of the transmitted frequency band, for multichannel recording, or for control purposes.

Recording Loss

4.600 Recording loss, mechanical recording, is the loss in recording level whereby the amplitude of the wave in the recorded medium differs from the amplitude executed by the recording stylus.

Re-recording

4.605 Re-recording is the process of making a recording by reproducing a recorded sound source and recording this reproduction. (See DUBBING)

Re-recording System

4.610 A re-recording system is an association of reproducers, mixers, amplifiers, and recorders capable of being used for combining or modifying various sound recordings to provide a final sound record. Recording of speech, music, and sound effects may be so combined.

Ring Head

4.615 A ring head is a magnetic head in which the magnetic material forms an enclosure with one or more air gaps. The magnetic recording medium bridges one

* Deprecated.

of these gaps and is contacted by the pole pieces on one side only.

Rumble (Turntable Rumble)

4.620 Rumble is low-frequency vibration mechanically transmitted to the recording or reproducing turntable and superimposed on the reproduction.

Scoring System

4.625 A scoring system for motion picture production is a recording system used for recording music to be reproduced in timed relationship with a motion picture.

Sensitometry

4.630 Sensitometry is the measurement of the light response characteristics of photographic film under specified conditions of exposure and development.

Shaving

4.635 In mechanical recording, shaving is the process of removing material from the surface of a recording medium for the purpose of obtaining a new recording surface.

Side Thrust

4.640 Side thrust, in disc recording, is the radial component of force on a pickup arm caused by the stylus drag.

Single Track (Standard Track)

4.645 A single track is a variable-density or variable-area sound track in which both positive and negative halves of the signal are linearly recorded.

Sound Recording System

4.650 A sound recording system is a combination of transducing devices and associated equipment suitable for storing sound in a form capable of subsequent reproduction.

Sound Reproducing System

4.655 A sound reproducing system is a combination of transducing devices and associated equipment for reproducing recorded sound.

Sound Track

4.660 A sound track is a narrow band, usually along the margin of a sound film, which carries the sound record. In some cases, a plurality of such bands may be used.

Sound Track, Multiple

4.665 A multiple sound track consists of a group of sound tracks, printed adjacently on a common base, independent in character but in a common time relationship, e.g., two or more have been used for stereophonic sound recording.

Sound Track, Push-Pull, Class-A

4.670 A class-A push-pull sound track consists of two single tracks, side by side, the transmission of one being 180 degrees out of phase with the transmission of the other. Both positive and negative halves of the sound wave are linearly recorded on each of the two tracks.

Sound Track, Push-Pull, Class-B

4.675 A class-B push-pull sound track consists of two tracks, side by side, one of which carries the positive half of the signal only, and the other the negative half. During the inoperative half-cycle each track transmits little or no light.

(Spiral Crossover) — See GROOVE, LEADOVER

(Spiral, Fast)—See GROOVE, FAST

(Spiral, Lead-In)—See GROOVE, LEAD-IN

(Spiral, Throw-Out) — See GROOVE, THROW-OUT

Sputtering (Cathode Sputtering)

4.680 Sputtering is a process sometimes used in the production of the metal master wherein the original is coated with an electric conducting layer by means of an electric discharge in a vacuum.

NOTE: This is done prior to electroplating a heavier deposit.

Squeeze Track

4.685 A squeeze track is a variable-density sound track wherein by means of adjustable masking the width is varied by the recording operator, thus providing an overriding control on the amplitude of the reproduced signal.

Stamper

4.690 A stamper is a negative (generally made of metal by electroforming) from which finished pressings are molded.

Stamper, Backed

4.695 A backed stamper is a thin metal stamper which is attached to a backing material, generally a metal disc of desired thickness.

(Standard Track) — See SINGLE TRACK

Stylus, Cutting

4.700 A cutting stylus is a recording stylus with a sharpened tip which, by removing material, cuts a groove into the recording medium.

Stylus Drag (Needle Drag)

4.705 Stylus drag is an expression used to denote the force resulting from friction between the surface of the recording medium and the reproducing stylus.

Stylus, Embossing

4.710 An embossing stylus is a recording stylus with a rounded tip which displaces the material in the recording medium to form a groove.

Stylus Force (Static Stylus Force) (Certical Stylus Force) (Needle Force) (Stylus Pressure*)

4.715 The stylus force is the vertical force exerted on a stationary recording medium by the stylus when in its operating position.

Stylus, Recording

4.720 A recording stylus is a tool which inscribes the groove into the recording medium.

Stylus, Reproducing

4.725 A reproducing stylus is a mechanical element adapted to following the modulations of a record groove and transmitting the mechanical motion thus derived to the pickup mechanism.

NOTE: Stylus is a term defining a pickup needle or a holder furnished with a jewel or other abrasive-resistant tip. A stylus may or may not be arranged for convenient replacement.

Surface Noise

4.730 In mechanical recording, surface noise is the noise component in the electric output of a pickup due to irregularities in the contact surface of groove. (See GROUND NOISE)

(Throw-Out Spiral) — See GROOVE, LEAD-OUT

Toe and Shoulder (of an H and D Curve)

4.735 Toe and shoulder are the terms applied to the non-linear portions of the H and D curve which lie respectively below and above the straight portion of this curve.

(Tone Arm)—See PICKUP ARM

Tracing Distortion

4.740 Tracing distortion is the non-linear distortion introduced in the reproduction of mechanical recording because the curve traced by the motion of the reproducing stylus is not an exact replica of the modulated groove. For example, in the case of a sine-wave modulation in vertical recording the curve traced by the center of the tip of a stylus is a poid.

Tracking Error

4.745 Tracking error, in lateral mechanical recording, is the angle between the vibration axis of the mechanical system of the pickup and a plane containing the tangent to the unmodulated record groove and being perpendicular to the surface of the recording medium at the point of needle contact.

Transition Frequency (Crossover Frequency) (Turnover Frequency)

4.750 The transition frequency, of a disc recording system, is the frequency corresponding to the point of intersection of the asymptotes to the constant amplitude and the constant velocity portions of its frequency response curve. This curve is plotted withoutput voltage ratio in decibels as the ordinate and the logarithm of the frequency as the abscissa.

* Deprecated.

Translation Loss (Playback Loss)

4.755 Translation loss is the loss in the reproduction of a mechanical recording whereby the amplitude of motion of the reproducing stylus differs from the recorded amplitude in the medium.

Transmission

4.760 Transmission, as applied to optical recording, is the ratio of the light flux transmitted by a medium to the light flux incident upon it. Transmission may be either diffuse or specular.

Transmission Density, Diffuse*

4.765 Diffuse transmission density is the value of the photographic transmission density obtained when the light flux impinges normally on the sample and all the transmitted flux is collected and measured.

Transmission Density, Photographic* (Optical Density)

4.770 Photographic transmission density is the common logarithm of opacity. Hence, film transmitting 100 percent of the light has a density of zero; transmitting 10 percent a density of 1, etc. Density may be diffused, specular, or intermediate. Conditions must be specified.

Transmission Density, Specular

4.775 Specular transmission density is the value of the photographic density obtained when the light flux impinges normally on the sample and only the normal component of the transmitted flux is collected and measured.

(Turnover Frequency)—See TRANSITION FREQUENCY

Unilateral-Area Track

4.780 A unilateral-area track is a sound track in which one edge only of the opaque area is modulated in accordance with the recorded signal. There may, however, be a second edge modulated by a noise reduction device.

Variable-Area Track

4.785 A variable-area track is a sound track divided laterally into opaque and transparent areas, a sharp line of demarcation between these areas forming an oscillographic trace of the wave shape of the recorded signal.

Variable-Density Track

4.790 A variable-density track is a sound track of constant width and of uniform light transmission on any instantaneous transverse axis and of which the average light transmission varies along the longitudinal axis in proportion to some characteristic of the applied signal.

Vertical Recording (Hill and Dale Recording)

4.795 A vertical recording is a mechanical recording in which the groove modulation is in a direction perpendicular to the surface of the recording medium.

Wax

4.800 In mechanical recording, wax refers to a blend of waxes with metallic soaps. (See also WAX, CAKE.)

Wax, Cake

4.805 Cake wax is a thick disc of wax upon which an original mechanical disc recording may be inscribed.

Wax, Flowed

4.810 Flowed wax is a mechanical recording medium in disc form, prepared by melting and flowing wax onto a metal base.

Wax Original (Wax Master*)

4.815 A wax original is an original recording on a wax surface for the purpose of making a master.

(Wow)—See FLUTTER

* For details of measurement and specifications see American Standard Diffuse Transmission Density, Z38.2.5—1946, or the latest edition thereof approved by the American Standards Association.

* Deprecated.

Appendix

DISC RECORDING ADJUSTMENTS

Descriptive Term	*Symptoms (Visible and/or Audible)*	*Causes and Cures*
Banding (or Defective Tracking).	Uneven groove-spacing	Faulty action of traversing mechanism, e.g., binding. Also may be due to lack of precision in feed gear or lead screw in cheap equipment.
Chatter	An erratic "spotted" pattern in grooves, with short alternate light and dark strips.	Poor stylus or one set at a wrong angle; or by insufficient vertical damping. Too deep a cut in thin disc coating may also produce a similar effect, which is most likely to occur close to center of record.
Cut-over (or overcutting) Groove-wall breakdown;	One groove running into the next, causing "repeating."	Overmodulation, i.e., too high recording level, for particular groove-pitch in use, or cutting too deep.
Cutting-through	Penetrating through coating of disc and into base material, usually thereby damaging stylus	Cutting too deeply; extraneous vibration; damaged gear tooth in feed mechanism not fully engaged when cutting-head lowered on record surface, and later slipping into engagement with a jar; hard drop in setting down cutting-head; cutting-head bouncing after thread-tangle; failure to raise cutting-head as end of feed mechanism reached.
Dry Cut	A bad groove-cut, indicated by the thread appearing kinky, brittle, and dry.	Incorrect cutting-angle; bad stylus; old or inferior quality blank.
Echo (or Pre-echo, "Ghost" effect, double-talk).	The modulation from one groove is impressed faintly on the adjacent groove.	Overmodulation; too deep cut; too light pick-up; use of blunt nonferrous play-back needles; soft type of blank coating; and, with solid-stock pressings, displacement of grooves during processing, or surface flow of matrices in pressing operation; or surface flow of original wax during cutting.

Descriptive Term	*Symptoms (Visible and/or Audible)*	*Causes and Cures*
Flutter	A type of "wow" having fluctuation changes between 6 to 30 per second. Produces harmonic distortion in lateral groove, and increases residual noiselevel by modulating surface-hiss.	Undesired vertical oscillations of cutting-head caused by mechanical resonance, e.g., the mass of the cutting-head in combination with blank coating material. Remedy—add vertical damping, of oil-dashpot type. Also due to irregular blank surface, non-level or unbalanced turntable; or transmission of motor vibration through turntable drive or suspension; poor play-back equipment; can also be caused by magnetic pull of cutting-head on steel turntable beneath—use ¼ in. thick beaverboard or lino disc between turntable and blank.
Grey Cut	Reflected light reveals that record grooves have flull greyish appearance. Results in increased surface-noise.	Imperfect or worn cutting-stylus; incorrect cutting-angle.
Groove-jumping	Pick-up needle will not remain in groove on play-back.	Too shallow cut; uneven play-back turntable; pick-up arm stiff or out of alignment; unsuitable needles.
Groove-skating	Pick-up needle tending to climb or "skate" the groove walls, causing fluctuations in output, with accompanying several db., rise in surface-noise, in addition to increased harmonic distortion and record wear.	Usually pick-up with too low vertical pressure, particularly if combined with appreciable tracking error and horizontal inertia. Also caused by cutting with broken-tipped sapphire. (A minimum force of 12 grams is required to prevent "skating" with the 0.002 in max. amplitude and 90 degree groove commonly employed.)
Hum	Small arrow-head (Vs) patterns, distributed over record.	May be due to excessive hum in recording amplifier. Often occurs with cheap recorder, where hum is masked in play-back by restricted low-frequency response.
Kinky Thread	Thread breaks off into short loops or tends to curl tightly, instead of lying straight like a flexible chain.	Either dull, worn stylus or over-dry or aged blank.
Orange-Peel Effect	Mottled appearance (similar to skin of orange) on blank surface that increases surface-noise.	This surface irregularity is usually attributable to manner of applying surface-coating e.g., dipping.

Descriptive Term	*Symptoms (Visible and/or Audible)*	*Causes and Cures*
Patterns (or Patterning; Patternweaving).	Generic term applied to peculiar designs that are sometimes visible on blanks examined, at a certain angle, under direct light.	Usually turntable vibration—vertical or lateral, or a combination of both. Check adjustment of rimdrive tension, with this type of turntable; and, on rubber mountings, adjust tightness of mounting bolts.
.....Moire	A pattern (resembling the cloth of the same name) or "watered-silk" effect.	Usually indicates vibration in turntable mounting or transmitted to it by motordrive coupling; or worn rubber-drive wheels; thread or dirt in feed mechanism; overloaded motor; amplifier hum.
....."Skip"	Cutting-head has "skipped" portion of blank surface (on one radius), due to "bouncing" during recording.	Produced by dented or bent base of blank, or swirled coating. Occasionally due to hard spot in coating. Use advance ball.
.....Spoke	Recurrent design in the form of curving spokes, i.e., alternate light and dark areas, or arrowheads (Vs.).	Light and heavy cutting, due to motordrive vibration, or worn pulley or bearings; or impulses from an overloaded motor.
Piano-Whine	Unpleasant whine when reproducing pianoforte recording.	Sudden variations in recording and/or reproducing turntable speed, due to large amplitudes occurring in piano music. Use heavier turntable.
Rumble	Undesired low-frequency noise present in disc play-back.	Vibration; sometimes due to external noises, e.g., traffic or movement of people. Especially noticeable when too much bass boost in reproduction is being used. Remedies are to (a) record more bass (b) oil turntable shaft with thick motor oil.
Surface-Noise (or Scratch; background noise)	Hissing noise in disc reproduction.	Dust and foreign particles in grooves; aged blank or type of blank used; worn cutting-stylus; wrong depth of cut, usually too deep; incorrect stylus "rake" angle; stylus not straight in cutting-head; cutting-head not tracking across a radius (approx.) of blank; type of pickup and needle used. In solid stock pressings noise is due to their granular structures, steps in processing, and embraces all frequencies.

Descriptive Term	*Symptoms (Visible and/or Audible)*	*Causes and Cures*
Swirl Lanes	Curving areas of extra thick coating radiating from centre of certain blanks.	Often present in blanks coated by "dipping"; sometimes causes "skip" patterns.
Thread Tangle (or chip) (or scrap)	The coating thread during cutting becomes tangled at the stylus, and if pulled to release or allowed to remain, can cause cutting-through or uneven groove spacing; also responsible for crackling noises in play-back.	Usually due to removed coating thread coming around stylus on outside i.e., side nearer to outer edge of blank, instead of around inside. Correct by slight offset (not more than 5 degrees) of stylus cutting-face; use of brush or other means of thread control; or cut inside-out.
Twinning (or Twin-grooving)	Irregular groove-spacing, making width of walls or "lands" uneven (Generally in pairs, i.e., "land" is alternately wide and narrow).	Faulty action, e.g., binding, of traversing (feed) mechanism, or of drive to this mechanism.
Whine	Fluctuation in apparent loudness and frequency of a reproduced sound. A type of "wow".	Speed of recording and/or reproducing turntable varying at a slow rate.
Whistling (or Squeaking)	Whistling noise of any kind heard during cutting; usually occurs in conjunction with dull cut and dry, crumbly thread.	Denotes a bad stylus, the wrong cutting-angle, or both. Occasionally due to aged blank coating.
Wows (or Wow-Wows)	Rhythmic or arrhythmic change in intensity (up to 6 per second) in reproduced sounds.	Fundamentally arises from speed fluctuation in either recording or reproducing equipment, but made more apparent by phenomena of stationary waves in an enclosure.
.....Gargle	Speed variation 30 to 200 c.p.s.	If of regular period identifiable with turntable rotation speed, it is probably connected with turntable drive system, e.g., slippage due to flat pulley, or oil on pulley (in rim-pulley drives); loose set screws; worn gear section. Also produced
.....Whiskers	Speed variation over 200 c.p.s. (as a rule not visible in the form of patterns, unless associ-	

Descriptive Term	*Symptoms (Visible and/or Audible)*	*Causes and Cures*
	ated with vertical vibration, Stroboscope may reveal certain types of "wow" by appearing to oscillate. Aurally disturbing.)	by blank slippage where no center clamp used; oversize centre-hole; warped blank; warped or out-of-round turntable. Occasionally, binding or non-aligned bearings in feed mechanism.
.....Waver (or Wobble)	Intermittent fluctuation.	Worn turntable bearings or insufficient tension on drive or idler-pulleys.

GLOSSARY

Abrasive . . . It is often stated that an abrasive filler, e.g., rottenstone, is incorporated in the shellac-base solid-stock formula for commercial pressings to grind the needle tip to the groove shape, on the principle that is better for the record to wear the needle than for the latter to wear the record. But this is erroneous, as reputable manufacturers, in general, do not include abrasives in the stock for this purpose. But a hard pigment, e.g., barytes, which has a crystalline structure, used as a filler, is abrasive to an extent, and so a balance has to be struck between this factor and durability. The coating of direct discs should contain no abrasive substance, which omission, although reducing the resistance of the record to wear, also markedly lessens the surface-noise.

Acoustic Absorption . . . When a sound wave meets an obstacle, e.g., the walls of an enclosure, some of the energy is transmitted, some reflected, and the balance is absorbed. The coefficient of absorption is defined, for a plane surface, as the fraction of incident energy that is not reflected, and it varies considerably with frequency. The total absorption determines the reverberation period in a given volume.

Advance Ball . . . Small sapphire ball, or depth shoe, situated immediately in front of stylus and riding lightly on record material, is intended to smooth the way for the cutting stylus and maintain an even depth of cut. Unless equipment is designed for use with an advance ball, its incorporation is likely to cause trouble, e.g., thread fouling.

Amplitude . . . The maximum height, or maximum depth of a waveform, measured from its base line or middle position. Roughly, controlled by the level used in recording. The energy contained in a wave varies as the square of the amplitude of the wave.

Auditory Perspective . . . The faculty of the human pair of ears to appreciate relative distances and bearings of sound sources in combination in an enclosure. Can be reproduced by means of a three-channel reproducing system. Also localization, spatial effect.

Bar . . . Unit of alternating acoustic (sound or excess) pressure on a surface or in a freely progressing wave. Equals one r.m.s. dyne per sq. cm.

Binder . . . The basic material in solid-stock pressing, chiefly shellac, which causes the various substances to adhere together and form, after heating and cooling, a solid mass.

Blank . . . Strictly, refers to an unrecorded disc only. A good inexpensive blank is the chief obstacle preventing the wider use and application of direct recording, but present developments will undoubtedly solve this problem, when it is permissible for all the details to be released. For example, polyvinyl alcohol, dissolved in a suitable solvent, may make an excellent disc recording medium, and ethyl-cellulose sheeting (0.015 in.) is already being used for embossed long-playing records.

Buzz . . . In record reproduction is caused by imperfect or discontinuous contact of play-back needle in groove, due to high mechanical impedance, etc., referred to needle point. It is an audible effect of tracing distortion.

Cellulose Acetate . . . Acetylcellulose. The basic ingredient in some varnish formulae originally used for direct recording disc coatings. The term is commonly used as a synonym for instantaneous or direct recording, as distinguished from records made by processing, but it is a misnomer because mod-

ern direct play-back discs do not have acetate coatings. Pressings are, however, made in this substance, instead of the usual solid-stock material.

Constant Linear Velocity Recording . . . The basic principle of this system is that the linear speed at which the record groove passes under the recording/producing stylus is constant from start to finish. Obviously, to accomplish this it is necessary that the speed of rotation must be steadily increased towards the centre of the record. In reproduction, this can be effected by a variable gear or special governor attachment controlled by the movement of the pick-up carrying-arm. It is claimed for this method that, as the linear velocity at the outer radius of the normal constant angular velocity record is unnecessarily high, a playing-time of 18 mins., with a 12 in. record, is possible. Also known as Constant Groove Speed Recording, or Varying Angular Velocity Recording.

Continuous Recording . . . A minimum of two turntables and associated equipment is required to make satisfactory disc recordings without a noticeable break in the recorded material. By recording with both turntables towards the end of one disc, just prior to the change-over, the slight overlap will preserve continuity.

Contrast Expansion . . . A means for compensating for volume compression during recording or transmission of music that enables a wider range of sound intensity to be reproduced than otherwise would be possible. It would be a great advance if commercial recordings could have the coefficient of compression notated on the label. Thus, in reproduction, the play-back equipment would be set to an expansion coefficient equal to the compression coefficient, so that the ultimate rendition would have the same dynamic range as the original performance.

Counterweight . . . A weight fitted on certain types of cutting-heads and pickup to reduce their pressure or weight on the blank.

Cross Modulation . . . Sum-and-difference tones usually produced by non-linearity in some part(s) of the recording/play-back system. Such distortion is often attributed mainly to the amplifier and/or play-back system. Such distortion is often attributed mainly to the amplifier and/or play-back needle, but as much as 12 per cent cross-modulation can be realized if the burnishing ball on the cutting stylus tip is too large. Optimum value of ball size will reduce such distortion to 1 per cent.

Cross-Over Frequency . . . The arbitrarily chosen frequency, between 250 and 1,000 c/s., in modified constant velocity recording, at which the change-over from constant amplitude to constant velocity cutting is made. Also known as the Transition Frequency, Change-over Frequency, or Turn-over Point.

Cueing . . . The process of making starting points, or reference marks, on records to be used for dubbing or re-recording.

Cut . . . To cut means to engrave a groove. The cut means the groove.

Cutter . . . Term sometimes applied to both the cutting-head and the stylus.

Cutting-Head . . . The recording process begins at the cutting head, whose principal requirement is to engrave a mechanical facsimile of a given sound wave(s) into the recording material. To do this, the cutting-head should be independent of any load imposed by the cutting medium. Both electro-magnetic and piezo-electric crystal heads are currently used.

Dig-In Angle . . . The setting of the cutting stylus, in relation to the blank surface, is such that the tip is driven into the coating; the opposite of drag-angle, i.e., the tip drags along the surface; also called "Dig Out."

Direct Recording . . . The method of sound recording on discs which, after little or no processing, play back immediately. This latter feature is the fundamental difference between commercial recording and direct recording. Also known as Instantaneous or Spot Recording.

Disc . . . Abbreviation for recording disc. Also spelled Disk. Alternative terms occasionally used, Plate, Platter. Schallplatte (German) and Disque (French) for gramophone record.

Drive Holes . . . Three holes spaced around the center hole of a blank to engage a drive pin in the turntable, thereby preventing slippage during recording.

Dubbing . . . Strictly, this term refers to adding sounds to an original record by re-recording it, and while this is being performed, mixing in other sounds, whether from a microphone or other recordings. As generally used the term means making a copy of a record by re-recording, i.e., the original record is reproduced with a pickup, whose amplified output is fed to the recording amplifier. It must be remembered that surface-noise, peaks, etc., in the original record, unless equalized in play-back, will be additive in the final re-recording. Term is derived from the old "doubling," i.e., a mechanical duplicating process for the old wax cylinders.

Dubbing (Stylus) . . . Means lapping with diamond dust.

Ear . . . It must be remembered that the human ear, although subjective, is the final arbiter in questions concerning sound, recording/reproducing quality, and response curves, measurements, etc., are not the ultimate criterion. But, of course, the term "ear" is the collective ear of several experienced artistic and technical judges.

Edison, Thomas Alva (1847-1931) . . . Amer. inventor of the phonograph, which used the hill-and-dale cut on cylinders, and the original model (1877) was essentially a direct recorder.

Electrical Transcription . . . Disc recording, usually slow-speed vertical cut type, specially made for broadcasting. In U.S.A., if not a direct recording, it is generally a vinyl acetate pressing.

Electro-Plating . . . In processing, the deposition of a layer of copper on the original recording (or wax master), after the surface of the latter has been made conducting by brushing on graphite powder or by sputtering.

Embossed Recording . . . The embossing or burnishing method, in which no coating material removed, used in combination with constant groove-speed recording, makes possible 30 minutes music recording or 45 minutes' speech recording on one side of a 12 in. disc. A polished, round, embossing stylus (in contrast to the usual sharp cutting or engraving tool) which is also used for play-back, impresses grooves in e.g., a lacquer coating, or in ethyl-cellulose, producing a high signal/noise ratio.

Equalization . . . Can be defined as the logarithmic progressive increase in amplitude of the highest frequency that it is desired to record, from the outside to the inside of a record, and is especially desirable in slow-speed recording, to compensate for the falling-off in quality towards the center of the record, due to decreased lineal velocity. The equalization control can be operated manually, motor operated, or driven by the cutting-head traversing mechanism on the recorder. It must be remembered, when using equalizing networks

for any form of frequency correction, that the equalizer and cutting-head curves must match accurately enough to produce the desired effect, as incorrect equalization will cause irregularities in the response curve, which are often more objectionable to the ear than lack of overall range. Alternative names: Tone Control or Tone Compensation.

Feed Mechanisms . . . These are mechanisms for traversing the cutting-head slowly across the face of the blank, to produce the prescribed number of grooves per inch. There are several types of tracking mechanism, e.g., the swinging arm or fan type, including the underdrive tangent type, in which the cutting-head is attached to a follower arm driven by a long leadscrew geared to the turntable shaft (these have a tracking error); and the straight-across carriage types, with overhead feed (leadscrew driven by spindle through worm and gear or by belt from turntable spindle), or the undermounted type, with the cutting-head suspended from an extension arm carried on guide-rails. Regardless of the type employed, it must be a precision mechanism. By the use of an independent drive, or a variable-speed gear, the pitch of the recorded spiral can be made variable. In some professional models an accurate scale is fitted, which shows the exact groove at which recording begins or ends and the total playing-time.

Fibrous Filler . . . Usually flock (similar to long-staple cotton), chosen because of its properties in reducing the brittleness of the shellac binder, etc., used in pressings.

Filler . . . The insert fine-grained substance, e.g., carbon black and pigments, added to the binding material in solid-stock record manufacture to give weight and color.

Filter . . . An electrical network whose essential function is to let pass desired frequency bands and to attenuate highly neighboring undesired frequency bands.

Gliding Frequency Record . . . Recorded continuous frequency-run from, 10,000 c.p.s. to 30 c.p.s., with constant level above 500 c.p.s. See TEST RECORDS.

Gram or Gramme . . . Metric unit of mass and weight. Equals 15,432 grains, and 0.03527 oz. avoirdupois, i.e., 30 grams approx. equals 1 oz.

Groove . . . The Archimedean spiral cut into the blank surface by the stylus traversing radially across the record. Also known as the Track.

Groove Locaters . . . Devices that will enable a record groove, or part of a groove, to be located instantly with precision by the play-back needle. There are many such devices, ranging from the simple R.P.M. groove indicator to complex mechanisms, known as word-spotters.

Headphones . . . A pair of high-grade headphones for quality checking and monitoring has advantages in certain circumstances, e.g., permits concentration on recording material without distraction from external sounds.

Home Recording . . . The descriptive term popularly applied to direct recording system used by amateurs. It is a carry-over from the days of the short-lived acoustic toy recorders.

Hum . . . It is the singing note emitted from a sound reproducer, due to inadequate filtering in the high voltage a.c. supply, and inductive and capacitative coupling between the power source and some part of the audio system. The recording amplifier hum-level must be reduced to a minimum, i.e., no a.c. ripple must be discernible, even at maximum gain.

Humidity . . . Extremes of humidity and temperature considerably affect the performance of certain links in the recording chain, e.g., the blank, particularly the gelatinous type, and crystal cutting heads and pickups.

Indentation Recording . . . Term applied to recording on certain metal discs, e.g., aluminum, with a diamond stylus, in which the material is compressed to make grooves, i.e., no thread is removed.

Induction Coil Recording . . . Sufficient pick-up for recording both sides of a telephone conversation can be obtained by placing a suitable induction coil on the ringer box of the telephone.

Jewel . . . The stone in a sapphire or diamond stylus or play-back needle.

Land . . . The uncut space between grooves on a record.

Lateral Recording . . . The stylus cuts a groove of constant width and depth, but moves from side-to-side in accordance with modulation. System commonly used for commercial pressings and direct recording.

Level . . . Roughly, the sound-level or volume of sound used for recording/reproduction. The term also refers to the R.M.S. velocity of the cutting-stylus or play-back needle tip.

Linear Velocity . . . The speed at which a record groove passes a given point. Also, Tangential Needle Velocity.

Long-Playing Records . . . Recordings that have a playing time considerably longer than 3½ or 5 minutes of the conventional lateral-cut 10 and 12 in. discs can be produced by (a) fine pitch records, e.g., 150 to 300 grooves per inch; (b) slow-speed, i.e., 45 or 33⅓ r.p.m. or less, records; (c) large diameter records, up to 20 inch; (d) variable-pitch recording; (e) constant amplitude records; (f) constant linear velocity system, and (g) vertical recording.

Loudspeaker . . . An electro-acoustic transducer designed to radiate sound waves into an enclosure or open-air. Two general types are in use to-day, namely, the direct radiator (with baffle or labyrinth) and the horn type.

Lubricant . . . The once common practice of lubricating or waxing the surface of direct recordings (e.g., with a solution based on carbon tetrachloride, plus a little paraffin dissolved in it) to prolong playing-life, is not recommended these days, as such applications collect dust and add to the surface noise. Sometimes called a Preservative.

Magnifying Glass . . . A hand-glass as distinguished from a microscope; useful for groove examination, styli tips, etc.

Marker Groove . . . A groove cut to indicate end of feed on record.

Master . . . In direct recording, refers to an oversize blank from which copies are to be made by processing, e.g., 11¼ in. for 10 in., 13¼ in. for 12 in. pressings. In commercial manufacture, the copper matrix obtained by electro-plating the original or master wax recording.

Maxfield, J. P. and Harrison, H. C. . . . Two engineers of the Bell Telephone Laboratories, In America, who published a paper in 1926 which described a method of cutting the recording wax master electrically, and also gave the fundamental theory of the design of mechanical gramophones. It is probably the most important single contribution to the subject, as, apart from the examples of scientific design given, it disclosed the practical application of a new system based on electrical concepts for the quantitative treatment of many acoustic problems. Thus, the analogy

between certain mechanical and electrical quantities can be shown; Mass (inertia) — Inductance; Compliance — Capacity; Resistance (Friction)—Resistance.

Microphone . . . An acoustic-electrical convertor of sound waveforms. All microphones in use today may be classified as follows: pressure, velocity, or a combination of pressure and velocity, and directional or non-directional. Actual types currently employed for recording include (a) condenser (b) moving-coil, (c) ribbon, and (d) crystal.

Microscope . . . The optical device, calibrated, with magnifications, say 60 X, sometimes mounted, on a swinging arm, and illuminated for examining record grooves, checking relation of groove to "land" usually 60 to 40 ratio), etc.

Mil . . . Equals one-thousandth of an inch. (0.001 in.)

Mixer . . . An arrangement of resistance potentiometers, to regulate the input of several channels, e.g., microphones, pick-ups, when they are added together to form the transmission into another channel, e.g., the main amplifier.

Modulation . . . Can be regarded as the vibration of the cutting-stylus and, in turn, the recorded waveform, controlled by the electrical impulses entering the cutting-head.

Monitoring . . . The process of changing the volume manually during cutting, or listening to check quality applied to cutting-head.

Mother . . . In processing, the copper electro-plate positive made from the copper master, to permit the latter to be stored for safety, etc.

Mushing Down . . . Distortion, i.e., pushing down, of the record material by a heavy pick-up needle.

Needle . . . Needles for play-back may be divided roughly into three groups; (1) steel and steel-alloy: (2) non-ferrous: (3) permanent (jewel type) and semi-permanent. Also called stylus.

Negative Feed-Back . . . Interconnection of the input and output terminals of an amplifier, in such a manner that the output opposes the input which improves the frequency response and stability of the amplifier, and reduces harmonic distortion.

Non-Ferrous Needle . . . Any non-metallic play-back needle, e.g., fibre, Burmese colour, cactus, thorn. Having a high coefficient of friction, these needles are not generally recommended for playing direct recordings.

Off-the-Air Recording . . . Recording of broadcast programs by means of a separate high-quality radio-tuner, i.e., radio-frequency stage, or an ordinary radio tuner. Usually provides good quality as problems of microphones, artists' balance, and studio acoustics are solved at transmitting end.

Patch . . . To join together units of apparatus, e.g., amplifiers, equalizers, etc., by flexible cords terminated on plugs, which are inserted into panel jacks bridged across the terminations of each unit.

Patching-In and Patching-Out . . . (patching-in) of stand-by equipment in a circuit with patch cords, defective equipment being thereby patched out.

Pickup . . . Device that translates mechanical motion of a needle riding in the record groove into electrical voltage. There are two basic types, electromagnetic and crystal, with the former sub-divided into moving-armature and moving coil. Also called reproducer.

Pinch Effect . . . May be defined as the magnitude of the up-and-down mo-

tion of the pickup stylus tip caused by the periodic variation of the included angle between the two modulated groove walls.

Plasticisers . . . Non-evaporating high-boiling liquids, used as ingredients in lacquers, to preserve flexibility and adhesive powers of cellulose layers. Examples are tricresyl phosphate, triphenyl phosphate, glycol esters, castor oil, camphor, etc.

Play Back . . . The immediate reproduction from a record.

Play-Back Loss . . . Is the difference between the recorded and reproduced level in the identical radius of a record.

Portable Recorder . . . Recording equipment in a carrying case, as distinguished from a console or permanent studio model.

Pre-Grooving . . . To obviate the feed mechanism, the original direct recording blanks, usually zinc, had narrow grooves cut in them by the manufacturer, which then only required to be "spread" by the cutting stylus movement.

Presence . . . Term applied to a quality of naturalness in sound recording/reproduction, so that the completeness of the illusion is such that the listener believes the sounds are being produced intimately at the loudspeaker, and not at some remote location.

Pressing(s) . . . A disc record formed by pressure, with or without heat. Recordings today are pressed in (a) solid-stock material; (b) vinylite or cellulose acetate; (c) laminated stock, i.e., a good grade of surface material on a Kraft base over a cheap core. A pressing refers to the familiar phonograph record.

Processing . . . An inclusive term covering the involved steps of several positive-negative reversals, by means of firstly electro-plating the master disc, to produce the final pressing.

Recorder . . . Term correctly applied to the equipment for recording, and not the operator, i.e., the recordist.

Reverberation Period . . . The time, in seconds, required for the decay of the sound intensity in an auditorium over an amplitude range of one million, or 60 decibels, with no emission of sound power during the decay. The less the acoustic absorption, the more pronounced is the reverberation; a large amount of sound absorption in an enclosure makes the reception of sounds "dead". A sufficient degree of reverberation enlivens the sounds within an enclosure and the surroundings are then said to be "live."

Run-In and Run-Out Grooves . . . The starting and stopping spirals on discs, usually cut by a manual feed mechanism, which also produces the locked concentric stopping groove. (Spiralling.)

Scale Distortion . . . The acoustic distortion or unbalance that occurs whenever sounds are reproduced at a different level from the original.

Shadowgraphing . . . Individual inspection, under great magnification, of needles for playing-back direct recordings. Also known as Microspecting.

Shellac . . . The purified product of lac, a yellow or brown colored resinous substance produced as an incrustation on tree bark by the coccus lacca insect. Used as the chief base ingredient in solid-stock pressings.

Shoulders . . . Ridges formed on the side of the needle-tip due to wear during play-back, causing the needle to slide over surface rather than in groove.

S/N Ratio . . . In high-quality recording the speech-(signal) to noise ratio is an important factor, and it is advisable

to put as high an undistorted level as possible on the blank, which will minimize surface-noise in reproduction, and also to use correct equalization.

Slow-Speed Recording . . . In 33⅓ r.p.m. disc recording particular attention should be paid to (a) proper equalization, as the decreased linear velocity results in squeezing-up the high-frequency waveforms, and (b) the use of a sapphire or stellite stylus, because the ordinary steel stylus will produce noisy grooves, due to the slow linear velocity causing the coating material to tear slightly rather than cut smoothly.

Solid Stock . . . A loaded shellac composition (e.g., slate dust, 56; rosin 4, lamp-black 1.5; cotton flock, 0.5; plus orange lac 22; and T.N. shellac, 16—all figures per cent), used for the production of pressings in quantity.

Sputtering . . . In processing, the method of placing the original recording in a vacuum chamber, where it undergoes electronic bombardment, i.e., a film of gold, a few millionths of an inch thick, is deposited on the record surface, thus ensuring conduction for the electrolytic copper-plating step that follows.

Stamper . . . In processing, the negative die (made by electro-plating the mother with copper and/or chromium), which is locked in a hydraulic press and applied to the solid-stock to produce the familiar pressing.

Stereophonic . . . Term applied to reproduced sound in which the illusion of auditory perspective is obtained.

Stylus . . . The tool, usually steel, stellite or sapphire, for cutting the groove. Sapphire styli cut a groove 4 to 6 db. quieter than the steel types, but they require more skill in use to prevent tip damage. Plural, Styli.

Take . . . The making of a recording, namely, a good take, or a bad take.

Test Records . . . Provide a convenient A.C. source for determining the output characteristics of pickups, amplifiers, loudspeakers, etc., and in other sound measurements.

Thread . . . The disc coating removed by the stylus in cutting the groove. The metal or glass-base makes the nitrocellulose, and similar coated, blanks safe, but the thread shavings are highly inflammable, and should be disposed of under water, as soon as possible. A dry can full of thread is not safe. Also known as Chip, Spew, Sward and scrap.

Thread Control . . . Methods of controlling the removed coating thread are (a) hand-brush, (b) automatic brush or shipchaser, (c) suction device or compressed air stream, and (d) a new method of covering the blank(s) about five minutes before cutting, with a solution consisting chiefly of distilled water and leaving to dry. Other ingredients added to the solution (which largely overcomes the electro-static charge problem) are a proprietary detergent, e.g., "Aquasol" (1 drop in 0.25 pint), or a minute quantity of high-grade soap, plus a trace of colloidal graphite.

Tone . . . Strictly, a sound wave of one frequency, but the term is loosely applied to any steady complex tone or musical combination of complex tones. Erroneously applied to the quality of sound reproduction.

Tone Arm . . . The coupling device between the sound-box and horn of a mechanical (acoustic) gramophone. When the so-called tone-arm was invented, to enable the horn proper to remain at rest during the traverse of the sound-box across the record, it was claimed that the tone of the reproduction was improved—hence its name. Commonly used as a synonym for pick-up carrying-arm or tracking arm.

Tracing Distortion . . . Is harmonic distortion in record reproduction due to the pick-up stylus tip size.

Transducer . . . Any device that accepts and delivers power associated with any kind of vibration, acoustical, mechanical or electrical. The input and output powers may be of the same or of different forms.

Transformer . . . An electro-magnetic device for separating circuits while allowing the flow of power from one to another. Also used for matching impedances.

Translation Loss . . . Is the difference between the reproduced levels at two different but equally modulated radi of a record, i.e., the difference between the play-back losses in the two radii.

Transmission Factor . . . Of a record, may be expressed as the ratio of needle amplitude to cutting stylus amplitude, and, although high, is not independent of frequency.

Turntable . . . The turntable can be considered as including the motor, which preferably should be an induction type (1/20 to ¼ h.p.) as the synchronous type, unless fitted with an elaborate damping system, is prone to "hunting" i.e., a periodic speed variation. The turntable itself should be a massive circular steel or cast aluminum plate running in a bronze sleeve bearing and a ball thrust bearing. It should be carefully machined and balanced; its mass provides the flywheel characteristic necessary for speed constancy.

Turntable Drive . . . There are many methods used to couple the motor to the turntable, e.g., (a) the direct drive from special low-speed motor; (b) the direct rim drive; (c) an accurate gear drive; (d) the two-speed rubber idler wheel drive; and (e) the belt drive, which is a very useful arrangement avoiding most of the disadvantages of the other methods, e.g., no transmission of motor vibration, neglibile slippage, and no special tension adjustments.

Unmodulated Groove . . . A silent groove, i.e., a groove cut without modulation applied to the cutting-head.

Variable-Pitch Recording . . . An old system intended to overcome the bass cut-off and short playing-time deficiencies of the normal record. The number of grooves is made capable of continuous adjustment to conform to the sound level at any period during the actual cutting. For example, for an organ pedal note the groove pitch would be widened to say, 50 grooves per inch, and for a violin passage the spacing would be reduced to, say, 150 grooves per inch.

Vertical Recording . . . The groove is perpendicular to the surface of the blank, i.e., the stylus moves up and down with modulation, producing a groove of variable depth and, as stylus is triangular, variable width. Employed mostly for electrical transcriptions. Also known as Contour or Hill-and-Dale recording.

Vinylite . . . A vinyl acetate plastic, used for making pressings, generally for electrical transcriptions and new microgroove records.

Volume Limiter . . . Circuit incorporated in a recording amplifier for automatic peak limiting, i.e., any sounds in excess of predetermined level will cause an instantaneous change in amplifier gain, and reduce the volume automatically to that level. Sudden peaks are thereby prevented from causing overcutting.

Volume Unit . . . A standard of zero reference level (one milliwatt passing in a circuit of 600 ohms impedance-level) introduced by the Bell Telephone Labs. This standard permits the expression "so many decibels above or below zero reference level" to be contracted to "plus or minus vu/DB."

Walls . . . The sides of a groove.

Waveform . . . The shape of a sound wave, as depicted graphically or reproduced in a record groove.

Wear . . . Is as much a function of the recorded waveform and the type of pickup, needle, etc., as it is of the disc material; it is at a minimum when the mechanical impedance of the needle is nonreactive. The useful playing-life of a record, although arbitrary, is definite.

REFERENCE

"Manual of Direct Disc Recording," Bernards Ltd., London.

A BIBLIOGRAPHY OF MAGNETIC RECORDING

Spooner, T., "Properties and Testing of Magnetic Materials," McGraw-Hill, N. Y. (Publishers) 1927.

Frederick, H. A., "Recording and Reproducing Sound," Review Scientific Instruments, Vol. 5, pp. 177-182, 1928.

Meyer, E. and Schuller, E., "Magnetic Recording of Sound on Steel Ribbons," (in German) Zeitschrift fur technische Physik, Vol. 13, December 1932, pp. 593-599.

Hickman, C. H., "Delayed Speech," Bell Labs. Record, Vol. 11, June 1933, pp. 308-310.

"Magnetic Recording & Reproducing," Wireless World, Vol. 34, Jan. 5, 1934, pp. 8-10.

Rust, N. M., "Marconi-Stille Recording and Reproducing Equipment," Marconi Review, January-February 1934, pp. 1-11.

von Braunmuhl, H. J., "Magnetic Sound Recording in Broadcasting," (in German) Funktechnische Vorwarts, 1935, Vol. 5, No. 4.

Mallina, R. F., "A Mirror for the Voice," Bell Labs. Record, Vol. 13, March, 1935, pp. 200-202.

Schrage, W. E., "Play-back Recording Methods for Broadcasting," Electronics, Vol. 8, June, 1935, p. 179.

Volk, T., "Magnetophone, A New Sound Recording Apparatus," (in German) Filmtechnik, Vol. 2, October 26, 1935, pp. 229-231.

Hansen, W. H., "The Magnetophone," E.T.Z., Vol. 56, Nov. 7, 1935, p. 1232.

Begun, S. J., "New Lorenz Steel Tone Tape Machine," (in German) Lorenz Berichte, Jan. 1936, p. 3.

Begun, S. J., "New Lorenz Steel Tone Tape Machine," Elect. Communication, Vol. 15, July, 1936, pp. 62-69.

"An Experimental Telegraphone," Mechanics and Handicraft (U.S.A.), July, 1936, pp. 90-93, 104.

"Sound Recording on Magnetic Tape," Bell System Technical Journal, Vol. 16, April, 1937, pp. 165-177.

Begun, S. J., "Recent Developments in Magnetic Sound Recording," Journal of the Society of Motion Picture Engineers, Vol. 28, May, 1937, pp. 464-472.

Begun, S. J., "Magnetic Recording and Reproducing Machine for Objective Speech Study," Journal of the Society of Motion Picture Engineers, Vol. 29, August 1937, pp. 216-218.

Malloy, T. J., "A Magnetic Recorder," Electronics, Vol. 11, Jan. 1938, pp. 30-32.

Nagai, Kenzo, Sasaki, Siro, and Endo, Junosuke, "Experimental Consideration Upon the A.C. Erasing on the Magnetic Recording and Proposition of the New Recording Method," (in Japanese), Journal of the Inst. of Electrical Communication Engineers of Japan, No. 180, March, 1938.

Barrett, A. E., and Tweed, C. J. F., "Some Aspects of Magnetic Recording and its Application to Broadcasting," I.E.E. Journal, Vol. 82, March 1938, pp. 265-285.

Begun, S. J., and Wolf, S. K., "On Synthetic Reverberation," Communications, Vol. 18, August 1938, pp. 8-9.

Begun, S. J., "Magnetic Recording," Electronics, Vol. 11, September 1938, pp. 30-32.

Meyer, E., "Electro-Acoustics," G. Bell & Sons, Ltd. (publishers) 1939, pp. 79-85.

Aldous, D. W., "Steel Tape Recording (Textophone)," Wireless World, Vol. 44, June 29, 1939, pp. 611-612.

Mansi, R. L., "Construction of Apparatus for Recording Sound on Steel Wire," Electronics and Television and S. W. World, January, February, March, 1940.

Begun, S. J., "Magnetic Recording and Some of its Applications in the Broadcasting Field," Proceedings I.R.E., Vol. 29, August, 1941, pp. 423-433.

"The Mirrorphone," Wireless World, Vol. 48, February, 1942, pp. 42-43.

Olson, A. O., "Magnetic Wire Medium for Home Movies," Home Movies, Vol. 10, Sept., 1943, pp. 280-281 and 297-298.

"Wire Recorders for Army," Electronics, Vol. 16, October, 1943, pp. 234-236.

Olson, A. O., "Magnetic Recording of Sound," Home Movies, Vol. 10, October 1943, pp. 319, 330-331.

Camras, M., "A New Magnetic Wire Recorder," Radio News (Radionics Section, Vol. 1), Vol. 30, November 1943, pp. 3-5, 39.

Pugsley, D. W., "Engineering Details of Magnetic Wire Recorder," Electronic Indust., Vol. 3, January, 1944, pp. 116-118.

Selby, M. C., "Investigation of Magnetic Tape Recorders," Electronics, Vol. 17, May, 1944, pp. 133-135.

Pugsley, D. W., "Fundamentals of Magnetic Recording," Q.S.T., Vol. 28, May, 1944, pp. 10-12.

"B.B.C. Mobile Recording Equipment," Wireless World, Vol. 50, May, 1944, pp. 133-135.

Aldous, D. W., "Magnetic Recording," Electrician, Vol. 133, August 18, 1944, pp. 138-140.

Ashman, G. L., "Magnetic Recording," Wireless World, Vol. 50, August, 1944, pp. 226-228.

Brailsford, F., "Magnetic Materials," Electronic Engineering, Vol. 17, September, pp. 142-145; October, pp. 192-195; November, pp. 248-250 (1944).

Toomin, H., and Wildfeuer, D., "The Mechanism of Supersonic Frequencies as Applied to Magnetic Recording," Proceedings I.R.E., Vol. 32, November, 1944, pp. 664-668.

"Electronic Principles for Steel Wire Recorder," Elect. News and Engineering, Vol. 54, May 1, 1945, pp. 49-51.

Winter, C. W., "Magnetic Tape Recording," Radio News, June, 1945, pp. 32-34, 138, 140, 141.

Holmes, L. C., and Clark, Donald L., "Supersonic Bias for Magnetic Recording," Electronics, July, 1945, pp. 126-136.

Brooker, V. M., "Some Aspects of Sound Recording," Proceedings, Inst., Radio Engineers (Australia), Vol. 6, No. 3, September, 1945, pp. 3-9.

Schaper, H. B., "Frequency-Modulated Magnetic Tape Transient Recorder," Proceedings I.R.E., Vol. 33, November, 1945, pp. 753-760.

Holmes, L. C., "High Quality Sound Recording on Magnetic Wire," Communications, Vol. 25, No. 12, December, 1945, pp. 44, 46.

Tinkham, R. J., "Multiple Wire Recording," Communications, Vol. 25, No. 12, December, 1945, p. 99.

Long, T. H., "A B-H Curve Tracer for Magnetic Recording Wire," Electrical Engineering, Vol. 65, March, 1946 (Trans.), pp. 146-149.

Begun, S. J., "Magnetic Recording," (Summary), Communications, Vol. 26, No. 14, April, 1946, p. 30, et. seq.

Wooldridge, D. E., "Signal and Noise Levels in Magnetic Tape Recording," Electrical Engineering, Vol. 65, June, 1946 (Trans.), p. 343-352.

Power, R. A., "The German Magnetophone," Wireless World, Vol. 52, June, 1946, pp. 195-198.

Camras, M., "Theoretical Response from a Magnetic Recorder," Proceedings I.R.E. (W. and E.), Vol. 34, No. 8, August, 1946, pp. 597-602.

"German Magnetic Recorders. The Magnetophone K.7," B.B.C. Research Dept. Report No. C.053/3, October 1946.

Randall, C., "Magnetic Sound on Film (8 mm., and 16 mm. and 35 mm.)," Home Movies, Vol. 13, No. 12, December, 1946, pp. 748, 772-773.

Vaile, R. B. Jr., "Recent Developments in Magnetic Recording of Sound," Proc. Nat. Electronics Conference, Chicago, Autumn, 1946, Vol. 2, pp. 597-602.

Rosenstein, A. B., "Principles and Methods of Magnetic Recording," Radio News (Radio-Electronic Engineering Edition), December, 1946, pp. 3-6, 29.

Sear, A. W., "Wire Recorder Wow," Journal, Acoustical Society of America, Vol. 19, No. 1, January, 1947, pp. 172-178.

by Various Authors, "Summaries of Papers on Aspects of Magnetic Recording," Journal, Acoustical Society of America, Vol. 19, No. 1, January, 1947, pp. 283-293.

Begun, S. J., "Recent Developments in the Field of Magnetic Recording," Journal Society of Motion Picture Engineers, Vol. 48, No. 1, pp. 1-13.

Tinkham, R. J., Boyers, J. S., "A Magnetic Sound Recorder of Advanced Design," Journal, Society of Motion Picture Engineers, Vol. 48, No. 1, pp. 29-35.

Howell, H. A., "Magnetic Sound Recording on Coated Paper Tape," Journal. Society of Motion Picture Engineers, Vol. 48, No. 1, pp. 36-46.

Camras, M., "Magnetic Sound for Motion Pictures," Journal Society of Motion Picture Engineers, Vol. 48, No. 1, pp. 14-24, (Discussion, pp. 25-28).

Clears, G. T., "Magnetic Recording, Reproduction Data," International Projectionist, Vol. 22, No. 2, Feb. 1947, p. 14.

"Magnetic Paper Tape Recorder," Radio News (Radio-Electronic Engineering Edition), March, 1947, pp. 15 and 23.

Camras, M., "Recent Developments in Magnetic Recording for Motion Picture Film," Journal, Acoustical Society of America, Vol. 19, No. 2, March 1947, p. 322.

James, J. H. "Magnetic Playback Recorder, using Paper Disc," Communications. Vol. 27, No. 4, April, 1947, p. 32.

Ranger, R. H., "Design of Magnetic Tape Recorders," Tele-Tech, August, 1947, pp. 56-57, 99, 100.

Camras, M., "Magnetc Sound for 8 mm. Projection," Journal of the Society of Motion Picture Engineers, Vol. 49, Oct. 1947, pp. 348-356.

Hust, Lloyd B., "Build Your Own Magnetic Tape Recorder," Radio News, February, 1948.

Fleming, M., "Converting a Brush Tape Recorder for Broadcast Uses," Radio News. February, 1948.

Holmes, Lynn C., "Evaluation of the Application of New and Old Techniques to the Improvement of Magnetic Recording Systems (Abstract)," Proceedings N.E.C., November, 1948.

Boyers, J. S., "Factors Affecting Frequency Response and Distortion in Magnetic Recording," Audio Engineering, May, 1948.

Masterson, E., "35-mm Magnetic Recording System," Journal of the Society of Motion Picture Engineers, November, 1948.

Dimmick, G. L., and Johnson, S. W., "Optimum High-Frequency Bias in Magnetic Recording," Journal of the Society of Motion Picture Engineers, November, 1948.

Clears, G. T., "Quasi-Technical Discussion of Magnetic Recording," Radio News. February, 1948.

Read, O., "Recording and Reproduction of Sound; Design of Magnetic Tape Recorders," Radio News, February, 1948.

Goodell, John D., "Sound on Tape," Radio News (Eng. edition), February, 1948.

Carter, G. S., and Koontz, R., "Test Characteristics of Recording Wire," Tele-Tech, May, 1948.

Zenner, R. E. and Vaile, R. B., "Two-Channel Two-Way Drive Magnetic Recorder," Audio Eng., April, 1948.

Ledbetter, John B., "Adapting Home Recorders for Professional Use," Radio & Television News, February, 1949.

Boyers, J. S., "Factors Affecting Frequency Response and Distortion in Magnetic Recording," Audio Eng., May, 1948.

Camras, Marvin, "Graphical Analysis of Linear Magnetic Recording Using High-Frequency Excitation," IRE Proceedings, May, 1949.

Begun, S. J., "Limitations of Sound Recording," Communications, August, 1949.

Begun, S. J., "Magnetic Recording," Scientific Monthly, September, 1949. Also in FM-TV, May, 1949.

Frayne, J. G., and Wolfe, H., "Magnetic Recording in Motion Picture Techniques," Journal of the Society of Motion Picture Engineers, September, 1949.

Mueller, W. A., and Groves, G. R., "Magnetic Recording in the Motion Picture Studio," Journal of the Society of Motion Picture Engineers, June, 1949.

"Making Magnetic Recordings Visible," Audio Eng., April, 1949.

"Measuring Procedures for Magnetic Recording," Audio Eng., April, 1949.

Camras, M., "New Magnetic Record Duplicating Process," NEC Proceedings, 1949.

Gratian, J. W., "Noise in Magnetic Recording Systems as Influenced by the Characteristics of Bias and Erase Signals," Journal, Acoustical Society of America, March, 1949.

Camras, Marvin, "Stereophonic Magnetic Recorder," IRE Proceedings, April, 1949.

Holmes, L. C., "Techniques for Improved Magnetic Recording," Electrical Engineering, October, 1949.

Herr, R., "Duplication of Magnetic Tape Recordings by Contact Printing," Tele-Tech, November, 1949. Also in NEC Proceedings, 1949.

Stewart, W. E., "New Portable Tape Recorder Performs with Studio Quality," Tele-Tech, April, 1949. Also in Broadcast N, April, 1949.

Harris, C. C., "Portable Magnetic Tape Broadcasting Recorder," Communications, December, 1949.

Wroblewski, T., "Design Considerations for Magnetic Wire Recording," Sylvan Tech, January, 1949.

Zeluff, Vin, "Egg Records on Wire," Electronics, February, 1949.

"Magnetic Band and Wire Recorders," (Om Magnetiski Baand—og Traadoptagere) Radio Ekko, May, 1949.

Cooter, Irvin L., "Magnetic Fields Surrounding Recording Wires," Electrical Engineering, May, 1949.

Zeluff, Vin, "Wire Recorder Techniques," Electronics, January, 1949.

Zenner, R. E., "Magnetic Recording of Meter Data," Audio Engineering, February, 1950, pp. 16-17, 33.

Pauly, Walter W., "Studio Tape Recorder," FM-TV, February 1950, pp. 25-26.

Camras, Marvin, "Magnetic Sound on 8mm Film," Tele-Tech, May, 1950, p. 25-27.

Hare, D. G. C., and Fling, W. D., "Picture-Synchronous Magnetic Tape Recording," Journal of the Society of Motion Picture and Television Engineers, May, 1950 (Part I) p. 554-566.

Askew, William F., "Load Impedance Input for Brush Recorder," Tele-Tech, May, 1950, pp. 30-31.

Tall, Joel, "The Art of Tape Recording—1," Audio Engineering, May, 1950, pp. 13, 31-35.

Tall, Joel, "The Art of Tape Recording—2," Audio Engineering, June, 1950, pp. 20-22, 43-45.

Hildebrand, T. A., "A Magnetic Tape Eraser," TeleVision Engineering, June 1950, p. 21.

Tall, Joel, "The Art of Tape Recording—III," Audio Engineering, July, 1950, pp. 22-23, 39-40.

Tall, Joel, "The Art of Tape Recording—IV," Audio Engineering, August, 1950, pp. 16-18, 29-31.

Selsted, Walter T., "Synchronous Recording On ¼-In. Magnetic Tape," Journal of the Society of Motion Picture and Television Engineers, September, 1950, 279-284.

Tall, Joel, "The Art of Tape Recording—V," Audio Engineering, September, 1950, pp. 15, 42-45.

Hilker, Robert R., "Remote Start Switch for Brush Recorder," Tele-Tech, September, 1950, p. 43.

Rettinger, M., "A Magnetic Record-Reproduce Head," Journal of the Society of Motion Picture and Television Engineers," October, 1950, pp. 377-390.

Kolb, O. K., "Magnetic Sound Film Developments in Great Britain," Journal of the Society of Motion Picture and Television Engineers," November, 1950, 496-508.

Blakesley, Jay, "Performance Plus Economy Tape Recorder," Audio Engineering, November, 1950, pp. 20, 47-48.

Ryder, Loren L., "Motion Picture Studio Use of Magnetic Recording," Journal of the Society of Motion Picture and Television Engineers, December, 1950, pp. 605-612.

CONDENSER COLOR CODE

The RMA Standard Color Code is applied to fixed condensers and is similar to the Resistor color code (see page 124) with the exception that capacity values are expressed in micro-microfarads (MMFD).

(Note) To convert MFD to MMFD, move decimal point SIX places to RIGHT. To convert MMFD to MFD, move decimal point SIX places to LEFT. Thus, 0.00025 MFD is 250 MMFD: or 2000 MMFD is 0.002 MFD.

STYLE A. ONE row of Colored Dots
Voltage Rating—500 volts
Tolerance Rating— 20%

COLOR OF DOT	SIGNIFICANT FIGURE	DECIMAL MULTIPLIER	TOLERANCE % ±	VOLTAGE RATING
BLACK	0	1	—	—
BROWN	1	10	1	100
RED	2	100	2	200
ORANGE	3	1000	3	300
YELLOW	4	10,000	4	400
GREEN	5	100,000	5	500
BLUE	6	1,000,000	6	600
VIOLET	7	10,000,000	7	700
GRAY	8	100,000,000	8	800
WHITE	9	1,000,000,000	9	900
GOLD	—	0.1	5	1000
SILVER	—	0.01	10	2000
NO COLOR	—	—	20	500

EXAMPLE:

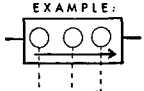

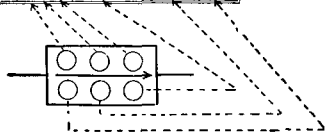

STYLE B TWO rows of Colored Dots
Voltage Rating—varies
Tolerance Rating—varies

EXAMPLE:

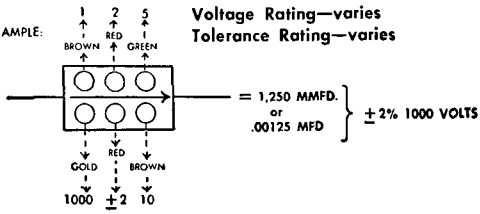

STYLE C. WIDE and NARROW Colored Bands
Voltage Rating—varies
Tolerance Rating—varies

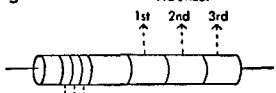

VOLTAGE RATING ← → DECIMAL MULTIPLIER

TOLERANCE %

EXAMPLE:

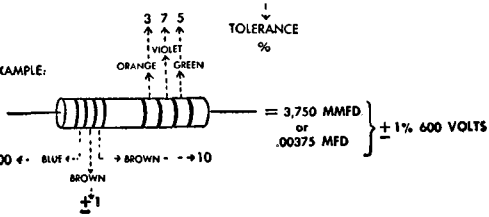

TRANSFORMER COLOR CODE

POWER TRANSFORMERS

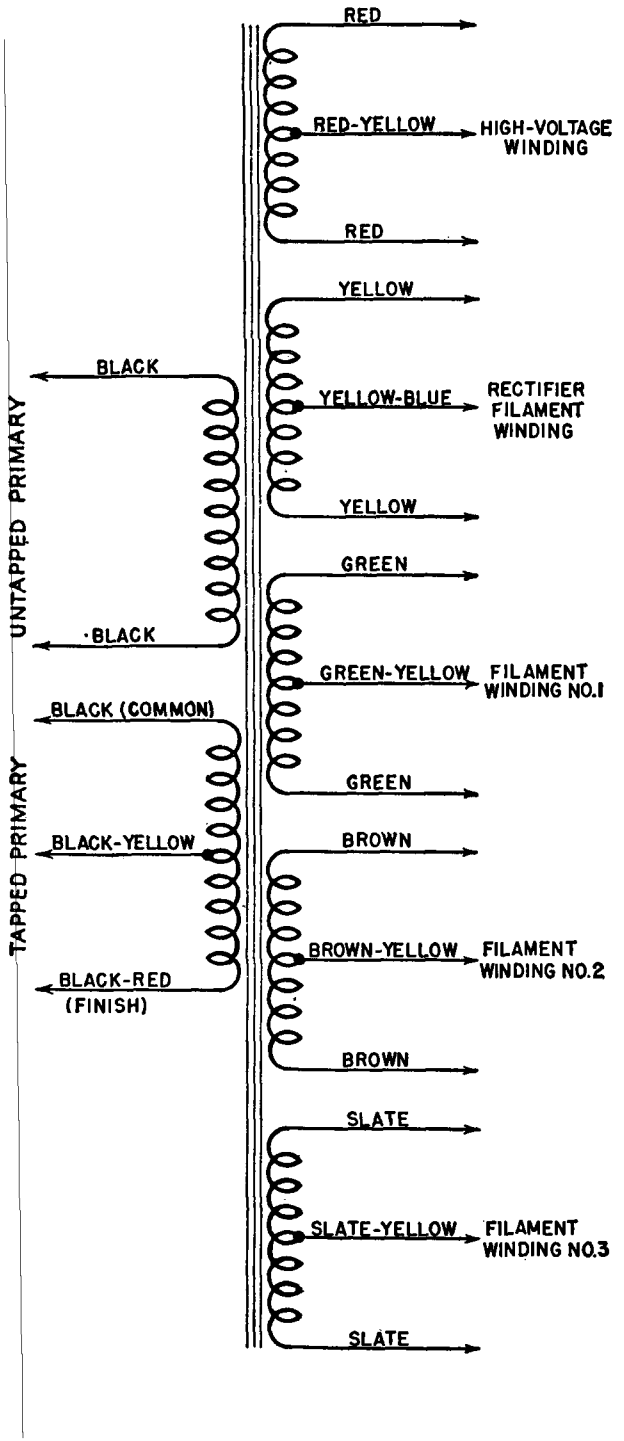

TRANSFORMER COLOR CODE

I.F. TRANSFORMERS

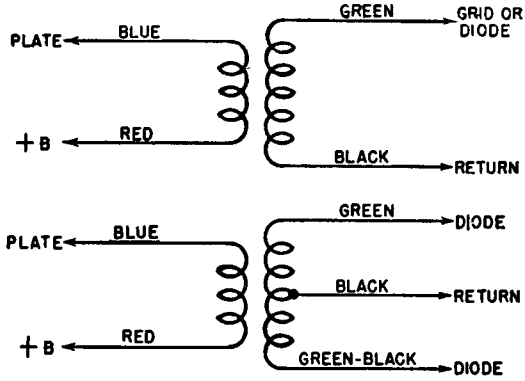

A.F. TRANSFORMERS

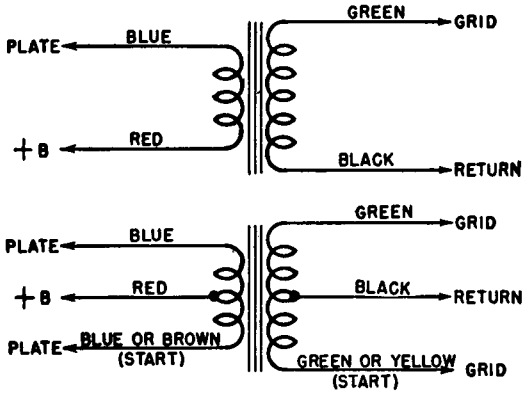

FIELD COILS

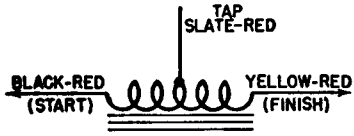

VOICE COILS

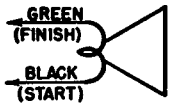

STANDARD RESISTANCE COLOR CODE

RESISTANCE	A	B	C	RESISTANCE	A	B	C
50 Ω	Gr.	Bla.	Bla.	25,000 Ω	Re.	Gr.	Or.
75 Ω	Vi.	Gr.	Bla.	30,000 Ω	Or.	Bla.	Or.
100 Ω	Br.	Bla.	Br.	40,000 Ω	Ye.	Bla.	Or.
150 Ω	Br.	Gr.	Br.	50,000 Ω	Gr.	Bla.	Or.
200 Ω	Re.	Bla.	Br.	60,000 Ω	Blu.	Bla.	Or.
250 Ω	Re.	Gr.	Br.	75,000 Ω	Vi.	Gr.	Or.
300 Ω	Or.	Bla.	Br.	100,000 Ω	Br.	Bla.	Ye.
350 Ω	Or.	Gr.	Br.	120,000 Ω	Br.	Re.	Ye.
400 Ω	Ye.	Bla.	Br.	150,000 Ω	Br.	Gr.	Ye.
450 Ω	Ye.	Gr.	Br.	200,000 Ω	Re.	Bla.	Ye.
500 Ω	Gr.	Bla.	Br.	250,000 Ω	Re.	Gr.	Ye.
600 Ω	Blu.	Bla.	Br.	300,000 Ω	Or.	Bla.	Ye.
750 Ω	Vi.	Gr.	Br.	400,000 Ω	Ye.	Bla.	Ye.
1,000 Ω	Br.	Bla.	Re.	500,000 Ω	Gr.	Bla.	Ye.
1,200 Ω	Br.	Re.	Re.	600,000 Ω	Blu.	Bla.	Ye.
1,500 Ω	Gr.	Br.	Re.	750,000 Ω	Vi.	Gr.	Ye.
2,000 Ω	Re.	Bla.	Re.	1 MEG Ω	Br.	Bla.	Gr.
2,500 Ω	Re.	Gr.	Re.	1½ MEG Ω	Br.	Gr.	Gr.
3,000 Ω	Or.	Bla.	Re.	2 MEG Ω	Re.	Bla.	Gr.
3,500 Ω	Or.	Gr.	Re.	3 MEG Ω	Or.	Bla.	Gr.
4,000 Ω	Ye.	Bla.	Re.	4 MEG Ω	Ye.	Bla.	Gr.
5,000 Ω	Gr.	Bla.	Re.	5 MEG Ω	Gr.	Bla.	Gr.
7,500 Ω	Vi.	Gr.	Re.	6 MEG Ω	Blu.	Bla.	Gr.
10,000 Ω	Br.	Bla.	Or.	7 MEG Ω	Vi.	Bla.	Gr.
12,000 Ω	Br.	Re.	Or.	8 MEG Ω	Gra.	Bla.	Gr.
15,000 Ω	Br.	Gr.	Or.	9 MEG Ω	Wh.	Bla.	Gr.
20,000 Ω	Re.	Bla.	Or.	10 MEG Ω	Br.	Bla.	Blu.

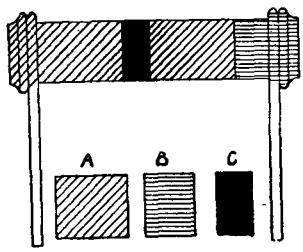

To identify a color coded resistor, locate the first two digits of the resistance value from Column A and B (Right). Find the number of zeros following the first two digits from Column C.

NEW Coding practice utilizes 3 or 4 BANDS instead of Body, Tip and Dot System. In this case, the first Band value is in Col. A—the second Band value is in Col. B—the third Band value is in Col. C—the fourth Band is the Tolerance Rating.

COLOR	Body A	Tip B	Dot or Band C
BLACK	0	0	None
BROWN	1	1	0
RED	2	2	00
ORANGE	3	3	,000
YELLOW	4	4	0,000
GREEN	5	5	00,000
BLUE	6	6	000,000
VIOLET	7	7	—
GRAY	8	8	—
WHITE	9	9	—
TOLERANCE RATINGS		5%	Gold
		10%	Silver
		20%	None

EXAMPLE—

A resistor having a
GREEN BODY or BAND
ORANGE TIP or BAND
YELLOW DOT or BAND
SILVER DOT or BAND
would have a resistance value of 530,000 ohms — Tolerance ± 10%.

HANDY FORMULAE
for
ELECTRONIC SERVICE ENGINEERS

Condensers:

In PARALLEL

$$TC = C_1 + C_2 + C_3, \text{ etc.}$$

In SERIES

$$TC \text{ (two Condensers)} = \frac{C_1 \times C_2}{C_1 + C_2}$$

$$TC \text{ (two or more)} = \frac{1}{\frac{1}{C_1} + \frac{1}{C_2} + \frac{1}{C_3}, \text{ etc.}}$$

(TC = Total Capacity)

Condenser Capacity:

The Capacitance of a Parallel Plate Condenser may be determined from;

$$C = 0.2235 \times \frac{KA}{d} \times (n\text{-}1) \text{ uufd.}$$

Where A is Area of one side of one plate in square inches.
n is the total number of Plates.
d is the separation between Plates in inches.
K is the Dielectric Constant (from published Tables).

Decibel:

The number of Decibels corresponding to a given *power* ratio is 10 times the common logarithm of the ratio, thus

$$DB = 10 \text{ Log}_{10} \times \frac{P_2}{P_1}$$

Example: What will be the gain in Decibels for an amplifier whose Output Power rises to 5 times that at the Input?

$$DB = 10 \text{ Log}_{10} \times \frac{10}{2} = 10 \text{ Log}_{10} \times 5 =$$

$$10 \times .7 = \text{Ans. } 7 \text{ DB}$$

The number of Decibels corresponding to a given *Voltage or Current* ratio is 20 times the common logarithm of the ratio, thus

$$DB = 20 \text{ Log}_{10} \times \frac{E_2}{E_1}$$

Example: What will be the gain in Decibels for an amplifier whose Output *Voltage* rises to 9 times that at Input?

$$DB = 20 \text{ Log}_{10} \times 9 = 20 \times 0.954 =$$

Ans. 19.08 DB

Gain—Amplifier Stage:

G = Gain
Mu = Amplification Factor
Rp = Plate Load
rp = A.C. Plate Resistance of Tube
G_m = Transconductance

$$G = Mu \frac{Rp}{rp + Rp} \text{ or } G = G_m \frac{rp \times Rp}{rp + Rp}$$

(See Note)

Note: The values for G_m, rp and Mu used in these equations are not necessarily the published values. They are the values which are measured under the circuit conditions imposed by the particular amplifier for which the calculated Gain is desired.

When eg expresses the RMS Effective Value of the A.C. (Signal) Input, the approx.,

$$\textit{Power Output} = \frac{Mu^2 \times eg^2 \times Rp}{(rp + Rp)^2}$$

(is non-reactive when the load)

and

$$\textit{Maximum Undistorted Power Output} = \frac{2Mu^2 \times eg^2}{9\ Rp}$$

$$\text{or} \quad \frac{2}{9} Mu \times eg \times G_m$$

When eg is the Maximum (Peak) A.C. (Signal) Input, then the approx.,

Maximum Undistorted Power Output =

$$\frac{Mu^2 \times eg^2}{9\ Rp}$$

Further, where Mu and rp are *Know*, G_m can be found from;

$$G_m = \frac{Mu}{rp}$$

G_m will be in mhos. Multiply mhos by 10^6 for micromhos.

From the above it will follow, that

$$Mu = G_m \times rp$$

and

$$rp = \frac{Mu}{G_m}$$

Impedance:

$$Z = \sqrt{R^2 + X^2} \quad \text{or}$$

$$Z = \sqrt{R^2 + (XL - Xc)^2} \quad \text{or}$$

$$Z = \sqrt{R^2 + \left(2\pi FL - \frac{1}{2\pi FC}\right)^2}$$

Impedance—of *Resistor*, plus *Either* a *Capacitive* or *Inductive* Reactance in *Parallel.*

$$Z = \frac{XR}{\sqrt{R^2 + X^2}}$$

It follows then, that if R and Z are known;

$$X = \frac{ZR}{\sqrt{R^2 - Z^2}}$$

and

If Z and X are known;

$$R = \frac{XZ}{\sqrt{X^2 - Z^2}}$$

Impedance—(Equivalent) of a *Parallel Circuit.*

When an *Inductance* and a *Capacity* and a *Resistance* are connected in *Parallel,* the equivalent *Impedance* will be;

$$Ze = \frac{RX_CX_L}{\sqrt{(RX_L - RX_C)^2 + X_L^2 X_C^2}}$$

Inductance Calculation:

The lumped inductance for receiving and transmitting Coils may be calculated from;

$$L = \frac{0.2 \times A^2N^2}{3A + 9B + 10C}$$

Where L is the Inductance in Microhenries
A is the Mean Diameter of the coil in inches
B is the Length of Winding in inches
C is the Radial Depth of Winding in inches
N is the Number of Turns

Note:—The quantity C may be neglected if the coil is a single-layer solenoid, as is usually the case with coils for the high frequencies.

Example:—Assume that a coil having 30 turns of No. 30 d.s.c. wire is wound on a receiving coil having a diameter of 2 inches. Assume further, that this wire will occupy a length of ⅜ of an inch. Then

$$L = \frac{0.2 \times (2)^2 \times (30)^2}{(3 \times 2) + (9 \times .375)} =$$

Ans. 76.8 Microhenries

It is obvious, that the required *Physical Dimensions* of a Coil can be determined from the above equation, if the specific *Inductance* is known.

Multipliers:

Series Multipliers for Voltmeters.

Rm = Resistance of Meter
Rs = Series Resistor
E = New Voltage Range
Em = Original Voltage Range of Meter

$$Rs = Rm\left(\frac{E}{Em} - 1\right)$$

Shunt Multipliers for Ammeters.

Rs = Shunt Resistor
It = Total Current
Rm = Resistance of Meter
Im = Meter Current

$$Rs = \frac{RM}{\frac{It}{Im} - 1} \quad \text{and}$$

$$Im = \frac{RsIt}{Rm + Rs} \quad \text{and}$$

$$It = Im\,\frac{Rm + Rs}{Rs} \quad \text{and}$$

$$Rm = Rs\,\frac{It - Im}{Im}$$

Ohm's Law For Alternating Current:

Where:
E = Voltage
X = Reactance in Ohms
X_C = Capacitive Reactance in Ohms
X_L = Inductive Reactance in Ohms
Z = Impedance in Ohms
R = Resistance in Ohms
L = Inductance in Henries
C = Capacity in Farads
F = Frequency in Cycles per Second
$2\pi = 6.28$
I = Current in Amperes

$$E = IZ \qquad I = \frac{E}{Z}$$

$$E = IX \qquad I = \frac{E}{X}$$

$$E = I\sqrt{X^2 + R^2} \qquad I = \frac{E}{\sqrt{X^2 + R^2}}$$

$$E = I\sqrt{X_L - X_C + R^2}$$

$$I = \frac{E}{\sqrt{X_L - X_C)^2 + R^2}}$$

$$Z = \frac{E}{I} \quad \text{and} \quad X = \frac{E}{I}$$

Q Factor:

The Q of a coil or condenser generally expresses a factor of Merit. The ratio of Reactance to Resistance is known as the *Q Factor* (or Dissipation Factor).

For a *Coil*:

$$Q = \frac{\omega L}{R} \text{ (Where R and L are in Series)}$$

For a *Condenser*:

$$Q = \frac{1}{\omega RC} \text{ (Where R and C are in Series)}$$

For a *Condenser*:

$Q = \omega RC$ (Where R and C are in Parallel)

Where ω is $2\pi F$

L is Inductance in Henries
R is Resistance in Ohms
C is Capacity in Farads

Reactance—Capacitive

$$X_C = \frac{1}{2\pi FC}$$

X_C is Reactance in Ohms
F is Frequency in c.p.s.
C is Capacity in Farads

Reactance—Inductive

$$X_L = 2\pi FL$$

X_L is Reactance in Ohms
F is Frequency in c.p.s.
L is Inductance in Henries

Resonance:

$$F = \frac{10^3}{2\pi\sqrt{LC}} \quad \text{or} \quad F^2 = \frac{25330}{LC}$$

and

$$L = \frac{25330}{F^2C} \quad \text{or} \quad C = \frac{25330}{F^2L}$$

Where F is Frequency in Kilocycles
C is Capacity in Microfarads
L is Inductance in Microhenries
π is 3.1416

Example:—To what Frequency will a .000142 mfd. Condenser (142mmfd.), in parallel with a 180 Microhenry Coil, tune?

$$F = \frac{10^3}{6.28\sqrt{180 \times .000142}} = 1000 \text{ KC.} = 300 \text{ Meters}$$

Loud Speaker Impedance Matching:

Selecting the proper Plate-to-Voice Coil **(Output)** Transformer may be accomplished from:—

$$TR = \sqrt{\frac{Z_{vc}}{Z}}$$

Where, Z_p is the recommended Load Resistance for the Tube or Tubes used in the Output Stage of the Amplifier (from Manufacturer's published Tube Data) and, Z_{vc} is the Voice Coil Impedance of the Speaker (from Manufacturer's published Data). TR is Turns-Ratio.

Example:—What Turns-Ratio Output Transformer should be selected to match a 50L6GT to a 5 Ohm Speaker? A Load Resistance of 2000 Ohms for the 50L6GT is recommended by the Tube Manufacturer. Hence,

$$TR = \sqrt{\frac{2000}{5}} = \sqrt{400} = 20$$

A Transformer having a Turns-Ratio of 20:1 will therefore be suitable. Where such a transformer is not readily available it is best to practice to select one whose ratio is HIGHER than 20:1 rather than one of LOWER Ratio. A 24.5:1 would be satisfactory. The Transformer must, of course, have a Power Rating capable of handling the power required by the Speaker.

OHMS LAW

Simply Stated:

To cause a current of one ampere to flow through a resistance of one ohm, one volt is required.

Expressed in electrical abbreviations:

$$I = \frac{E}{R}$$

Where

I = current in amperes
E = e.m.f. in volts
R = resistance in ohms

Example:—When 5 volts are applied to a tube filament having a resistance of 20 ohms, what current will flow?

$$I = \frac{E}{R} = \frac{5}{20} = \frac{1}{4} = .25 \text{ amp. (Ans.)}$$

It follows by mathematical transposition then, that:

$$E = I \times R \quad \text{and}$$

$$R = \frac{E}{I}$$

Thus substituting the two known values in the formula, the third or unknown value can readily be determined.

Electricity flowing through a conductor is a source of power since work may be done if the current is made to flow through suitable apparatus.

The unit of electrical power is the watt and wattage is expressed by the formula:

$$[1] \quad W = E \times I$$

Substituting $\frac{E}{R}$ for I in the above equation we get

$$[2] \quad W = E \times \frac{E}{R} \text{ or } W = \frac{E^2}{R} \quad \text{and}$$

Substituting I × R for E in equation No. 1 we get

$$W = I \times R \times I \quad \text{or}$$
$$W = I^2 \times R$$

HANDY TABLE FOR DETERMINING
POWER — VOLTAGE — CURRENT — RESISTANCE
TO DETERMINE

	VOLTAGE IN VOLTS	CURRENT IN AMPERES	RESISTANCE IN OHMS	POWER IN WATTS
1	KNOWN	KNOWN	$\frac{E}{I}$	$E \times I$
2	KNOWN	$\frac{E}{R}$	KNOWN	$\frac{E^2}{R}$
3	KNOWN	$\frac{W}{E}$	$\frac{E^2}{W}$	KNOWN
4	$I \times R$	KNOWN	KNOWN	$I^2 R$
5	$\frac{W}{I}$	KNOWN	$\frac{W}{I^2}$	KNOWN
6	$\sqrt{R \times W}$	$\sqrt{\frac{W}{R}}$	KNOWN	KNOWN

WHERE . . . W = Power in Watts I = Current in amperes R = Resistance in ohms E = E.M.F. in Volts.

Locate the horizontal line in which the two KNOWN values appear, andthe formula for the two remaining UNKNOWN values will be found in the proper column.

Example:—Assuming that you known the current to be 2.5 amperes and the power 75 watts; the voltage and resistance may be found from the respective formulas in line 5.

The Voltage will be $\frac{W}{I}$ or $\frac{W}{I} = \frac{75}{2.5}$ or 75 divided by 2.5 = 30 volts (Ans.)

and the resistance will be $\frac{W}{I^2}$ or $\frac{W}{I^2} = \frac{75}{(2.5)^2}$ or 75 divided by 2.5x2.5 = 12 ohms (Ans.)

MULTIPLES AND SUB-MULTIPLES

Ampere
a. = 1,000,000 microamperes

Ampere
a. = 1,000 milliamperes

Cycle
c.p.s. = 0.000,001 megacycle

Cycle
c.p.s. = 0.001 kilocycle

Farad
fd. = 1,000,000,000,000 micro-microfarads

Farad
fd. = 1,000,000 microfarads

Farad
fd. = 1,000 millifarads

Henry
h. = 1,000,000 microhenrys

Henry
h. = 1,000 millihenrys

Kilocycle
kc. = 1,000 cycles

Multiples and Sub-Multiples (Cont'd.)

Kilovolt
kv. = 1,000 volts
Kilowatt
kw. = 1,000 watts
Megacycle
mc. = 1,000,000 cycles
Megohm
meg. = 1,000,000 ohms
Mho
mho. = 1,000,000 micromhos
Mho
mho. = 1,000 millimhos
Microampere
μa. = 0.000,001 ampere
Microfarad
μfd. = 0.000,001 farad
Microhenry
μh = 0.000,001 henry
Micromho
μmho. = 0.000,001 mho
Micro-ohm
μohm = 0.000,001 ohm
Microvolt
μv. = 0.000,001 volt
Microwatt
μw. = 0.000,001 watt
Micromicrofarad
$\mu\mu$fd. = 0.000,000,000,001 farad
Micromicro-ohm
$\mu\mu$a. = 0.000,000,000,001 ohm
Milliampere
ma. = 0.001 ampere
Millihenry
mh. = 0.001 henry
Millimho
mmho. = 0.001 mho
Milliohm
mohm. = 0.001 ohm
Millivolt
mv. = 0.001 volt
Milliwatt
mw. = 0.001 watt
Volt
v. = 1,000,000 microvolts
Volt
v. = 1,000 millivolts
Watt
w. = 1,000,000 microwatts
Watt
w. = 1,000 milliwatts
Watt
w. = 0.001 kilowatt

Mathematical Symbols

$\times$ or $\cdot$	Multiplied by
$\div$ or $:$	Divided by
$+$	Positive. Plus. Add
$-$	Negative. Minus. Subtract
$\pm$	Positive or negative. Plus or minus
$\mp$	Negative or positive. Minus or plus
$=$ or $::$	Equals
$\equiv$	Identity
$\cong$	Is approximately equal to
$\neq$	Does not equal
$>$	Is greater than
$\gg$	Is much greater than
$<$	Is less than
$\ll$	Is much less than
$\geqq$	Greater than or equal to
$\leqq$	Less than or equal to
$\therefore$	Therefore
$\angle$	Angle
Δ	Increment or Decrement
$\perp$	Perpendicular to

Mathematical Constants

$\pi = 3.14$	$\sqrt{\pi} = 1.77$
$2\pi = 6.28$	$\sqrt{\frac{\pi}{2}} = 1.25$
$(2\pi)^2 = 39.5$	$\sqrt{2} = 1.41$
$4\pi = 12.6$	$\sqrt{3} = 1.73$
$\pi^2 = 9.87$	$\frac{1}{\sqrt{2}} = 0.707$
$\frac{\pi}{2} = 1.57$	$\frac{1}{\sqrt{3}} = 0.577$
$\frac{1}{\pi} = 0.318$	$\log \pi = 0.497$
$\frac{1}{2\pi} = 0.159$	$\log \frac{\pi}{2} = 0.196$
$\frac{1}{\pi^2} = 0.101$	$\log \pi^2 = 0.994$
$\frac{1}{\sqrt{\pi}} = 0.564$	$\log \sqrt{\pi} = 0.248$

FUNDAMENTAL ELECTRICAL LAW

Ohm's Law

When a continuous current is flowing through a given conductor, whose temperature is maintained constant, the ratio of the potential difference or voltage existing between the conductor terminals and the current carried by the conductor is a constant, no matter what the value of the current may be. The mathematical formulae for Ohm's Law may be expressed in the following forms:

$$R = \frac{E}{I} \qquad I = \frac{E}{R} \qquad E = IR$$

Where R = resistance expressed in ohms

I = current expressed in amperes

E = potential difference or voltage in volts

A practical example is given to illustrate the use of Ohm's Law:

If the screen current for a certain tube is 2 milliamperes (0.002 ampere) what value of resistance should be used to reduce the screen voltage to 90 volts from a supply voltage of 250 volts?

Solution: The required voltage drop across the resistor would be 250 — 90 or 160 volts.

Therefore

$$R = \frac{E}{I} = \frac{160 \text{ volts}}{0.002 \text{ ampere}} = 80{,}000 \text{ ohms}$$

Power

Power is the time rate of doing work. Since energy is the ability to do work, power may also be defined as the time rate of expending energy. From the fundamental definitions of power, electromotive force and current it is easy to show that power may be computed from the following expression:

$$P = EI$$

If E is expressed in volts and I in amperes then the power P will be given in watts. Using values for E or for I from Ohm's Law, the above expression becomes either:

$$P = I^2 R \qquad \text{or} \qquad P = \frac{E^2}{R}$$

If the first equation for power is used, the wattage rating of the resistor used for reducing the screen voltage may be computed.

$$P = EI = 160 \text{ volts} \times 0.002 \text{ ampere} = 0.32 \text{ watt}$$

A 0.5 watt resistor should be employed.

Resistors Connected in Series and in Parallel:

When two or more resistors are connected in series, so that the same current flows through each resistor, the total effective resistance (Rt) of the network will be the sum of the separate resistances. Thus:

$$Rt = R_1 + R_2 + R_3 + \ldots.$$

If a number of resistors are connected in parallel so that the voltage drop is the same across each resistor, then the current in each resistor will be inversely proportional to the resistances. The total effective resistance (Rt) of the network, will be given by:

$$1/Rt = 1/R_1 + 1/R_2 + 1/R_3 + \ldots.$$

For the case of two resistors in parallel:

$$Rt = \frac{R_1 \; R_2}{R_1 + R_2}$$

Calculation of Condensers in Series and in Parallel:

When a number of condensers are connected in series, the total effective capacity (Ct) is computed from the relation:

$$1/Ct = 1/C_1 + 1/C_2 + 1/C_3 + \ldots.$$

For the case of two condensers connected in series this expression reduces to the form:

$$Ct = \frac{C_1 \; C_2}{C_1 + C_2}$$

The total capacity (Ct) of any number of condensers connected in parallel is the sum of the separate capacities:

$$Ct = C_1 + C_2 + C_3 + \ldots.$$

Calculation of Proper Resistor For Self-Biasing:

From Ohm's Law

$$R = \frac{\text{Grid Bias in Volts} \times 1000}{\text{Total Cathode Current in Ma.} \times \text{Number of Tubes Involved}}$$

For triodes the total cathode current is equal to the plate current.

For tetrodes and pentodes the total cathode current is the sum of the plate and screen currents.

For pentagrid converters the plate, screen and oscillator anode currents must be added to obtain the total cathode current.

Example: What biasing resistor is required for two Type 42 tubes operated in push-pull with 250 volts applied to the plates?

The following data are taken from the characteristics shown for Type 42:

Grid Bias = 16.5 Volts
Plate Current = 34.0 Ma.
Screen Current = 7.5 Ma.
Total Cathode Current = 41.5 Ma.

Hence:

$$R = \frac{16.5 \times 1000}{41.5 \times 2} = \frac{16500}{83} = 198 \text{ ohms}$$

When over-biased operation is employed the recommended bias resistor values will be specified under Ratings or Circuit Application notes for the tube type involved.

FUNDAMENTAL PROPERTIES OF VACUUM TUBES

The major operating characteristics of a vacuum tube can be expressed in terms of the amplification factor (μ), the dynamic plate resistance (R_p) and the mutual conductance (GM). When these are known one can make quantitative calculations of the tube performance under many conditions.

The **Amplification Factor** is defined as the ratio of a small increment in plate voltage to the corresponding change in grid voltage necessary to maintain constant plate current. In other words, it is the ratio of the effectiveness of the grid and plate voltages in producing electrostatic forces at the surface of the cathode. The amplification factor depends upon the configuration of the electrode system, especially the grid structure, and the electrode voltages. Changes which cause the grid to more completely shield the plate from the cathode will increase the value of μ.

The dynamic **Plate Resistance** may be defined as the ratio of a small change in plate voltage to the corresponding change in plate current produced. The value will depend upon the grid and plate voltages at the operating point under consideration. It will **not** be equal to the ratio of total plate voltage to total plate current. The dimensions and relative positions of the tube electrodes will largely determine the value of plate resistance.

The **Mutual Conductance** (GM), sometimes called control grid-plate transconductance (SM), is the ratio of the amplification factor to the plate resistance and represents the rate of change in plate current with respect to the change in grid voltage when the other voltages remain constant.

Interelectrode Capacities: The electrodes of a vacuum tube form a complicated electrostatic system and each element may be considered as forming one plate of a small condenser. In a

three-element tube the capacitance between the cathode and grid, between the grid and plate, and between the plate and cathode, are known as the interelectrode capacitances of the tube. Of these, the grid-plate capacity is generally the most important. The effect of these capacitances depends upon the relationship between their reactances and the associated external circuit impedances. Their effect is, therefore, a function of frequency and external load.

In multi-electrode tubes the number of separate interelectrode capacitances is larger than for a triode. Fortunately, only three of these direct interelectrode capacitances are of great importance in most applications. These are:

1. Grid-plate capacity (C_{GP}).
2. Direct input capacity from control grid to cathode plus all other electrodes except output plate.
3. Direct output capacity from plate to cathode plus all other electrodes except the input grid.

AMPLIFIER CLASSIFICATION

All radio receiving tubes except the rectifiers may be conveniently considered as amplifiers. Oscillators and detectors or frequency converters may be thought of as special cases of amplifiers in which use is made of the non-linear relations between the input voltages and output currents of the tube under consideration.

There are three major classes of amplifier service. Definitions describing these have been standardized by the Institute of Radio Engineers.

Class A Amplifier

A Class A, or Class A1, amplifier is one in which the grid bias and signal voltages are such that the plate current in the tube, or in each tube of a push-pull stage flows at all times.

This is accomplished by operating at the center point of the plate current vs. grid voltage curve and using signal voltages which do not drive the grid into either the positive-region or into the sharp bend near cut-off voltage.

Class A2 Amplifier

A Class A2 amplifier is the same as a Class A1 amplifier except that the signal may drive the grid into the positive region. This is accomplished by operating at a lower bias than the center point which would have been selected for class A operation.

Class B Amplifier

A Class B amplifier is an amplifier in which the grid bias is approximately equal to the cut-off value, so that the plate current is approximately zero when no signal voltage is applied and so that plate current in the tube or in each tube of a push-pull stage, flows for approximately one-half of each cycle when an alternating grid voltage is applied.

An important characteristic is that the grid circuit draws appreciable power which prevents it from being used with ordinary resistance coupled driver tubes.

Class AB1 Amplifier

A Class AB1 amplifier is one in which the grid bias and peak signal voltage are in such proportion that it operates as a Class A amplifier for small signals and as a Class B Amplifier for large signals.

Class AB2 Amplifier

A Class AB2 amplifier is one in which the signal is allowed to drive the grid slightly into the positive region but not enough to require appreciable power from the driver.

This is accomplished by operating two tubes in push-pull at very nearly the cut-off bias and applying a peak signal equal to the bias. Resistance coupling may be used making this is the best way of obtaining large power output with low distortion. A good example of this rating may be found under Type 6L6G.

Class C Amplifier

A Class C amplifier is one in which the tubes operate at a bias much greater than cut-off voltage so that plate power is drawn only on the peaks of the signal voltage. It is not used in audio amplifiers because the distortion is too high but is the most efficient circuit for R. F. power amplifiers where the harmonics can be reduced by use of resonant circuits.

DEFINITIONS OF COMMON RADIO TERMS

Anode Current: The total current passing to or from an anode. In vacuum tube terminology this is called plate current. Symbol Ib.

Cathode Current: The total space current passing to or from the emitter. This should not be confused with filament current in filament type tubes. Symbol Ik.

Conversion Conductance: The ratio of the desired beat frequency component of the plate current to the signal voltage applied to the grid. It is expressed in micromhos. Symbol G_c.

Coupling: The mutual relationship between circuits permitting a transfer of energy between them.

Degeneration: The result of a portion of the output signal appearing in the input circuit of a vacuum tube so as to reduce gain. It is sometimes introduced to stabilize the circuit and to improve the response. It may be called **negative or inverse feedback.**

Demodulation: The process of separating the modulation component from the carrier. It is commonly called detection.

Diode: A vacuum tube having two elements. It is usually used as a rectifier or detector. A **duo diode** is two diodes in one envelope; one element may or may not be common to both diodes.

Distortion: The change in wave form produced by the transmission device or amplifier.

Discriminator: A circuit which produces a DC voltage proportional in value and polarity to the variations in the applied frequency about the mean frequency, or which converts frequency modulated signals directly into audio frequency signals.

Electron Emission: The liberation of electrons from a surface into the surrounding space. If accomplished under the influence of heat it is called **Thermionic Emission.** If due to the impact of other electrons, it is called **Secondary Emission.** When emission occurs from a grid from any cause, it is called **Grid Emission.**

Fidelity: The degree of accuracy of reproduction of the original signal.

Filter: A selective network or circuit designed to pass a certain frequency or band of frequencies and reject all others.

Frequency Deviation: The amount of instantaneous carrier frequency shift from the mean frequency due to modulation in frequency modulated transmitters.

Frequency Modulation: A method of transmitting intelligence by means of varying the frequency of a transmitter about the mean frequency in accordance with the signal it is desired to transmit.

Gain: The ratio of output to input signal. It may be expressed in terms of power or voltage. **Conversion gain** is the ratio of intermediate frequency output to signal frequency input.

Heptode: A seven element vacuum tube containing an anode, cathode and five other electrodes, usually grids. It is chiefly used as a converter or mixer.

Hexode: A six element vacuum tube containing an anode, cathode and four

other electrodes, usually grids. It is chiefly used as a converter or mixer.

Limiter: A circuit designed to prevent a signal from exceeding a pre-determined amplitude. The stage in a FM receiver used to remove any amplitude changes in the received signal.

Load Resistance: The total effective resistance in the plate circuit external to the tube.

Modulation: The process of varying the amplitude, phase, or frequency of a carrier in accordance with a signal. **Cross modulation** is an undesired process whereby the carrier of a desired signal combines with the modulation from an undesired signal. It usually occurs within the receiving device.

Modulation Factor: The ratio of half the difference between the maximum and minimum amplitudes of a modulated carrier to the average value. It is usually expressed in percent and called **modulation percentage.**

Octode: An eight element vacuum tube containing an anode, cathode and six other elements usually grids. It is usually used as a converter or mixer.

Oscillator: A vacuum tube device for generating alternating current. In superheterodyne receivers it is the portion of the circuit generating the local signal required to beat with the incoming signal to produce the intermediate frequency.

Peak Inverse Voltage: The maximum instantaneous recurring voltage developed in the opposite direction to that in which an electron tube is designed to pass current. In half-wave rectifiers the value may be 2.8 times the rms value of AC plate voltage.

Peak Plate Current: The instantaneous maximum recurring current flowing in an anode or plate circuit.

Pentagrid Converter: A vacuum tube having five grids. It is usually used as an oscillator-mixer in a superheterodyne receiver.

Pentode: A five element vacuum tube having an anode, a cathode and three grids.

Perveance: This is a figure of merit often used for diodes to express the ability to rectify high frequency current with low voltage drop. It corresponds roughly to 1/R in a linear conductor, but in a non-linear conductor such as a vacuum tube which does not follow Ohm's Law the corresponding characteristic is called Perveance. **High Perveance:** means optimum design for both low capacitance and low diode voltage drop for currents within the tube rating.

Phase Modulation: A method of modulating a carrier by shifting the phase of the carrier with respect to the non-modulated carrier.

Pip: A strong short pulse appearing on the screen of a cathode ray tube. It is often used as a marker.

Plate: The common name of the principal anode element in a vacuum tube.

Power Amplifier: An amplifier designed to deliver power as distinguished from a volage amplifier.

Power Output: The useful power developed in the output device or circuit. It is usually limited by permissible distortion.

Pulse: A single disturbance, such as half a square wave. **Grid pulsing** is a method of controlling a circuit by introducing a pulse into the grid circuit. **Plate Pulsing** is the same as grid pulsing except the pulse is introduced into the plate circuit.

Reactance Tube: A vacuum tube with operating conditions so chosen that the tube appears as an inductance or capacitance which can be varied by means of changes in the control voltage.

Rectifier: A device for converting alternating current into direct current by permitting much more current to flow in one direction than the other. A **half-wave rectifier** permits current flow only during one half of the cycle. A **full-wave rectifier** permits current flow from both halves of the cycle.

Regulation: The ratio between a reference voltage and change of voltage caused by the load. It is usually expressed in percent.

Ripple Voltage: The alternating component of the DC voltage after rectification or from a generator.

Selectivity: The ability of a circuit to choose between desired and undesired signals on adjacent frequencies.

Sensitivity: Is the term used to denote the ratio between input signal and output power. Generally expressed as microvolts per watt.

Side Bands: Those frequencies adjacent to, and associated with a carrier.

Space Charge: A cloud of electrons between elements of a vacuum tube.

Space Current: The current consisting entirely of the electron flow from a cathode to the anode and other positive elements in a vacuum tube.

Trigger Circuit: A circuit having two stable operating conditions readily changed from one to the other by a small change in operating conditions.

Triode: A three element vacuum tube having an anode, cathode and a control electrode.

Voltage Gain: The ratio of the voltage developed in the plate circuit to the grid voltage necessary to produce it. **Voltage Gain per stage** may be obtained from the formula:

$$\text{Gain} = \frac{\mu \times Z_p}{Z_p + R_p} = \frac{G_m \times R_p \times Z_p}{(Z_p + R_p) \times 10^6}$$

Where G_m is in micromhos; R_p and Z_p in ohms.

RESISTANCE COUPLED AMPLIFIER DATA

On the following pages are given the necessary data for the construction of resistance coupled amplifiers using the types of tubes commonly employed for this purpose. The data are necessarily quite condensed but with the aid of the five reference diagrams and the equations given on the following page for determining the size by-pass and coupling condensers, any technician should be able to build a good amplifier or check the design of one under repair.

Notice that data are given for use under all the B supply voltages commonly used with a given type. Values of gain are given for two different values of applied signal; the first a typical small signal likely to be found for the type and the second is the maximum which can be used without exceeding the 5% distortion limit.

Symbols Used

Symbol	*Function*	*Unit*
Rb	Plate Load Resistor	Megohms
Rc2	Screen Dropping Resistor	Megohms
Rcf	Grid Resistor of following Tube	Megohms
Ebb	Plate Supply Voltage	Volts
Eb	Plate Voltage at Plate	Volts
Ec or Ec1	Grid to Neg. Fil. Voltage	Volts
Ec2	Screen Grid Voltage	Volts
Esig	Input Signal	RMS Volts
Eout	Output to following Grid	RMS Volts
Ib	Plate Current	Ma.
Ic2	Screen Grid Current	Ma.
Cc	Coupling Condenser	mfd.
Cc2	Screen By-pass Condenser	mfd.

Values of capacity are not specified since these are dependent mostly on the

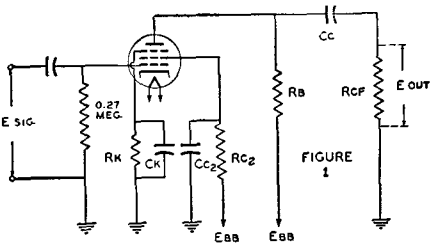

FIGURE 1

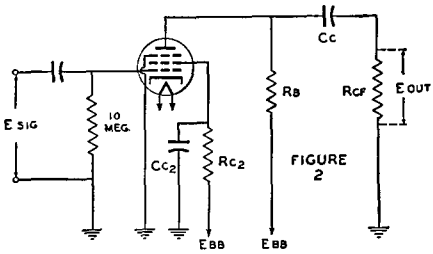

FIGURE 2

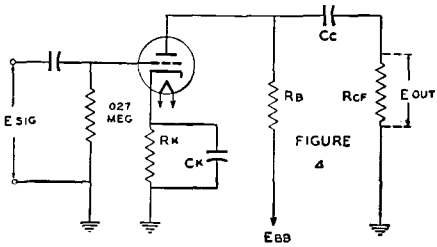

FIGURE 4

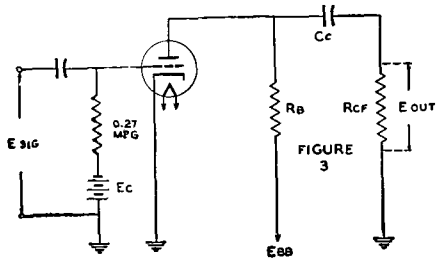

FIGURE 3

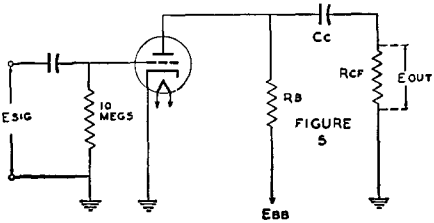

FIGURE 5

frequency characteristic required in each individual case.

For low frequency limit $= f_1$

$$Cc = \frac{1.6 \times 10^6}{f_1 \, Rcf} \text{ mfd.}$$

$$Ck = \frac{1.6 \times 10^6}{f_1 \, Rk} \text{ mfd.}$$

$$Cc2 = \frac{1.6 \times 10^6}{f_1 \, Rc2} \text{ mfd.}$$

Some text books show a more complicated method for calculating these by-pass condensers, but this method is quite rapid and gives conservative values. The loss due to incomplete by-passing will be less than 1% except for the cathode by-pass where it will be about 3%. The size condenser may be halved where economy is essential unless stages are cascaded and highest quality is required.

RESISTANCE COUPLED AMPLIFIER DATA

Zero Bias Operation

	Ebb = 45 VOLTS									Ebb = 67.5 VOLTS									Ebb = 90 VOLTS								
Rb	0.27			0.47			1.0			0.27			0.47			1.0			0.27			0.47			1.0		
Rc1	1.0			1.8			3.9			1.0			1.8			3.9			1.0			1.8			3.9		
Rcf	0.47	1.0	4.7	1.0	4.7	10	2.2	4.7	10	0.47	1.0	4.7	1.0	4.7	10	2.2	4.7	10	0.47	1.0	4.7	1.0	4.7	10	2.2	4.7	10
Ib	.080	.080	.080	.050	.050	.050	.025	.025	.025	.145	.145	.145	.087	.087	.087	.045	.045	.045	.22	.22	.22	.13	.13	.13	.065	.065	.065
Eb	23.4	23.4	23.4	21.5	21.5	21.5	20.0	20.0	20.0	28.3	28.3	28.3	26.6	26.6	26.6	22.5	22.5	22.5	30.5	30.5	30.5	29.0	29.0	29.0	25.0	25.0	25.0
Ic1	.0232	.0232	.0232	.0146	.0146	.0146	.0077	.0077	.0077	.041	.041	.041	.025	.025	.025	.013	.013	.013	.061	.061	.061	.036	.036	.036	.0187	.0187	.0187
Ec1	21.8	21.8	21.8	18.7	18.7	18.7	15.0	15.0	15.0	26.5	26.5	26.5	22.5	22.5	22.5	16.8	16.8	16.8	29.0	29.0	29.0	25.0	25.0	25.0	17.0	17.0	17.0
Esig	0.05	0.05	0.05	0.05	0.05	0.05	0.05	0.05	0.05	0.1	0.1	0.1	0.1	0.1	0.1	0.1	0.1	0.1	0.1	0.1	0.1	0.1	0.1	0.1	0.1	0.1	0.1
Eout	1.55	1.94	2.25	2.15	2.75	2.85	2.80	3.25	3.50	4.10	5.0	5.7	5.5	6.8	7.0	7.1	8.2	8.65	4.9	6.0	6.9	6.65	8.35	8.7	9.0	10.4	11.0
Gain	31.0	38.8	45.0	43.0	55.0	57.0	56.0	65.0	70.0	41.0	50.0	57.0	55.0	68.0	70.0	71.0	82.0	86.5	49.0	60.0	69.0	66.5	83.5	87.0	90.0	104	110
% Distortion	2.10	1.90	1.20	2.00	1.70	1.60	2.90	2.40	2.0	1.80	1.30	1.60	1.70	2.0	2.1	2.30	2.50	2.70	80	1.40	2.0	1.70	3.10	3.50	3.0	3.30	3.60
Esig (1)	0.13	0.17	0.19	0.12	0.15	0.15	0.1	0.11	0.11	0.26	0.28	0.30	0.21	0.23	0.24	0.15	0.17	0.17	0.34	0.34	0.34	0.28	0.28	0.28	0.18	0.18	0.17
Eout	3.95	6.0	7.55	5.0	7.40	7.6	5.60	6.50	6.90	9.85	12.6	15.2	10.4	13.9	14.8	10.0	12.8	13.4	14.4	17.5	20.0	16.5	20.5	21.0	15.1	17.4	17.6
Gain	30.4	35.3	39.7	41.6	49.3	50.6	56.0	59.0	62.7	37.9	45.0	50.6	49.6	60.3	61.8	66.8	75.3	78.8	42.4	51.5	58.9	59.0	72.5	75.0	84.0	96.8	103.5
% Distortion	4.90	4.60	4.70	4.60	4.90	4.60	4.70	4.80	4.70	4.80	4.60	4.80	4.50	4.50	4.90	4.40	4.90	4.60	4.40	4.50	5.0	4.60	4.50	4.80	4.70	4.90	4.80

Note (1) Maximum signal for 5.0% distortion.

FOR CIRCUIT SEE FIGURE 2

RESISTANCE COUPLED AMPLIFIER DATA

Zero Bias Operation

	Ebb = 45 VOLTS									Ebb = 67.5 VOLTS									Ebb = 90 VOLTS								
Rb	0.27			0.47			1.0			0.27			0.47			1.0			0.27			0.47			1.0		
Rc1	1.5			2.7			5.6			1.5			2.7			5.6			1.5			2.7			5.6		
Rcf	0.47	1.0	4.7	1.0	4.7	10.0	2.2	4.7	10.0	0.47	1.0	4.7	1.0	4.7	10.0	2.2	4.7	10.0	0.47	1.0	4.7	1.0	4.7	10.0	2.2	4.7	10.0
Ib (1)	0.066	0.066	0.066	0.043	0.043	0.043	0.023	0.023	0.023	0.125	0.125	0.125	0.077	0.077	0.077	0.04	0.04	0.04	0.189	0.189	0.189	0.114	0.114	0.114	0.059	0.059	0.059
Eb	27.2	27.2	27.2	24.8	24.8	24.8	22.0	22.0	22.0	33.7	33.7	33.7	31.3	31.3	31.3	27.5	27.5	27.5	39.0	39.0	39.0	36.4	36.4	36.4	31.0	31.0	31.0
Ic1	0.0142	0.0142	0.0142	0.009	0.009	0.009	0.0048	0.0048	0.0048	0.0259	0.0259	0.0259	0.0159	0.0159	0.0159	0.0082	0.0082	0.0082	0.0385	0.0385	0.0385	0.023	0.023	0.023	0.012	0.012	0.012
Ec1	23.7	23.7	23.7	20.7	20.7	20.7	18.1	18.1	18.1	28.6	28.6	28.6	24.5	24.5	24.5	21.6	21.6	21.6	32.2	32.2	32.2	27.9	27.9	27.9	22.8	22.8	22.8
Esig	0.05	0.05	0.05	0.05	0.05	0.05	0.05	0.05	0.05	0.1	0.1	0.1	0.1	0.1	0.1	0.1	0.1	0.1	0.1	0.1	0.1	0.1	0.1	0.1	0.1	0.1	0.1
Eout	1.46	1.75	2.10	2.0	2.54	2.62	2.47	2.97	3.24	4.05	4.82	5.50	5.45	6.8	7.05	6.85	8.4	8.9	4.9	5.7	6.75	6.65	8.45	8.75	8.55	10.4	10.8
Gain	29.2	35.0	42.0	40.0	50.8	52.4	49.5	59.4	64.8	40.5	48.2	55.0	54.5	68.0	70.5	68.5	84.0	89.0	49.0	57.0	67.5	66.5	84.5	87.5	85.5	104.0	108.0
% Distortion	2.2	1.9	1.5	2.4	2.0	1.7	3.1	2.2	2.1	2.3	1.8	1.6	3.1	2.3	2.2	4.0	3.2	2.8	1.1	0.9	0.7	2.0	1.2	1.2	2.4	1.7	1.7
Esig (2)	0.11	0.11	0.12	0.09	0.1	0.1	0.07	0.08	0.08	0.17	0.18	0.20	0.14	0.16	0.17	0.11	0.13	0.13	0.24	0.27	0.28	0.19	0.22	0.22	0.15	0.17	0.18
Eout	3.06	3.80	4.75	3.5	4.83	5.03	3.37	4.66	4.93	6.50	8.35	10.3	7.36	10.1	11.1	7.47	10.6	10.9	10.9	14.3	17.1	11.9	16.9	17.5	12.4	16.3	18.2
Gain	27.8	34.5	39.6	39.0	48.3	50.3	48.2	58.4	61.6	38.2	46.3	51.5	52.5	63.2	65.4	68.0	81.6	84.0	45.4	53.0	61.1	62.7	77.0	79.6	82.8	96.0	101.0
% Distortion	4.7	4.2	4.6	4.5	4.7	4.5	4.3	4.7	4.3	4.7	4.8	4.9	4.9	4.7	4.9	4.6	4.9	4.7	4.7	4.7	4.8	4.7	4.8	4.7	4.9	4.8	5.0

Note (1) Grid return to pin No. 8.
Note (2) Maximum signal for 5.0% distortion.

FOR CIRCUIT SEE FIGURE 2

Sylvania Type **1LE3, 1E4G, 3C6**

RESISTANCE COUPLED AMPLIFIER DATA

Fixed Bias Operation

	Ebb = 45 VOLTS						Ebb = 67.5 VOLTS						Ebb = 90 VOLTS					
Rb	0.047		0.10		0.27		0.047		0.10		0.27		0.047		0.10		0.27	
Rcf	0.10	0.27	0.10	0.47	0.27	0.47	0.10	0.27	0.10	0.47	0.27	0.47	0.10	0.27	0.10	0.47	0.27	0.47
Ib	0.30	0.282	0.20	0.174	0.086	0.082	0.50	0.46	0.31	0.273	0.14	0.132	0.70	0.64	0.45	0.38	0.199	0.187
Ec	0.7	-0.8	-0.6	-0.8	-0.7	-0.8	-1.2	-1.4	-1.1	-1.4	-1.0	-1.2	-1.8	-2.1	-1.5	-2.0	-1.5	-1.7
Eb	30.9	32.3	25.0	27.6	21.8	22.9	44	45.9	36.5	40.2	34.7	31.9	57.1	60.0	45.0	52.0	36.2	39.5
Esig	0.10	0.10	0.10	0.10	0.10	0.10	0.5	0.5	0.5	0.5	0.5	0.5	0.5	0.5	0.5	0.5	0.5	0.5
Eout	0.68	0.74	0.74	0.86	0.83	0.92	3.7	3.95	4.05	4.6	4.7	5.05	3.94	4.2	4.32	4.76	5.0	5.2
Gain	6.8	7.4	7.4	8.6	8.3	9.2	7.45	7.9	8.1	9.2	9.4	10.1	7.9	8.4	8.65	9.5	10.0	10.4
% Distortion	0.7	0.7	0.5	0.9	0.8	0.9	2.5	2.1	2.9	2.3	3.3	3.1	1.7	1.4	1.7	1.3	2.4	2.2
Esig (1)	0.50	0.56	0.42	0.56	0.50	0.56	0.85	0.99	0.78	0.99	0.7	0.85	1.27	1.48	1.06	1.41	1.06	1.2
Eout	3.33	4.1	3.1	4.85	4.22	5.2	6.3	7.8	6.3	9.1	6.6	8.6	10.0	12.4	9.15	13.4	10.6	12.5
Gain	6.66	7.32	7.4	8.65	8.44	9.3	7.42	7.88	8.1	9.2	9.4	10.1	7.88	8.4	8.65	9.5	10.0	10.4
% Distortion	4.4	4.5	4.1	4.6	5.0	5.0	4.6	4.9	5.0	5.0	4.8	5.0	4.7	5.0	4.7	5.0	5.0	5.0

Note (1) Peak signal equal to bias. Optimum bias chosen for 5% maximum distortion. Grid return to pin No. 8.

FOR CIRCUIT SEE FIGURE 3

Sylvania Type 1LH4, 1H5G, 1B8GT, 3A8GT

RESISTANCE COUPLED AMPLIFIER DATA

Zero Bias Operation

	Ebb = 45 VOLTS (See Note 2)									Ebb = 67.5 VOLTS									Ebb = 90 VOLTS								
Rb	0.27			0.47			1.0			0.27			0.47			1.0			0.27			0.47			1.0		
Rcf	0.47	1.0	4.7	1.0	4.7	10.0	2.2	4.7	10.0	0.47	1.0	4.7	1.0	4.7	10.0	2.2	4.7	10.0	0.47	1.0	4.7	1.0	4.7	10.0	2.2	4.7	10.0
Ib	0.0075	0.0075	0.0075	0.0064	0.0064	0.0064	0.005	0.005	0.005	0.03	0.03	0.03	0.0242	0.0242	0.0242	0.0168	0.0168	0.0168	0.071	0.071	0.071	0.053	0.053	0.053	0.032	0.032	0.032
Eb	43	43	43	42	42	42	40	40	40	59.4	59.4	59.4	56.1	56.1	56.1	50.7	50.7	50.7	70.8	70.8	70.8	65.1	65.1	65.1	58.0	58.0	58.0
Esig	.03	.03	.03	.03	.03	.03	.03	.03	.03	0.05	0.05	0.05	0.05	0.05	0.05	0.05	0.05	0.05	0.1	0.1	0.1	0.1	0.1	0.1	0.1	0.1	0.1
Eout	.168	.200	.234	.270	.336	.350	.405	.465	.490	0.77	0.91	1.03	1.08	1.26	1.29	1.37	1.52	1.60	2.2	2.55	2.8	3.0	3.4	3.5	3.65	3.95	4.05
Gain	5.6	6.7	7.8	9.0	11.2	11.7	13.5	15.5	16.3	15.4	18.2	20.6	21.6	25.2	25.8	27.4	30.4	32.0	22.0	25.5	28.0	30.0	34.0	35.0	36.5	39.5	40.5
% Distortion	5.1	5.0	4.9	4.5	4.2	3.8	3.9	3.7	3.6	3.5	3.3	2.9	3.2	2.9	2.8	2.6	2.3	2.2	2.7	2.4	2.1	2.5	2.1	2.0	2.6	2.3	2.1
Esig (1)	.03	.03	.03	.03	.04	.04	.05	.05	.05	0.07	0.08	0.08	0.08	0.09	0.10	0.09	0.10	0.11	0.17	0.18	0.20	0.17	0.19	0.20	0.16	0.18	0.19
Eout	.168	.200	.234	.270	.445	.465	0.67	0.76	0.81	1.07	1.44	1.63	1.7	2.24	2.50	2.43	2.97	3.45	3.60	4.45	5.40	4.89	6.20	6.65	5.66	6.80	7.45
Gain	5.6	6.7	7.8	9.0	11.1	11.6	13.4	15.2	16.2	15.3	18.0	20.4	21.3	24.9	25.0	27.0	29.7	31.4	21.2	24.7	27.0	28.7	32.6	33.2	35.4	37.8	39.2
% Distortion	5.1	5.0	4.9	4.5	5.2	5.1	5.2	5.0	4.9	4.7	4.7	4.6	4.7	4.5	4.8	4.5	4.5	4.7	4.6	4.3	4.7	4.5	4.5	4.7	4.5	4.65	4.7

Note (1) Maximum signal for 5.0% Distortion. Note (2) Operation at Ebb = 45 volts is not recommended. Above 45 volt data is shown only to assist in determining end of life performance with 67.5 volt supply. For 45 volt supply type 1LD5 is recommended.

FOR CIRCUIT SEE FIGURE 5

Sylvania Type 1LN5, 1N5GT, 3A8GT

RESISTANCE COUPLED AMPLIFIER DATA

Zero Bias Operation

	Ebb = 45 VOLTS									Ebb = 67.5 VOLTS									Ebb = 90 VOLTS								
Rb	0.27			0.47			1.0			0.27			0.47			1.0			0.27			0.47			1.0		
Rcr	1.2			2.2			4.7			1.2			2.2			4.7			1.2			2.2			4.7		
Rcf	0.47	1.0	4.7	1.0	4.7	10	2.2	4.7	10	0.47	1.0	4.7	1.0	4.7	10	2.2	4.7	10	0.47	1.0	4.7	1.0	4.7	10	2.2	4.7	10
Ib	0.060	0.060	0.060	0.038	0.038	0.038	0.018	0.018	0.018	0.123	0.123	0.123	0.075	0.075	0.075	0.036	0.036	0.036	0.187	0.187	0.187	0.112	0.112	0.112	0.056	0.056	0.056
Eb	28.8	28.8	28.8	27.2	27.2	27.2	27.0	27.0	27.0	34.3	34.3	34.3	32.3	32.3	32.3	31.5	31.5	31.5	39.5	39.5	39.5	37.3	37.3	37.3	34.0	34.0	34.0
Ic2	0.0149	0.0149	0.0149	0.0095	0.0095	0.0095	0.005	0.005	0.005	0.029	0.029	0.029	0.0176	0.0176	0.0176	0.009	0.009	0.009	0.044	0.044	0.044	0.026	0.026	0.026	0.0134	0.0134	0.0134
Ec2	27.1	27.1	27.1	24.1	24.1	24.1	21.5	21.5	21.5	32.7	32.7	32.7	28.8	28.8	28.8	25.3	25.3	25.3	37.2	37.2	37.2	32.8	32.8	32.8	27.0	27.0	27.0
Esig	0.05	0.05	0.05	0.05	0.05	0.05	0.05	0.05	0.05	0.05	0.05	0.05	0.05	0.05	0.05	0.05	0.05	0.05	0.1	0.1	0.1	0.1	0.1	0.1	0.1	0.1	0.1
Eout	1.58	1.96	2.25	2.15	2.80	2.90	2.85	3.40	3.65	2.28	2.80	3.30	3.2	4.17	4.33	4.28	5.1	5.5	5.5	6.9	8.0	7.9	10.0	10.2	10.3	12.1	12.8
Gain	31.6	39.2	45.0	43.0	56.0	58.0	57.0	68.0	73.0	45.7	56.0	66.0	64.0	83.3	86.6	85.6	102.0	110.0	55.0	69.0	80.0	79.0	100	102	103	121	128
% Distortion	2.9	2.6	2.6	4.0	3.0	2.8	3.8	3.3	3.2	2.0	1.8	1.7	2.3	1.9	1.8	2.6	2.1	2.0	2.2	1.8	1.5	2.6	1.9	1.8	3.2	3.0	3.0
Esig (1)	0.09	0.09	0.09	0.07	0.08	0.08	0.06	0.07	0.07	0.13	0.15	0.17	0.11	0.13	0.14	0.09	0.1	0.11	0.21	0.23	0.25	0.17	0.19	0.19	0.13	0.14	0.14
Eout	2.75	3.45	4.0	3.0	4.45	4.60	3.40	4.68	4.90	5.65	8.00	10.2	6.7	10.0	10.9	7.4	9.6	10.9	10.8	14.4	17.8	12.5	17.2	17.9	12.9	16.1	17.0
Gain	30.6	38.3	44.4	42.8	55.6	57.5	56.6	66.9	70.0	43.5	53.3	60.0	61.0	77.0	77.8	82.3	96.0	99.0	51.5	62.5	71.2	73.5	90.5	94.2	99.0	115	121
% Distortion	5.0	4.7	4.5	4.4	4.8	4.7	4.6	5.0	4.8	4.6	4.7	4.8	4.8	4.5	4.9	4.6	4.5	5.0	5.0	4.9	4.8	4.9	4.7	4.6	4.9	4.9	4.9

Note (1) Maximum signal for 5.0% distortion.

FOR CIRCUIT SEE FIGURE 2

RESISTANCE COUPLED AMPLIFIER DATA

Zero Bias Operation

	Ebb = 45 VOLTS									Ebb = 67.5 VOLTS									Ebb = 90 VOLTS								
Rb	0.27			0.47			1.0			0.27			0.47			1.0			0.27			0.47			1.0		
Rc2	0.68			1.2			2.2			0.68			1.2			2.2			0.68			1.2			2.2		
Rcf	0.47	1.0	4.7	1.0	4.7	10	2.2	4.7	10	0.47	1.0	4.7	1.0	4.7	10	2.2	4.7	10	0.47	1.0	4.7	1.0	4.7	10	2.2	4.7	10
Ib	.072	.072	.072	.043	.043	.043	.023	.023	.023	.134	.134	.134	.078	.078	.078	.041	.041	.041	.20	.20	.20	.116	.116	.116	.06	.06	.06
Eb	25.6	25.6	25.6	24.8	24.8	24.8	22.0	22.0	22.0	31.3	31.3	31.3	30.8	30.8	30.8	26.5	26.5	26.5	35.9	35.9	35.9	35.5	35.5	35.5	30.0	30.0	30.0
Ic2	.042	.042	.042	.025	.025	.025	.0146	.0146	.0146	.07	.07	.07	.0421	.0421	.0421	.024	.024	.024	.101	.101	.101	.06	.06	.06	.034	.034	.034
Fc2	16.5	16.5	16.5	15.0	15.0	15.0	12.9	12.9	12.9	20.0	20.0	20.0	17.0	17.0	17.0	14.6	14.6	14.6	21.3	21.3	21.3	18.0	18.0	18.0	15.0	15.0	15.0
Esig	0.05	0.05	0.05	0.05	0.05	0.05	0.05	0.05	0.05	0.1	0.1	0.1	0.1	0.1	0.1	0.1	0.1	0.1	0.1	0.1	0.1	0.1	0.1	0.1	0.1	0.1	0.1
Eout	1.64	1.94	2.30	2.05	2.67	2.80	2.77	3.27	3.58	4.58	5.5	6.45	6.08	7.8	8.1	7.85	9.25	9.8	5.5	6.67	8.0	7.5	10.0	10.4	10.0	11.4	12.2
Gain	32.8	38.8	46.0	41.0	53.4	56.0	55.5	65.5	71.7	45.8	55.0	64.5	60.8	78.0	81.0	78.5	92.5	98.0	55.0	66.7	80.0	75.0	100	104	100	114	122
% Distortion	2.70	2.40	3.30	3.00	2.80	2.80	3.10	2.80	2.50	2.60	2.10	1.70	4.20	3.60	3.00	3.80	3.00	2.80	1.60	1.20	1.20	2.40	1.70	1.70	2.40	2.50	2.90
Esig (1)	0.09	0.10	0.11	0.08	0.09	0.09	0.07	0.09	0.09	0.16	0.18	0.20	0.12	0.15	0.15	0.12	0.13	0.14	0.24	0.26	0.27	0.17	0.19	0.20	0.16	0.16	0.16
Eout	2.85	3.75	4.97	0.13	4.76	4.90	3.83	5.65	6.05	7.0	9.6	11.9	7.2	11.1	11.5	9.3	11.3	12.8	12.5	1.59	19.4	12.3	17.7	19.0	14.9	17.2	18.4
Gain	31.7	37.5	45.2	39.1	52.8	54.5	54.8	62.7	67.2	43.7	53.2	59.5	60.0	74.0	76.6	77.5	87.0	91.5	52.0	61.2	71.9	72.3	93.1	95.0	93.1	107	115
% Distortion	4.60	4.70	4.50	5.00	4.70	4.50	4.20	4.90	4.60	4.70	4.70	4.80	5.00	4.90	4.80	4.80	4.50	4.70	4.90	4.90	4.90	5.0	4.30	4.70	4.50	4.70	4.90

Note (1) Maximum signal for 5.0% Distortion.

FOR CIRCUIT SEE FIGURE 2

Sylvania Type **1S5, 1U5**

RESISTANCE COUPLED AMPLIFIER DATA

Zero Bias Operation

	Ebb = 45 VOLTS									Ebb = 67.5 VOLTS									Ebb = 90 VOLTS								
Rb	0.27			0.47			1.0			0.27			0.47			1.0			0.27			0.47			1.0		
Rc_2	1.0			1.8			3.9			1.0			1.8			3.9			1.0			1.8			3.9		
Rcf	0.47	1.0	4.7	1.0	4.7	10	2.2	4.7	10	0.47	1.0	4.7	1.0	4.7	10	2.2	4.7	10	0.47	1.0	4.7	1.0	4.7	10	2.2	4.7	10
Ib	.080	.080	.080	.050	.050	.050	.025	.025	.025	.145	.145	.145	.087	.087	.087	.045	.045	.045	.22	.22	.22	.13	.13	.13	.065	.065	.065
Eb	23.4	23.4	23.4	21.5	21.5	21.5	20.0	20.0	20.0	28.3	28.3	28.3	26.6	26.6	26.6	22.5	22.5	22.5	30.5	30.5	30.5	29.0	29.0	29.0	25.0	25.0	25.0
Ic_2	.0232	.0232	.0232	.0146	.0146	.0146	.0077	.0077	.0077	.041	.041	.041	.025	.025	.025	.013	.013	.013	.061	.061	.061	.036	.036	.036	.0187	.0187	.0187
Ec_2	21.8	21.8	21.8	18.7	18.7	18.7	15.0	15.0	15.0	26.5	26.5	26.5	22.5	22.5	22.5	16.8	16.8	16.8	29.0	29.0	29.0	25.0	25.0	25.0	17.0	17.0	17.0
Esig	0.05	0.05	0.05	0.05	0.05	0.05	0.05	0.05	0.05	0.1	0.1	0.1	0.1	0.1	0.1	0.1	0.1	0.1	0.1	0.1	0.1	0.1	0.1	0.1	0.1	0.1	0.1
Eout	1.55	1.94	2.25	2.15	2.75	2.85	2.80	3.25	3.50	4.10	5.0	5.7	5.5	6.8	7.0	7.1	8.2	8.65	4.9	6.0	6.9	6.65	8.35	8.7	9.0	10.4	11.0
Gain	31.0	38.8	45.0	43.0	55.0	57.0	56.0	65.0	70.0	41.0	50.0	57.0	55.0	68.0	70.0	71.0	82.0	86.5	49.0	60.0	69.0	66.5	83.5	87.0	90.0	104	110
% Distortion	2.10	1.90	1.20	2.00	1.70	1.60	2.90	2.40	2.0	1.80	1.30	1.60	1.70	2.0	2.1	2.30	2.50	2.70	80	1.40	2.0	1.70	3.10	3.50	3.0	3.30	3.60
Esig (1)	0.13	0.17	0.19	0.12	0.15	0.15	0.1	0.11	0.11	0.26	0.28	0.30	0.21	0.23	0.24	0.15	0.17	0.17	0.34	0.34	0.34	0.28	0.28	0.28	0.18	0.18	0.17
Eout	3.95	6.0	7.55	5.0	7.40	7.6	5.60	6.50	6.90	9.85	12.6	15.2	10.4	13.9	14.8	10.0	12.8	13.4	14.4	17.5	20.0	16.5	20.3	21.0	15.1	17.4	17.6
Gain	30.4	35.3	39.7	41.6	49.3	50.6	56.0	59.0	62.7	37.9	45.0	50.6	49.6	60.3	61.8	66.8	75.3	78.8	42.4	51.5	58.9	59.0	72.5	75.0	84.0	96.8	103.5
% Distortion	4.90	4.60	4.70	4.60	4.90	4.60	4.70	4.80	4.70	4.80	4.60	4.80	4.50	4.50	4.90	4.40	4.90	4.60	4.40	4.50	5.0	4.60	4.50	4.80	4.70	4.90	4.80

Note (1) Maximum signal for 5.0% distortion.

FOR CIRCUIT SEE FIGURE 2

Sylvania Type 1U4, 1SA6GT

RESISTANCE COUPLED AMPLIFIER DATA

Zero Bias Operation

	Ebb = 45 VOLTS (See Note 2)									Ebb = 67.5 VOLTS									Ebb = 90 VOLTS								
Rb	0.27			0.47			1.0			0.27			0.47			1.0			0.27			0.47			1.0		
Rc2	1.0			1.5			3.3			1.0			1.5			3.3			1.0			1.5			3.3		
Rcf	0.47	1.0	4.7	1.0	4.7	10.0	2.2	4.7	10.0	0.47	1.0	4.7	1.0	4.7	10.0	2.2	4.7	10.0	0.47	1.0	4.7	1.0	4.7	10.0	2.2	4.7	10.0
Ib	.048	.048	.048	.034	.034	.034	.0175	.0175	.0175	.101	.101	.101	.070	.070	.070	.035	.035	.035	.156	.156	.156	.11	.11	.11	.054	.054	.054
Eb	32.14	32.14	32.14	29.12	29.12	29.12	28.5	28.5	28.5	40.2	40.2	40.2	34.6	34.6	34.6	32.5	32.5	32.5	47.9	47.9	47.9	38.3	38.3	38.3	36.0	36.0	36.0
Ic2	.0165	.0165	.0165	.012	.012	.012	.006	.006	.006	.033	.033	.033	.0235	.0235	.0235	.0115	.0115	.0115	.049	.049	.049	.036	.036	.036	.017	.017	.017
Ec2	28.5	28.5	28.5	27.0	27.0	27.0	25.2	25.2	25.2	34.5	34.5	34.5	32.25	32.25	32.25	29.6	29.6	29.6	41.0	41.0	41.0	36.0	36.0	36.0	33.5	33.5	33.5
Esig	.05	.05	.05	.05	.05	.05	.04	.04	.05	.05	.05	.05	.05	.05	.05	.05	.05	.05	.05	.05	.05	.05	.05	.05	.05	.05	.05
Eout	1.46	1.75	2.10	2.00	2.55	2.68	2.25	2.52	3.45	2.3	2.75	3.3	3.3	4.25	4.45	4.35	5.2	5.55	2.92	3.60	4.25	4.20	5.40	5.60	5.70	6.80	7.40
Gain	28.3	35	42	40	51	53.6	56.3	63.1	69.0	46	55	66	66	85.0	89	87	104	111	58.4	72.0	85.0	84.0	108	112	113	136	148
% Distortion	3.4	3.4	3.9	4.2	4.3	4.0	4.1	4.4	4.9	2.0	2.0	2.0	2.3	2.3	1.9	3.8	3.6	3.3	1.4	1.2	1.3	1.3	1.1	0.9	2.5	2.2	1.8
Esig (1)	.06	.06	.06	.05	.05	.06	.04	.04	.05	.10	.11	.11	.09	.10	.10	.06	.07	.07	0.13	0.15	0.15	0.13	0.15	0.16	0.09	0.09	0.11
Eout	1.70	2.08	2.50	2.00	2.55	3.20	2.25	2.52	3.45	4.45	5.9	7.0	5.8	8.35	8.60	5.20	7.15	7.6	7.35	10.3	12.0	10.4	15	16.5	10	11.8	15.1
Gain	28.3	34.8	41.7	40	51	53.4	56.3	63.1	69.0	44.5	53.5	63.5	64.5	83.5	86.0	86.8	102	108	56.5	68.8	80	80	100	103	111	131	138
% Distortion	4.4	4.3	4.5	4.2	4.3	4.9	4.1	4.4	4.9	4.6	5.0	4.8	4.8	4.9	4.1	4.6	5.0	4.6	4.4	5.0	4.8	4.8	4.9	5.0	4.9	4.4	4.6

Note (1) Maximum signal for 5.0% distortion. Note (2) Operation at Ebb = 45 volts is not recommended. Above 45 volts data is shown only to assist in determining end of life performance with 67.5 volt supply.

FOR CIRCUIT SEE FIGURE 2

RESITANCE COUPLED AMPLIFIER DATA

Sylvania Type **6AD4**

Zero Bias Operation

	Ebb = 100 Volts							Ebb = 250 Volts						
Rb	0.10		0.27			0.47		0.1		0.27			0.47	
Rcf	0.27	0.47	0.27	0.47	1.0	0.47	1.0	0.27	0.47	0.27	0.47	1.0	0.47	1.0
Rk	...	...	.	.	.	..	...	...	...	...	...	...	...	...
Ib	0.39	0.39	0.192	0.192	0.192	0.124	0.124	1.48	1.48	0.65	0.65	0.65	0.40	0.40
Ec	...	..	.	..	.	..	...	..	...	...	...	...	...	...
Eb	61.0	61.0	48.2	48.2	48.2	41.7	41.7	102.0	102.0	74.5	74.5	74.5	62.0	62.0
Esig	0.1	0.1	0.1	0.1	0.1	0.1	0.1	0.1	0.1	0.1	0.1	0.1	0.1	0.1
Eout	3.60	3.80	3.70	4.00	4.30	3.90	4.35	4.85	5.20	5.05	5.40	5.60	5.20	5.60
Gain	36.0	38.0	37.0	40.0	43.0	39.0	43.5	48.5	52.0	50.5	54.0	56.0	52.0	56.0
% Dist.	2.0	1.9	2.3	1.7	1.3	1.9	1.4	0.4	0.4	0.8	0.7	0.6	0.8	0.6
Esig (1)	0.21	0.23	0.19	0.24	0.28	0.22	0.29	0.72	0.75	0.56	0.67	0.78	0.60	0.78
Eout	7.4	8.4	6.7	9.3	11.0	8.2	11.5	30.5	33.0	25.0	31.5	38.0	27.5	37.5
Gain	35.2	36.5	35.2	38.8	39.3	37.2	39.7	42.4	44.0	44.6	47.0	48.7	45.8	48.1
% Dist.	4.9	5.0	4.8	4.9	5.0	4.8	5.0	4.8	4.9	5.0	5.0	4.9	5.0	5.0

(1) Maximum Signal For 5.0% Distortion

FOR CIRCUIT SEE FIGURE 5

Self Bias Operation

	Ebb = 100 Volts							Ebb = 250 Volts						
Rb	0.10		0.27			0.47		0.10		0.27			0.47	
Rcf	0.27	0.47	0.27	0.47	1.0	0.47	1.0	0.27	0.47	0.27	0.47	1.0	0.47	1.0
Rk	3300	3300	5600	6800	6800	10,000	10,000	1200	1200	2700	2700	3300	3900	4700
Ib	0.340	0.340	0.175	0.168	0.168	0.112	0.107	1.20	1.20	0.550	0.550	0.510	0.345	0.324
Ec	-1.122	-1.122	-0.980	-1.142	-1.142	-1.120	-1.070	-1.440	-1.440	-1.485	-1.485	-1.682	-1.345	-1.522
Eb	66.0	66.0	52.7	54.7	54.7	47.4	49.7	130.0	130.0	101.5	101.5	112.3	88.0	97.7
Esig	0.1	0.1	0.1	0.1	0.1	0.1	0.1	0.1	0.1	0.1	0.1	0.1	0.1	0.1
Eout	3.40	3.60	3.45	3.80	4.10	3.70	4.05	4.60	4.70	4.6	4.9	4.95	4.90	5.05
Gain	34.0	36.0	34.5	38.0	41.0	37.0	40.5	46.0	47.0	46.0	49.0	49.5	49.0	50.5
% Dist.	2.2	2.0	2.4	1.9	1.6	2.0	1.4	0.6	0.6	0.9	0.7	0.6	0.8	0.6
Esig (1)	0.21	0.22	0.20	0.23	0.24	0.22	0.27	0.53	0.53	0.53	0.53	0.68	0.46	0.59
Eout	6.90	7.80	7.05	8.60	9.70	8.15	10.7	23.5	24.0	24.0	25.2	33.0	22.3	29.5
Gain	32.8	34.4	35.2	37.4	40.4	37.0	39.6	44.3	45.3	45.3	47.6	48.5	48.4	50.0
% Dist.	5.0	4.9	4.9	4.8	4.2	4.9	4.3	3.1	2.9	4.9	4.0	4.2	3.8	3.7

(1) At Grid Currrent Point, Less Than ⅓ Microampere Grid Current Through 0.27 Megohm Grid Resistor.

FOR CIRCUIT SEE FIGURE 4

RESISTANCE COUPLED AMPLIFIER DATA

	Ebb = 100 VOLTS										
Rb	.047			.1			.27			.47	
Rc2	.22			.39			1.0			1.8	
Rcf	.047	.10	.27	.10	.27	.47	.27	.47	1.0	.47	1.0
Rk	680	680	680	1500	1500	1500	3300	3300	3300	5600	5600
Ib	1.13	1.13	1.13	.61	.61	.61	.265	.265	.265	.158	.158
Ic2	.280	.280	.280	.167	.167	.167	.074	.074	.074	.043	.043
Ec1	-0.96	-0.96	-0.96	-1.17	-1.17	-1.17	-1.12	-1.12	-1.12	-1.12	-1.12
Ec2	38.4	38.4	38.4	35.0	35.0	35.0	26.0	26.0	26.0	22.6	22.6
Eb	46.9	46.9	46.9	39.0	39.0	39.0	28.5	28.5	28.5	25.7	25.7
E sig.	0.1	0.1	0.1	0.1	0.1	0.1	0.1	0.1	0.1	0.1	0.1
E out	4.2	5.7	6.7	5.4	7.7	8.3	7.6	9.0	10.5	8.5	10.5
Gain	42	57	67	54	77	83	76	90	105	85	105
% Dist.	3.3	2.7	2.1	2.9	2.0	1.6	2.0	2.1	3.0	2.0	2.3
E sig. (1)	0.15	0.17	0.20	0.14	0.20	0.22	0.16	0.8	0.20	0.15	0.17
E out	6.2	9.2	12.8	7.5	14.4	17.0	11.5	15.7	20.7	12.6	17.7
Gain	41.3	54.1	64.0	53.5	72.0	77.5	72.0	87.2	103	84.0	104
% Dist.	4.8	5.0	5.0	4.7	4.9	5.0	4.6	4.6	4.5	4.7	4.6

	Ebb = 150 VOLTS										
Rb	.047			.1			.27			.47	
Rc2	.22			.47			1.2			2.2	
Rcf	.047	.10	.27	.10	.27	.47	.27	.47	1.0	.47	1.0
Rk	470	470	470	1000	1000	1000	2200	2200	2200	3900	3900
Ib	1.86	1.86	1.86	.97	.97	.97	.41	.41	.41	.24	.24
Ic2	.460	.460	.460	.234	.234	.234	.101	.101	.101	.057	.057
Ec1	-1.09	-1.09	-1.09	-1.20	-1.20	-1.20	-1.13	-1.13	-1.13	-1.16	-1.16
Ec2	48.9	48.9	48.9	40.0	40.0	40.0	28.9	28.9	28.9	24.5	24.5
Eb	62.6	62.6	62.6	53.0	53.0	53.0	39.1	39.1	39.1	37.0	37.0
E sig.	0.1	0.1	0.1	0.1	0.1	0.1	0.1	0.1	0.1	0.1	0.1
E out	5.2	6.9	8.4	7.2	9.8	10.7	10.4	12.1	14.2	11.7	14.8
Gain	52	69	84	72	98	107	104	121	142	117	148
% Dist.	2.2	1.7	1.0	2.3	1.6	1.2	2.4	1.4	1.0	2.4	1.4
E sig. (1)	0.22	0.26	0.31	0.17	0.23	0.25	0.17	0.20	0.22	0.16	0.19
E out	11.2	17.0	24.0	11.9	21.6	25.0	17.2	23.2	29.5	18.5	26.8
Gain	50.8	65.4	77.5	70.0	93.9	100	101	116	134	115	141
% Dist.	4.9	4.9	5.0	4.8	4.9	4.8	4.9	4.8	4.8	4.9	5.0

Note (1) For self bias operation this is taken at the grid current point with less than ⅙ Microampere grid current.

FOR CIRCUIT SEE FIGURE 1

RESISTANCE COUPLED AMPLIFIER DATA

Sylvania Type 6BF7, 6BG7

Self Bias Operation

Single Section of Types 6BF7 or 6BG7

	Ebb = 100 VOLTS						Ebb = 250 VOLTS					
Rb	0.047		0.1		0.27		0.047		0.1		0.27	
Rcf	0.1	0.27	0.1	0.47	0.27	0.47	0.1	0.27	0.1	0.47	0.27	0.47
Rk	1200	1500	2200	2700	6800	8200	680	820	1200	1800	3900	4700
Ib	1.12	1.04	0.61	0.58	0.24	0.226	3.23	3.07	1.75	1.57	0.67	0.63
Ec	-1.34	-1.56	-1.34	-1.57	-1.64	-1.85	-2.20	-2.52	-2.10	-2.83	-2.61	-2.96
Eb	47.4	51.1	39.0	42.0	35.1	39.0	98.0	106.7	75.0	93.0	69.0	80.0
Esig	0.1	0.1	0 1	0.1	0.1	0.1	0.5	0.5	0.5	0.5	0.5	0.5
Eout	1.95	1.90	1.85	2.0	1.91	1.88	11.0	11.2	10.8	11.2	9.9	10.0
Gain	19.5	19.0	18.5	20.0	19.1	18.8	22.0	22.4	21.6	22.4	19.8	20.0
% Distortion	56	.42	.54	.35	.31	.37	1.4	1.2	1.8	.89	1.1	.71
Esig (1)	0.43	0 60	0.44	0.58	0.63	0.79	1.07	1.31	0.97	1.52	1.34	1.62
Eout	8.2	11.4	8.0	11.6	11.8	14.5	23.4	28.8	20.8	33.2	26.5	32.3
Gain	19.0	19.0	18.2	20.0	18.7	18.4	21.8	21.9	21.4	21.9	19.8	20.0
% Distortion	4.1	4.9	4.5	4.0	4.8	4.9	5.0	4.7	4.5	4.7	4.9	4.6

Note (1) For self bias operation this is taken at the grid current point with less than ⅛ microampere grid current.

FOR CIRCUIT SEE FIGURE 4

Sylvania Type 6BU6, 12BU6

Self Bias Operation

	Ebb = 100 VOLTS						Ebb = 250 VOLTS					
Rb	0.047		0.1		0.27		0.047		0.1		0.27	
Rcf	0.1	0.27	0.1	0.47	0.27	0.47	0.1	0.27	0.1	0.47	0.27	0.47
Rk	1800	2200	2700	3900	6800	8200	1500	1800	2200	3300	5600	8200
Ib	1.07	1.0	0.62	0.56	0.256	0.240	2.85	2.69	1.63	1.46	0.661	0.60
Ec	-1.93	-2.2	-1.67	-2.18	-1.74	-1.97	-4.27	-4.84	-3.59	-4.82	-3.70	-4.92
Eb	49.6	53.0	38	44	31	35.2	116	123.8	87	104	71.8	88
Esig	0.5	0.5	0.5	0.5	0.5	0.5	1.0	1.0	1.0	1.0	1.0	1.0
Eout	5.3	5.4	5.6	5.8	5.7	5.8	11.2	11.8	11.8	12.4	12.1	12.2
Gain	10.6	10.8	11.2	11.6	11.4	11.6	11.2	11.8	11.8	12.4	12.1	12.2
% Distortion	1.2	1.9	2.0	1.8	2.2	1.8	1.3	1.2	1.8	1.3	1.8	1.3
Esig (1)	1.02	1.24	0.87	1.23	0.97	1.10	2.80	3.25	2.23	3.27	2.40	3.32
Eout	10.6	13.2	9.5	14.2	11.0	12.8	31.2	38.0	26.0	40.4	28.5	40.6
Gain	10.4	10.6	10.9	11.5	11.3	11.6	11.1	11.7	11.7	12.3	12.1	12.2
% Distortion	4.5	4.9	4.7	4.8	4.9	4.3	4.5	4.6	4.4	4.5	4.5	4.9

Note (1) For self bias operation this is taken at the grid current point with less than ⅛ microampere grid current.

FOR CIRCUIT SEE FIGURE 4

RESISTANCE COUPLED AMPLIFIER DATA

Sylvania Type 6BK6, 12AX7, 12BK6, 26BK6

Self Bias Operation

	Ebb = 100 VOLTS							Ebb = 250 VOLTS						
Rb	0.1		0.27			0.47		0.1		0.27			0.47	
Rcf	0.27	0.47	0.27	0.47	1.0	0.47	1.0	0.27	0.47	0.27	0.47	1.0	0.47	1.0
Rk	4700	5600	8200	10,000	10,000	12,000	15,000	1800	1800	3300	3300	3900	4700	5600
Ib	.23	.204	.132	.117	.117	.092	.08	.84	.84	.45	.45	.41	.30	.28
Ec	-1.08	-1.143	-1.03	-1.17	-1.17	-1.10	-1.2	-1.51	-1.51	-1.49	-1.49	-1.59	-1.41	-1.57
Eb	77.0	79.6	64.4	68.4	68.4	56.8	62.4	166.	166.	128.	128.	139.	109.	118.5
Esig.	0.1	0.1	0.1	0.1	0.1	0.1	0.1	0.1	0.1	0.1	0.1	0.1	0.1	0.1
Eout	3.6	3.8	4.2	4.35	5.0	4.7	5.2	5.4	5.7	6.1	6.6	6.9	6.6	7.1
Gain	36.0	38.0	42.0	43.5	50.0	47.0	52.0	54.0	57.0	61.0	66.0	69.0	66.0	71.0
% Dist.	3.4	3.4	3.6	3.2	2.6	3.2	2.6	0.3	....	0.5	0.2	0.2	0.4	0.2
Esig. (1)	.14	.14	.11	.14	.17	.13	.17	.5	.5	.41	.45	.54	.38	.48
Eout	5.0	5.2	4.6	6.0	8.3	6.1	8.5	26.5	28.5	24.5	29.0	37.0	25.0	33.5
Gain	35.7	37.2	41.8	42.9	48.8	46.9	50.0	53.0	52.0	59.8	64.4	68.5	65.8	69.8
% Dist.	5.0	5.1	4.1	4.9	5.1	4.4	5.0	5.0	4.4	4.95	4.4	4.8	4.1	4.2

(1) At grid current point, less than ½ Microampere grid current through 0.27 megohm grid resistor.

FOR CIRCUIT SEE FIGURE 4

Zero Bias Operation

	Ebb = 100 VOLTS							Ebb = 250 VOLTS						
Rb	0.1		0.27			0.47		0.1		0.27			0.47	
Rcf	0.27	0.47	0.27	0.47	1.0	0.47	1.0	0.27	0.47	0.27	0.47	1.0	0.47	1.0
Rk	....	...	. ..	....	....	....	....	....	....	....	....	....	....	....
Ib	.255	.255	.146	.146	.146	.100	.100	1.16	1.16	.57	.57	.57	.355	.355
Ec	....	....	....	....	....	....	....	....	....	....	....	....	....	....
Eb	74.5	74.5	60.6	60.6	60.6	53	53	134.	134.	123.	123.	123.	83.	83.
Esig.	0.1	0.1	0.1	0.1	0.1	0.1	0.1	0.1	0.1	0.1	0.1	0.1	0.1	0.1
Eout	3.9	4.2	4.35	5.0	5.5	4.85	5.7	6.0	6.3	6.6	7.2	7.7	7.3	8.0
Gain	39	42	43.5	50	55	48.5	57	60	63	66	72	77	73	80
% Dist.	3.0	2.7	3.4	2.6	2.0	2.9	2.0	....	....	....	....	....	0.3	....
Esig. (1)	.14	.15	.13	.15	.18	.14	.18	.52	.58	.43	.5	.57	.42	.53
Eout	5.3	6.1	5.6	7.2	9.3	6.7	8.5	28.5	32.0	26.5	33.0	40.5	29.0	39.0
Gain	37.9	40.7	43	48	51.7	47.8	47.2	54.8	57.1	61.6	66	71.1	69.	73.6
% Dist.	4.8	4.8	4.8	4.7	4.9	4.7	4.8	4.8	5.0	4.9	5.0	4.9	4.8	4.8

(1) Maximum signal for 5.0% distortion.

FOR CIRCUIT SEE FIGURE 5

RESISTANCE COUPLED AMPLIFIER DATA

Sylvania Type 6C4, 12AU7

Self Bias Operation

	Ebb = 100 VOLTS						Ebb = 250 VOLTS					
Rb	0.047		0.1		0.27		0.047		0.1		0.27	
Rcf	0.1	0.27	0.1	0.47	0.27	0.47	0.1	0.27	0.1	0.47	0.27	0.47
Rk	1200	1200	2200	2700	6800	8200	1000	1000	1500	1800	4700	6800
Ib	1.22	1.22	.66	.628	.259	.246	3.2	3.2	1.78	1.72	.684	.63
Ec	1.465	1.465	1.45	1.695	1.76	2.02	3.2	3.2	2.67	3.10	3.21	4.28
Eb	42.7	42.7	34	37.2	30	33.6	150.5	150.5	72	78	65	80
Esig	0.5	0.5	0.5	0.5	0.5	0.5	1.0	1.0	1.0	1.0	1.0	1.0
Eout	6.25	6.6	6.35	6.75	6.3	6.3	13.5	14.1	13.8	14.3	13.4	13.2
Gain	12.5	13.2	12.7	13.5	12.6	12.6	13.5	14.1	13.8	14.3	13.4	13.2
% Distortion	4.0	3.6	4.3	2.9	3.0	2.5	3.3	3.1	3.8	2.8	2.5	2.0
Esig (1)	0.65	0.65	0.57	0.77	0.71	0.98	1.70	1.70	1.34	1.70	1.80	2.52
Eout	8.1	8.6	7.2	10.4	8.9	12.4	23.0	24.0	18.5	24.5	24.1	33.1
Gain	12.5	13.2	12.6	13.5	12.5	12.6	13.5	14.1	13.8	14.3	13.4	13.1
% Distortion	4.8	4.4	4.8	4.6	4.6	5.0	4.9	4.6	5.0	5.0	4.9	5.0

(1) At grid current point, less than ⅙ microampere grid current.

FOR CIRCUIT SEE FIGURE 4

Sylvania Type 6C5GT

Self Bias Operation

	Ebb = 100 VOLTS						Ebb = 250 VOLTS					
Rb	0.047		0.1		0.27		0.047		0.1		0.27	
Rcf	0.1	0.27	0.1	0.47	0.27	0.47	0.1	0.27	0.1	0.47	0.27	0.47
Rk	1800	2200	2700	3900	6800	8200	1800	1800	2700	3900	6800	8200
Ib	0.98	0.90	0.58	0.51	0.24	0.227	2.50	2.50	1.45	1.28	0.60	0.57
Ecf	-1.765	-1.98	-1.565	-1.99	-1.63	-1.86	-4.50	-4.50	-3.92	-4.99	-4.08	-4.67
Eb	54	57.7	42	49	35.2	38.7	132.5	132.5	105	122	88	96
Esig	0.5	0.5	0.5	0.5	0.5	0.5	1.0	1.0	1.0	1.0	1.0	1.0
Eout	5.75	6.0	6.15	6.65	6.5	6.7	12.6	13.45	13.2	14.25	13.6	14.1
Gain	11.5	12.0	12.3	13.3	13.0	13.4	12.6	13.45	13.2	14.25	13.6	14.1
% Distortion	2.0	1.7	2.4	1.7	2.3	1.9	1.5	1.2	1.9	1.3	1.9	1.6
Esig (1)	0.92	1.1	0.8	1.1	0.86	1.0	3.07	3.07	2.5	3.3	2.58	3.0
Eout	10.55	13.2	9.8	14.6	11.1	13.3	38.4	41.2	32.6	46.8	35.0	42.0
Gain	11.5	12.0	12.25	13.3	12.9	13.3	12.5	13.4	13.05	14.2	13.55	14.0
% Distortion	4.0	4.0	4.1	4.1	4.5	4.1	5.0	4.0	5.0	4.8	5.0	5.0

Note (1) At grid current point, less than ⅙ microampere grid current.

FOR CIRCUIT SEE FIGURE 4

RESISTANCE COUPLED AMPLIFIER DATA

Self Bias Operation

	Ebb = 100 VOLTS						Ebb = 200 VOLTS					
Rb	0.047		0.10		0.27		0.047		0.10		0.27	
Rcf	0.10	0.27	0.10	0.47	0.27	0.47	0.10	0.27	0.10	0.47	0.27	0.47
Rk	1200	1500	2200	3300	8200	10,000	680	820	1500	2200	5600	6800
Ib	1.35	1.28	0.715	0.64	0.26	0.244	3.10	2.96	1.53	1.41	0.56	0.535
Ec	−1.62	−1.92	−1.57	−2.11	−2.13	−2.44	−2.11	−2.43	−2.29	−3.10	−3.14	−3.64
Eb	36.5	39.8	28.5	36.0	29.8	34.1	54.2	61.0	47.0	59.5	49.0	55.8
Esig	0.5	0.5	0.5	0.5	0.5	0.5	1.0	1.0	1.0	1.0	1.0	1.0
Eout	6.3	6.35	6.1	6.2	5.8	5.85	14.0	14.2	13.2	13.2	12.1	12.1
Gain	12.6	12.7	12.2	12.4	11.6	11.7	14.0	14.2	13.2	13.2	12.1	12.1
% Distortion	3.1	2.6	3.4	2.1	2.3	1.8	4.3	3.5	4.0	2.3	2.4	2.0
Esig (1)	0.66	0.89	0.62	1.00	1.00	1.21	1.01	1.25	1.14	1.69	1.71	2.05
Eout	8.3	11.3	7.6	12.4	11.6	14.2	14.1	17.7	15.0	22.3	20.6	24.7
Gain	12.6	12.7	12.2	12.4	11.6	11.7	14.0	14.2	13.2	13.2	12.1	12.1
% Distortion	4.8	4.7	4.3	4.5	5.0	5.0	4.5	4.8	4.8	4.7	4.8	4.7

Note (1) Maximum signal at grid current point less than ½ microampere.

FOR CIRCUIT SEE FIGURE 4

RESISTANCE COUPLED AMPLIFIER DATA

Sylvania Type 6L5G

Self Bias Operation

	Ebb = 100 VOLTS						Ebb = 250 VOLTS					
Rb	.047		0.10		0.27		.047		0.10		0.27	
Rcf	0.10	0.27	0.1	0.47	.27	.47	.10	.27	.10	.47	.27	.47
Rk	2200	2700	3300	5600	10,000	12,000	1800	2200	2700	4700	8200	10,000
If	1.0	.92	.59	.48	.227	.213	2.70	2.49	1.54	1.27	.60	.56
Ec	2.20	2.48	1.95	2.68	2.27	2.56	4.86	5.48	4.16	5.96	4.92	5.6
Eb	53	56.7	41	52	38.6	42.5	123	133	96	123	88	99
Esig	0.50	.50	.50	.50	.50	.50	1.0	1.0	1.0	1.0	1.0	1.0
Eout	5.7.	6.10	6.0	6.3	6.25	6.65	12.4	12.8	12.9	13.4	13.4	13.9
Gain	11.40	12.20	12.0	12.6	12.5	13.30	12.40	12.80	12.90	13.40	13.40	13.90
% Distortion	1.8	1.6	1.8	1.6	2.0	1.4	1.3	1.2	1.7	1.2	1.6	1.2
Esig (1)	1.2	1.4	1.00	1.55	1.10	1.45	3.20	3.64	2.60	4.0	3.10	3.50
Eout	13.7	17.0	12.0	19.5	13.7	19.1	39.2	46.5	33.4	53.5	41.6	48.5
Gain	11.40	12.15	12.0	12.6	12.5	13.15	12.3	12.75	12.75	13.35	13.40	13.85
% Distortion	4.60	5.0	4.5	5.1	5.0	4.90	4.5	4.5	4.4	5.0	5.1	4.6

Note (1) At grid current point, less than ½ microampere grid current.

FOR CIRCUIT SEE FIGURE 4

Sylvania Type 6N7GT

Self Bias Operation

	Ebb = 100 VOLTS						Ebb = 250 VOLTS					
Rb	0.047		0.1		0.27		0.047		0.1		0.27	
Rcf	0.10	.27	.10	.47	.27	.47	.10	.27	.10	.47	.27	.47
Rk	1800	1800	2700	3300	6800	6800	1000	1200	1500	1800	3300	3900
Ib	.81	.81	.51	.469	.225	.225	2.36	2.21	1.45	1.36	.64	.61
Ec	1.46	1.46	1.38	1.55	1.53	1.53	2.36	2.65	2.18	2.45	2.11	2.38
Eb	61.9	61.9	49	53.1	39.2	39.2	139	146	105	114	77	85.5
Esig	.10	.10	.10	.10	.10	.10	.50	.50	.50	.50	.50	.50
Eout	1.74	1.93	1.93	2.2	2.23	2.38	10.0	10.9	10.9	12.5	12.8	13.0
Gain	17.4	19.3	19.3	22.0	22.3	23.8	20.0	21.8	21.8	25.0	25.6	26.0
% Distortion	1.2	1.0	1.3	1.0	1.3	1.1	1.8	1.8	2.6	2.2	2.7	2.4
Esig (1)	.40	.40	.30	.50	.42	.42	1.20	1.40	1.00	1.22	.90	1.1
Eout	6.85	7.65	5.76	10.9	9.34	10.0	23.8	30.4	21.8	30.5	23.0	28.8
Gain	17.1	19.1	19.2	21.8	22.0	23.8	19.8	21.7	21.8	25.0	25.6	26.2
% Distortion	4.7	3.7	3.7	4.8	5.0	4.2	4.5	4.9	4.8	4.7	4.7	5.0

Note (1) At grid current point, less than ½ microampere grid current.

FOR CIRCUIT SEE FIGURE 4

RESISTANCE COUPLED AMPLIFIER DATA

Sylvania Type 6Q7GT, 6T8, 19T8, 6AQ6, 6AT6, 6K5G, 6SZ7, 12AT6

Self Bias Operation

	Ebb = 100 VOLTS							Ebb = 250 VOLTS						
Rb	0.1		0.27			0.47		0.1		0.27			0.47	
Rcf	0.27	0.47	0.27	0.47	1.0	0.47	1.0	0.27	0.47	0.27	0.47	1.0	0.47	1.0
Rk	3300	3300	5600	5600	6800	8200	10,000	1800	2200	3300	3900	4700	5600	6800
Ib	.288	288	.161	.161	.146	.108	099	.95	.88	.476	.46	.425	.31	.29
Ec	.95	.95	.9	.9	.99	.89	.99	1.71	1.94	1.57	1.79	2.0	1.73	1.97
Eb	71.2	71.2	56.5	56.5	60.6	49.2	53.5	155.	162.	121.5	125.8	135.2	104.4	113.7
Esig.	0.1	0.1	0.1	0.1	0.1	0.1	0.1	0.1	0.1	0.1	0.1	0.1	0.1	0.1
Eout	3.53	3.82	4.1	4.53	4.73	4.63	4.9	4.23	4.4	4.9	5.2	5.4	5.3	5.7
Gain	35.3	38.2	41.	45.3	47.3	46.3	49.	42.3	44.	49.	52.	54.	53.	57.
% Dist.	.55	0.9	1.6	1.2	1.1	1.5	1.2	.3	.3	.25	.3	.3	.2	.25
Esig. (1)	.23	.24	.19	.2	25	.19	.25	.79	.89	.63	.77	.91	.71	.86
Eout	8.	8.9	7.75	8.93	11.8	8.7	12.2	33.3	38.5	30.8	39.6	49.	37.5	48.6
Gain	34.8	37.1	40.8	44.6	47.2	45.8	48.8	42.2	43.3	48.9	51.4	53.9	52.8	56.6
% Dist.	3.6	3.4	3.95	3.4	4.15	3.9	4.6	3.67	4.28	3.4	4.3	4.75	4.8	4.95

Note (1) For self bias operation this is taken at the grid current point with less than ½ Microampere grid current.

FOR CIRCUIT SEE FIGURE 4

Zero Bias Operation

	Ebb = 100 VOLTS							Ebb = 250 VOLTS						
Rb	0.1		0.27			0.47		0.1		0.27			0.47	
Rcf	0.27	0.47	0.27	0.47	1.0	0.47	1.0	0.27	0.47	0.27	0.47	1.0	0.47	1.0
Rk	....	....	....	....	....	....	....	....	....	....	....	....	....	....
Ib	0.325	0.325	0.17	0.17	0.17	0.1125	0.1125	1.35	1.35	0.65	0.65	0.65	0.385	0.385
Ec	....	....	....	....	....	....	....	....	....	....	....	....	....	....
Eb	67.5	67.5	54.1	54.1	54.1	47.1	47.1	115	115	74.5	74.5	74.5	69	69
Esig.	0.1	0.1	0.1	0.1	0.1	0.1	0.1	0.1	0.1	0.1	0.1	0.1	0.1	0.1
Eout	3.7	3.8	4.35	4.6	4.83	4.6	5.2	4.5	4.75	5.2	5.8	5.8	5.7	6.2
Gain	37.0	38.0	43.5	46.0	48.3	46.0	52.0	45.0	47.5	52.0	58.0	58.0	57.0	62.0
% Dist.	0.806	0.72	1.58	1.17	0.88	1.56	0.985	0.583	0.61	0.53	0.65	0.65	0.5	0.64
Esig. (1)	0.26	0.28	0.21	0.24	0.28	0.21	0.26	0.9	0.96	0.76	0.87	0.97	0.74	0.88
Eout	8.8	9.8	8.25	10.5	12.5	9.2	12.5	37.0	41.7	36.5	44.2	53.0	39.3	50.0
Gain	33.8	35.0	39.3	43.7	44.6	43.8	48.1	41.2	43.4	48.0	50.8	54.6	53.1	56.8
% Dist.	4.71	4.9	4.96	4.79	4.96	4.8	4.78	4.8	4.88	4.86	4.96	4.88	4.89	4.89

Note (1) Maximum signal for 5.0% Distortion.

FOR CIRCUIT SEE FIGURE 5

RESISTANCE COUPLED AMPLIFIER DATA

Sylvania Type 6SJ7GT, 12SJ7GT

Self Bias Operation

	Ebb = 100 VOLTS							Ebb = 250 VOLTS						
Rb	0.1		0.27			0.47		0.1		0.27			0.47	
Rc1	0.39		1.2			1.8		0.39		1.2			2.2	
Rcf	0.27	0.47	0.27	0.47	1.0	0.47	1.0	0.27	0.47	0.27	0.47	1.0	0.47	1.0
Rk	1200	1200	2700	2700	2700	4700	4700	560	560	1200	1200	1200	1800	1800
Ib	0.645	0.645	0.259	0.259	0.259	0.165	0.165	1.77	1.77	0.675	0.675	0.675	0.402	0.402
Ic1	0.18	0.18	0.068	0.068	0.068	0.045	0.045	0.50	0.50	0.183	0.183	0.183	0.102	0.102
Ec1	0.99	-0.99	0.882	-0.882	-0.882	-0.99	-0.99	-1.27	-1.27	-1.03	-1.03	-1.03	-0.908	-0.908
Ec2	29.8	29.8	18.5	18.5	18.5	19.0	19.0	55	55	30.5	30.5	30.5	25.5	25.5
Eb	35.5	35.5	30.2	30.2	30.2	22.5	22.5	73	73	67.8	67.8	67.8	61.2	61.2
Esig	0.1	0.1	0.1	0.1	0.1	0.1	0.1	0.1	0.1	0.1	0.1	0.1	0.1	0.1
Eout	6.85	7.8	8.2	10.2	12.5	10.2	13.1	10.2	11.5	13.6	17.9	21.6	19.5	25.6
Gain	68.5	78.0	82	102	125	102	131	102	115	136	179	216	195	256
% Distortion	0.6	0.7	3.4	2.6	2.3	2.8	3.2	0.7	0.8	2.2	1.8	1.5	3.1	2.4
Esig(1)	0.2	0.2	0.14	0.14	0.14	0.13	0.13	0.5	0.5	0.25	0.25	0.25	0.15	0.15
Eout	13.15	14.9	11.1	13.9	17.2	12.8	16.6	47	54	33	41.8	50	28	37
Gain	65.8	74.5	79.4	99.5	123	98.5	128	94	108	132	167.5	200	187	247
% Distortion	3.0	2.9	5.1	4.3	3.7	4.6	5.0	4.2	5.0	5.2	4.4	4.7	4.5	3.7

Note (1) At grid current point, less than ½ microampere grid current.

FOR CIRCUIT SEE FIGURE 1

Sylvania Type 7A4, 7N7, 6F8GT, 6J5GT, 6SN7GT, 12SX7GT

Self Bias Operation

Type 7A4 or Single Section of Type 7N7

	Ebb = 100 VOLTS						Ebb = 250 VOLTS					
Rb	0.047		0.10		0.27		0.047		0.10		0.27	
Rcf	0.1	0.27	0.1	0.47	0.27	0.47	0.1	0.27	0.1	0.47	0.27	0.47
Rk	1800	2200	3300	4700	8200	10,000	1500	2200	2700	3900	6800	8200
Ib	1.05	0.97	0.57	0.50	0.24	0.22	2.79	2.4	1.49	1.31	0.61	0.58
Ec	-1.89	-2.13	-1.90	-2.35	-1.93	-2.19	-4.18	-5.28	-4.03	-5.11	-4.15	-4.74
Eb	50.6	54.4	43.0	50.0	36.5	40.9	119	137	101	119	85	94
Esig	0.5	0.5	0.5	0.5	0.5	0.5	1.0	1.0	1.0	1.0	1.0	1.0
Eout	6.6	7.1	6.8	7.4	7.3	7.4	14.8	15.0	15.2	16.2	15.9	16.2
Gain	13.2	14.2	13.6	14.8	14.6	14.8	14.8	15.0	15.2	16.2	15.9	16.2
% Distortion	1.9	1.8	2.4	2.0	2.0	1.7	1.4	1.4	1.8	1.3	1.6	1.3
Esig (1)	0.95	1.15	0.95	1.3	0.95	1.20	2.70	3.50	2.55	3.30	2.64	3.05
Eout	12.5	15.5	12.9	19.2	13.7	17.7	39.9	52.5	38.4	53.0	42.0	49.4
Gain	13.1	13.9	13.6	14.7	14.4	14.7	14.7	15.0	15.0	16.1	15.9	16.2
% Distortion	3.9	4.2	4.9	4.7	4.4	4.5	4.1	4.9	4.9	4.6	4.7	4.5

Note (1) For self bias operation this is taken at the grid current point with less than ½ microampere grid current.

FOR CIRCUIT SEE FIGURE 4

RESISTANCE COUPLED AMPLIFIER DATA

Sylvania Type 7B4, 6AD5GT, 6AV6, 6SF5GT, 6F5GT

Zero Bias Operation

	Ebb = 100 VOLTS							Ebb = 250 VOLTS						
Rb	0.1		0.27			0.47		0.1		0.27			0.47	
Rcf	0.27	0.47	0.27	0.47	1.0	0.47	1.0	0.27	0.47	0.27	0.47	1.0	0.47	1.0
Rk	...	...	...	...	...	...	...	...	...	...	...	...	...	...
Ib	0.223	0.223	0.126	0.126	0.126	0.89	0.89	1.1	1.1	0.54	0.54	0.54	0.34	0.34
Ec	...	...	...	...	...	...	...	...	...	...	...	...	...	...
Eb	77.7	77.7	66.0	66.0	66.0	58.2	58.2	140	140	104	104	104	90	90
Esig	0.1	0.1	0.1	0.1	0.1	0.1	0.1	0.1	0.1	0.1	0.1	0.1	0.1	0.1
Eout	3.85	4.15	4.32	4.9	5.45	5.0	5.8	6.0	6.3	7.0	7.5	8.2	7.7	8.5
Gain	38.5	41.5	43.2	49.0	54.5	50.0	58.0	60.0	63.0	70.0	75.0	82.0	77.0	85.0
% Dist.	4.6	4.3	5.0	4.2	3.3	4.5	3.4	0.8	0.8	1.1	1.0	0.9	1.3	1.1
Esig (1)	0.1	0.11	0.1	0.11	0.14	0.1	0.14	0.46	0.46	0.35	0.40	0.48	0.36	0.45
Eout	3.85	4.55	4.32	5.35	7.4	5.0	7.84	25.3	26.0	22.5	28.0	35.3	25.1	34.2
Gain	38.5	41.4	43.2	48.6	53.0	50.0	56.0	55.0	56.5	64.4	70.0	74.0	70.0	76.0
% Dist.	4.6	4.9	5.0	4.7	5.0	4.5	5.0	4.8	4.7	4.9	4.8	4.8	5.0	4.8

Note (1) Maximum signal for 5% Distortion.

FOR CIRCUIT SEE FIGURE 5

Self Bias Operation

	Ebb = 100 VOLTS							Ebb = 250 VOLTS						
Rb	0.1		0.27			0.47		0.1		0.27			0.47	
Rcf	0.27	0.47	0.27	0.47	1.0	0.47	1.0	0.27	0.47	0.27	0.47	1.0	0.47	1.0
Rk	3900	3900	5600	5600	6800	8200	10,000	1500	800	2700	2700	2700	3900	4700
Ib	0.22	0.22	0.144	0.144	0.13	0.10	0.091	0.84	0.76	0.443	0.443	0.443	0.295	0.271
Ec	-0.86	-0.86	-0.81	-0.81	-0.88	-0.82	-0.91	-1.26	-1.37	-1.19	-1.19	-1.19	-1.15	-1.27
Eb	78	78	61.1	61.1	64.9	53	57.2	166	174	131	131	131	111.5	123
Esig	0.1	0.1	0.1	0.1	0.1	0.1	0.1	0.1	0.1	0.1	0.1	0.1	0.1	0.1
Eout	4.25	4.3	4.8	5.35	5.62	5.4	6.4	5.65	5.8	6.5	7.15	7.65	7.3	7.65
Gain	42.5	43.0	48.0	53.5	56.2	54.0	64.0	56.5	58.0	65.0	71.5	76.5	73.0	76.5
% Dist.	4.1	4.1	4.3	3.7	3.2	4.1	3.6	0.9	0.9	1.0	1.0	1.0	1.3	1.2
Esig (1)	0.12	0.12	0.1	0.1	0.13	0.1	0.15	0.47	0.54	0.39	0.39	0.39	0.33	0.45
Eout	5.1	5.15	4.8	5.35	7.25	5.4	9.0	26.5	30.5	24.5	27.5	29.2	23.5	34.0
Gain	42.5	43.0	48	53.5	55.8	54.0	60.0	56.4	56.5	63.0	70.5	75.0	71.3	75.5
% Dist.	5.1	5.0	4.3	3.7	4.6	4.1	5.0	4.5	5.3	5.1	4.2	3.9	5.2	5.3

Note (1) For self bias operation this is taken at the grid current point with less than ½ microamperre grid current.

FOR CIRCUIT SEE FIGURE 4

RESISTANCE COUPLED AMPLIFIER DATA

Sylvania Type 7B6, 2A6, 6B6G, 6S8GT, 6SQ7GT, 75

Zero Bias Operation

	Ebb = 100 VOLTS							Ebb = 250 VOLTS						
Rb	0.1		0.27			0.47		0.1		0.27			0.47	
Rcf	0.27	0.47	0.27	0.47	1.0	0.47	1.0	0.27	0.47	0.27	0.47	1.0	0.47	1.0
Rk	...	...	...	...	...	...	...	...	...	...	...	...	...	...
Ib	0.228	0.228	0.132	0.132	0.132	0.09	0.09	1.0	1.0	0.52	0.52	0.52	0.34	0.34
Ec	...	...	...	...	...	...	...	...	...	...	...	...	...	...
Eb	77.2	77.2	64.4	64.4	64.4	57.7	57.7	150	150	110	110	110	90	90
Esig	0.1	0.1	0.1	0.1	0.1	0.1	0.1	0.1	0.1	0.1	0.1	0.1	0.1	0.1
Eout	3.3	3.55	3.95	4.48	5.05	4.63	5.4	4.63	5.0	5.6	6.1	6.7	6.43	7.15
Gain	33.0	35.5	39.5	44.8	50.5	46.3	54.0	46.3	50.0	56.0	61.0	67.0	64.3	71.5
% Dist.	3.0	2.9	3.8	3.2	2.6	3.6	2.6	0.8	0.7	0.9	0.8	0.7	0.8	0.7
Esig (1)	0.15	0.16	0.12	0.14	0.17	0.13	0.17	0.55	0.6	0.5	0.57	0.65	0.5	0.6
Eout	4.73	5.4	4.65	6.12	8.3	5.9	8.8	23.4	26.6	25.5	31.8	39.0	29.5	39.5
Gain	31.5	33.8	38.7	43.8	49.0	45.4	51.7	42.5	44.5	51.0	56.0	60.0	59.0	66.0
% Dist.	4.9	5.0	4.9	4.8	5.0	5.0	5.0	4.7	4.9	5.0	4.9	4.9	5.0	5.0

Note (1) Maximum Signal for 5.0% Distortion

FOR CIRCUIT SEE FIGURE 5

Self Bias Operation

	Ebb = 100 VOLTS							Ebb = 250 VOLTS						
Rb	0.1		0.27			0.47		0.1		0.27			0.47	
Rcf	0.27	0.47	0.27	0.47	1.0	0.47	1.0	0.27	0.47	0.27	0.47	1.0	0.47	1.0
Rk	3900	3900	5600	6800	6800	8200	10,000	1800	1800	2700	3300	3900	3900	4700
Ib	0.214	0.214	0.138	0.126	0.126	0.095	0.086	0.725	0.725	0.43	0.395	0.365	0.288	0.261
Ec	-0.835	-0.835	-0.774	-0.857	-0.857	-0.78	-0.86	-1.31	-1.31	-1.16	-1.30	-1.42	-1.12	-1.25
Eb	78.6	78.6	62.8	66.0	66.0	55.3	59.6	177.5	177.5	134	143.5	151.5	114.5	124.5
Esig	0.1	0.1	0.1	0.1	0.1	0.1	0.1	0.1	0.1	0.1	0.1	0.1	0.1	0.1
Eout	3.3	3.5	4.1	4.5	5.0	4.9	5.2	4.37	4.78	5.50	5.92	6.13	6.24	6.75
Gain	33.0	35.0	41.0	45.0	50.0	49.0	52.0	43.7	47.8	55.0	59.2	61.3	62.4	67.5
% Dist.	2.7	2.6	3.2	3.0	2.5	3.1	2.6	0.8	0.7	0.8	0.8	0.7	0.8	0.7
Esig (1)	0.16	0.16	0.10	0.17	0.17	0.12	0.19	0.55	0.55	0.40	0.53	0.61	0.40	0.53
Eout	5.15	5.5	4.1	7.3	8.2	5.75	9.7	23.9	26.0	21.8	31.2	37.0	25.0	36.0
Gain	32.2	34.4	41.0	43.0	48.1	48.0	51.0	43.5	47.4	54.5	59.0	60.6	62.4	67.5
% Dist.	4.5	4.0	3.2	5.0	4.5	4.0	5.0	4.5	4.0	3.3	4.0	1.5	3.3	3.8

Note (1) For self bias operation this is taken at the grid current point with less than ½ Microampere grid current.

FOR CIRCUIT SEE FIGURE 4

RESISTANCE COUPLED AMPLIFIER DATA

Sylvania Type 7C6

Self Bias Operation

	Ebb = 100 VOLTS							Ebb = 250 VOLTS						
Rb	0.1		0.27			0.47		0.1		0.27			0.47	
Rcf	0.27	0.47	0.27	0.47	1.0	0.47	1.0	0.27	0.47	0.27	0.47	1.0	0.47	1.0
Rk	4700	4700	6800	6800	6800	10,000	10,000	1800	1800	2700	3300	3900	3900	4700
Ib	0.156	0.156	0.104	0.104	0.104	0.073	0.073	0.60	0.60	0.38	0.34	0.32	0.258	0.24
Ec	-0.734	-0.734	-0.707	-0.707	-0.707	-0.73	-0.73	-1.08	-1.08	-1.03	-1.12	-1.25	-1.01	-1.13
Eb	84.4	84.4	71.9	71.9	71.9	65.7	65.7	190	190	147	158	163.5	129	137
Esig	0.1	0.1	0.1	0.1	0.1	0.1	0.1	0.1	0.1	0.1	0.1	0.1	0.1	0.1
Eout	2.64	2.9	3.51	4.13	4.65	4.35	5.15	3.7	4.05	5.1	5.35	5.85	5.9	6.52
Gain	26.4	29.0	35.1	41.3	46.5	43.5	51.5	37.0	40.5	51.0	53.5	58.5	59.0	65.2
% Dist.	3.4	3.3	3.4	3.0	2.6	3.7	1.9	1.0	0.9	1.0	0.9	0.5	0.9	0.7
Esig (1)	0.15	0.15	0.12	0.12	0.12	0.14	0.14	0.55	0.55	0.41	0.53	0.60	0.40	0.50
Eout	3.95	4.3	4.16	4.9	5.35	6.0	7.15	19.8	22.0	19.4	28.0	34.0	22.8	32.3
Gain	26.4	28.6	34.7	40.7	44.5	43.0	51.0	36.0	40.0	47.5	52.9	57.0	57.0	64.6
% Dist.	5.0	4.7	4.3	3.7	3.5	5.0	4.0	5.0	4.5	3.7	4.8	4.6	3.6	3.6

Note (1) For self bias operation this is taken at the grid current point with less than ½ Microampere grid current.

FOR CIRCUIT SEE FIGURE 4

Sylvania Type 7C6

Zero Bias Operation

	Ebb = 100 VOLTS							Ebb = 250 VOLTS						
Rb	0.1		0.27			0.47		1.0		0.27			0.47	
Rcf	0.27	0.47	0.27	0.47	1.0	0.47	1.0	0.27	0.47	0.27	0.47	1.0	0.47	1.0
Rk	...	...	...	...	...	...	...	...	...	...	...	...	...	...
Ib	0.174	0.174	0.108	0.108	0.108	0.078	0.078	0.84	0.84	0.47	0.47	0.47	0.32	0.32
Ec	...	...	...	...	...	...	...	...	...	...	...	...	...	...
Eb	82.6	82.6	70.8	70.8	70.8	63.4	63.4	166	166	123	123	123	100	100
Esig	0.1	0.1	0.1	0.1	0.1	0.1	0.1	0.1	0.1	0.1	0.1	0.1	0.1	0.1
Eout	2.75	3.02	3.67	4.25	4.77	4.68	5.37	3.95	4.32	5.2	5.8	6.25	6.0	6.75
Gain	27.5	30.2	36.7	42.5	47.7	46.8	53.7	39.5	43.2	52.0	58.0	62.5	60.0	67.5
% Dist.	3.3	3.1	4.3	3.5	2.9	3.9	2.9	0.6	0.5	0.7	0.6	0.5	0.6	0.5
Esig (1)	0.14	0.15	0.12	0.14	0.15	0.12	0.15	0.55	0.55	0.5	0.53	0.6	0.48	0.58
Eout	3.7	4.45	4.22	5.5	6.9	5.35	7.7	19.8	21.9	23.6	27.9	34.0	27.4	37.0
Gain	26.4	29.6	35.0	39.2	46.0	44.5	51.4	36.0	39.8	47.2	52.6	56.6	57.0	63.9
% Dist.	4.6	5.0	5.0	4.9	5.0	4.8	5.0	5.0	4.8	5.0	4.8	4.9	5.0	5.0

Note (1) Maximum Signal for 5% Distortion.

FOR CIRCUIT SEE FIGURE 5

RESISTANCE COUPLED AMPLIFIER DATA

Sylvania Type 7C7, 6C6, 6J7GT, 6W7G, 7AJ7, 14C7, 1273, 1280, 954, 57

Self Bias Operation

	Ebb = 100 VOLTS							Ebb = 250 VOLTS						
Rb	0.1		0.27			0.47		0.1		0.27			0.47	
Rc_2	0.47		1.2			1.8		0.47		1.2			2.2	
Rcf	0.27	0.47	0.27	0.47	1.0	0.47	1.0	0.27	0.47	0.27	0 47	1.0	0.47	1.0
Rk	1000	1000	2200	2200	2200	3900	3900	470	470	1000	1000	1000	1500	1500
Ib	0.62	0.62	0.27	0.27	0.27	0.168	0.168	1.76	1.76	0.75	0.75	0.75	0.44	0.44
Ic_2	0.145	0.145	0.064	0.064	0.064	0.465	0.465	0.41	0.41	0.177	0.177	0.177	0.10	0.10
Ec_1	−0.765	−0.765	−0.735	−0.735	−0.735	−0.622	−0.622	−1.02	−1.02	−0.927	−0.927	−0.927	−0.81	−0.81
Ec_2	31.9	31.9	23.3	23.3	23.3	16.3	16.3	57.2	57.2	37.5	37.5	37.5	30	30
Eb	38	38	27.2	27.2	27.2	21	21	74	74	47.5	47.5	47.5	43.5	43.5
Esig	0.1	0.1	0.1	0.1	0.1	0.1	0.1	0.1	0.1	0.1	0.1	0.1	0.1	0.1
Eout	7.0	8.05	8.0	10.0	12.0	9.8	12.5	10.6	12.0	13.0	17.0	20.4	18.8	24.5
Gain	70.0	80.5	80	100	120	98	125	106	120	130	170	204	188	245
% Distortion	2.7	2 4	3.7	2.7	2.3	3.2	1.9	1.6	1.4	1.5	1.6	2.4	2.0	2.8
Esig (1)	0.18	0.18	0.14	0.14	0.14	0.14	0.14	0.4	0.4	0.27	.0.27	-0.27	0.18	0.18
Eout	12.3	13.9	10.8	13.8	16.7	13.2	17.0	40.3	45.2	33.0	41.6	49.5	32	41.5
Gain	68.5	77.2	77.2	98.7	119	94.5	121.5	101	113	122	154	183.5	178	230
% Distortion	4.7	4.1	5.5	4.6	3.8	4.9	5.0	4.3	4.4	.5.0	5.0	5.9	4.3	4.9

Note (1) For self bias operation this is taken at the grid current point with less than ⅛ microampere grid current.

FOR CIRCUIT SEE FIGURE 1

Sylvania Type 7E5

Self Bias Operation

	Ebb = 100 VOLTS						Ebb = 250 VOLTS					
Rb	0.047		0.1		0.27		0.047		0.1		0.27	
Rcf	0.1	0.27	0.1	0.47	0.27	0.47	0.1	0.27	0.1	0.47	0.27	0.47
Rk	1000	1200	1800	2200	4700	4700	560	680	820	1200	2700	2700
Ib	1.06	1.00	0.59	0.56	0.248	0.248	3.05	2.95	1.74	1.60	0.67	0.67
Ec	−1.06	−1.20	−1.06	−1.23	−1.17	−1.17	−1.71	−2.00	−1.43	−1.92	−1.81	−1.81
Eb	50.2	53	41	44	33	33	107	111.5	76	90	69.	69
Esig	0.1	0.1	0.1	0.1	0.1	0.1	0.1	0.1	0.1	0.1	0.1	0.1
Eout	2.15	2.22	2.12	2.34	2.20	2.30	2.56	2.55	2.60	2.69	2.48	2.59
Gain	21.5	22.2	21.2	23.4	22.0	23.0	25.6	25.5	26.0	26.9	24.8	25.9
% Distortion	1.6	1.2	1.6	1.2	1.2	1.2	0.8	0.6	0.8	0.7	0.9	0.9
Esig (1)	0.29	0.39	0.20	0.40	0.39	0.39	0.82	1.00	0.64	0.96	0.78	0.78
Eout	6.25	8.65	4.25	9.30	8.55	8.95	21.0	25.5	16.6	25.8	19.3	20.2
Gain	21.5	22.2	21.2	23.2	21.9	23.0	25.6	25.5	26.0	26.9	24.8	25.9
% Distortion	4.3	4.9	3.0	4.4	4.8	4.0	5.0	5.0	4.7	4.9	5.0	4.8

Note (1) For self bias operation this is taken at the grid current point with less than ⅛ Microampere grid current.

FOR CIRCUIT SEE FIGURE 4

Sylvania Type 7E6, 6BF6, 6R7GT, 6SR7GT, 6ST7, 12BF6, 12SW7, 26C6

RESISTANCE COUPLED AMPLIFIER DATA

Self Bias Operation

	Ebb = 100 VOLTS						Ebb = 250 VOLTS					
Rb	0.047		0.1		0.27		0.047		0.1		0.27	
Rcf	0.1	0.27	0.1	0.47	0.27	0.47	0.1	0.27	0.1	0.47	0.27	0.47
Rk	1800	2200	2700	3900	6800	8200	1500	1800	2200	3300	5600	8200
Ib	1.07	1.0	0.62	0.56	0.256	0.240	2.85	2.69	1.63	1.46	0.661	0.60
Ec	-1.93	-2.2	-1.67	-2.18	-1.74	-1.97	-4.27	-4.84	-3.59	-4.82	-3.70	-4.92
Eb	49.6	53.0	38	44	31	35.2	116	123.8	87	104	71.8	88
Esig	0.5	0.5	0.5	0.5	0.5	0.5	1.0	1.0	1.0	1.0	1.0	1.0
Eout	5.3	5.4	5.6	5.8	5.7	5.8	11.2	11.8	11.8	12.4	12.1	12.2
Gain	10.6	10.8	11.2	11.6	11.4	11.6	11.2	11.8	11.8	12.4	12.1	12.2
% Distortion	2.1	1.9	2.0	1.8	2.2	1.8	1.3	1.2	1.8	1.3	1.8	1.3
Esig (1)	1.02	1.24	0.87	1.23	0.97	1.10	2.80	3.25	2.23	3.27	2.40	3.32
Eout	10.6	13.2	9.5	14.2	11.0	12.8	31.2	38.0	26.0	40.4	28.5	40.6
Gain	10.4	10.6	10.9	11.5	11.3	11.6	11.1	11.7	11.7	12.3	12.1	12.2
% Distortion	4.5	4.9	4.7	4.8	4.9	4.3	4.5	4.6	4.4	4.5	4.5	4.9

Note (1) For self bias operation this is taken at the grid current point with less than ⅛ microampere grid current

FOR CIRCUIT SEE FIGURE 4

RESISTANCE COUPLED AMPLIFIER DATA

Sylvania Type 7F7, 6AQ7GT, 6SL7GT, 6SC7, 6SU7GT, 7K7

Self Bias Operation—All Values Per Single Section

	Ebb = 100 VOLTS							Ebb = 250 VOLTS						
Rb	0.10		0.27			0.47		0.10		0.27			0.47	
Rcf	0.27	0.47	0.27	0.47	1.0	4.7	1.0	0.27	0.47	0.27	0.47	1.0	0.47	1.0
Rk	3300	3300	5600	5600	6800	6800	8200	1800	2200	3300	3900	3900	4700	5600
Ib	0.30	0.30	0.169	0.169	0.152	0.1240	0.112	0.917	0.83	0.475	0.44	0.44	0.312	0.29
Ec	-0.99	-0.99	-0.948	-0.948	-1.03	-0.844	-0.92	-1.65	-1.83	-1.57	-1.72	-1.72	-1.47	-1.62
Eb	70	70	54.3	54.3	59.9	41.7	47.3	158.3	167	122	131	131	103	113.5
Esig	0.1	0.1	0.1	0.1	0.1	0.1	0.1	0.1	0.1	0.1	0.1	0.1	0.1	0.1
Eout	3.2	3.23	3.7	4.15	4.5	4.28	4.65	4.0	4.1	4.5	5.0	5.25	5.25	5.55
Gain	32.0	32.3	37.0	41.5	45.0	42.8	46.5	40.0	41.0	45.0	50.0	52.5	52.5	55.5
% Dist.	1.3	1.3	1.8	1.5	1.4	1.8	1.4	0.6	0.5	0.6	0.5	0.4	0.5	0.4
Esig (1)	0.33	0.33	0.21	0.21	0.34	0.2	0.3	0.87	1.03	0.83	0.97	0.97	0.77	0.90
Eout	10.3	10.4	7.7	8.6	14.8	8.5	13.5	33.6	41.5	36.3	46.6	48.8	38.8	48.5
Gain	31.2	31.5	36.6	41.0	43.5	42.5	45.0	38.6	40.2	43.7	48.0	50.4	50.4	54.0
% Dist.	4.9	4.8	4.0	3.1	5.0	3.4	4.4	4.0	4.8	4.5	4.8	3.8	3.9	3.7

Note (1) For self bias operation this is taken at the grid current point with less than ½ Microampere grid current.

FOR CIRCUIT SEE FIGURE 4

Zero Bias Operation—All Values Per Single Section

	Ebb = 100 VOLTS							Ebb = 250 VOLTS						
Rb	0.1		0.27			0.47		0.1		0.27			0.47	
Rcf	0.27	0.47	0.27	0.47	1.0	0.47	1.0	0.27	0.47	0.27	0.47	1.0	0.47	1.0
Rk	...	...	...	...	...	...	...	...	...	...	...	...	...	...
Ib	0.40	0.40	0.202	0.202	0.202	0.13	0.13	1.36	1.36	0.64	0.64	0.64	0.40	0.40
Ec	...	...	...	...	...	...	...	...	...	...	...	...	...	...
Eb	60.0	60.0	45.5	45.5	45.5	38.6	38.6	114	114	77.0	77.0	77.0	62.0	62.0
Esig	0.1	0.1	0.1	0.1	0.1	0.1	0.1	0.1	0.1	0.1	0.1	0.1	0.1	0.1
Eout	3.4	3.6	3.95	4.35	4.7	5.1	4.95	4.1	4.32	4.7	5.1	5.5	5.25	5.75
Gain	34.0	36.0	39.5	43.5	47.0	51.0	49.5	41.0	43.2	47.0	51.0	56.0	52.5	57.5
% Dist.	1.1	1.0	1.1	1.0	1.0	1.0	0.9	0.4	0.4	0.5	0.4	0.4	0.4	0.4
Esig (1)	0.33	0.34	0.25	0.3	0.34	0.25	0.32	1.0	1.07	.86	.97	1.09	.83	1.03
Eout	10.3	11.2	9.25	11.8	14.7	10.4	14.7	37.0	41.5	37.3	45.4	53.6	40.0	53.0
Gain	31.2	33.0	37.0	39.4	43.4	41.6	46.0	37.0	38.8	43.4	46.8	49.3	48.3	51.5
% Dist.	5.0	4.8	4.9	5.0	5.0	5.0	5.0	4.9	5.0	5.0	5.0	4.8	5.0	5.0

Note (1) Maximum signal for 5.0% Distortion.

FOR CIRCUIT SEE FIGURE 5

RESISTANCE COUPLED AMPLIFIER DATA

Sylvania Type 7F8

Self Bias Operation

	Ebb = 100 VOLTS						Ebb = 250 VOLTS					
Rb	0.047		0.1		0.27		0.047		0.1		0.27	
Rcf	0.1	0.27	0.1	0.47	0.27	0.47	0.1	0.27	0.1	0.47	0.27	0.47
Rk	1000	1200	1800	2200	4700	4700	390	470	820	1000	2200	2200
Ib	0.90	0.84	0.51	0.48	0.22	0.22	3.0	2.86	1.58	1.50	0.66	0.66
Ec	-0.90	-1.01	-0.92	-1 05	-1.03	-1.03	-1.17	-1.34	-1.29	-1.50	-1.45	-1.45
Eb	57.7	60.5	49	52	40.5	40.5	109	115	92	100	72	72
Esig	0.1	0.1	0.1	0.1	0.1	0.1	0.1	0.1	0.1	0.1	0.1	0.1
Eout	2.65	2.65	2.65	3.0	2.85	3.0	3.38	3.82	3.56	3.65	3.40	3.60
Gain	26.5	26.5	26.5	30 0	28.5	30.0	33.8	38.2	35.6	36.5	34.0	36.0
% Distortion	2.1	1.8	2.3	1 6	1.7	1.5	1.1	0.9	1.0	0.7	0.8	0.7
Esig (1)	0.18	0.26	0.17	0.30	0.24	0.24	0.4	0.55	0.50	0.70	0.60	0.60
Eout	4.74	6.8	4.45	8.8	6.7	7.1	13.5	21.0	17.8	25.5	20.4	21.6
Gain	26.3	26.2	26.2	29.4	28.0	29.6	33.8	38.2	35.6	36.4	34.0	36.0
% Distortion	3.7	4.8	3.6	4.7	4.3	3.7	4.0	4.6	4.6	4.9	4.5	4.2

Note (1). For self bias operation this is taken at the grid current point with less than ½ microampere grid current.

FOR CIRCUIT SEE FIGURE 4

Sylvania Type 7R7, 14R7

Self Bias Operation

	Ebb = 100 VOLTS							Ebb = 250 VOLTS						
Rb	0.1		0 27			0.47		0.1		0.27			0.47	
Rc_2	0.39		1.0			1.8		0.39		1.0			1.8	
Rcf	0.27	0.47	0.27	0.47	1.0	0.47	1.0	0.27	0.47	0.27	0.47	1.0	0.47	1.0
Rk	1200	1200	2700	2700	2700	4700	4700	470	470	1000	1000	1200	1800	1800
Ib	0.61	0.61	0.271	0.271	0.271	0.163	0.163	1.75	1.75	0.75	0.75	0.74	0.44	0.44
Ic_2	0.173	0.173	0.076	0.076	0.076	0.044	0.044	0.49	0.49	0.212	0.212	0.207	0.121	0.121
Ec_1	-0.94	-0.94	-0.938	-0.938	-0.938	-0.974	-0.974	-1.05	-1.05	-0.962	-0.962	-1.14	-1.01	-1.01
Ec_2	32.5	32.5	23.5	23.5	23.5	20.5	20.5	59	59	38	38	43	32.1	32.1
Eb	39	39	26.9	26.9	26.9	23.4	23.4	75	75	47.5	47.5	50	43	43
Esig	0.1	0.1	0.1	0.1	0.1	0.1	0.1	0.1	0.1	0.1	0.1	0.1	0.1	0.1
Eout	7.8	8.9	8.0	10.2	12.2	9.6	12.5	13.6	15.5	15.4	19.8	22.0	19.5	25.5
Gain	78	89	80	102	122	96	125	136	155	154	198	220	195	255
% Distortion	4.6	4.3	5.0	3.8	3.0	5.2	3.9	2.2	2.1	2.8	2.1	2.0	3.0	3.1
Esig (1)	0.11	0.11	0.1	0.1	0.1	0.1	0.1	0.22	0.22	0.15	0.15	0.2	0.14	0.14
Eout	8.35	9.8	8.0	10.2	12.2	9.6	12.5	29	33	22.5	28.0	41.5	26.4	34.5
Gain	77.8	89	80	102	122	96	129	132	150	150	187	207.5	189	246.5
% Distortion	5.1	4.6	5.0	3.8	3.0	5.2	3.9	4.8	4.3	4.5	3.8	5.0	4.7	4.4

Note (1). For self bias operation this is taken at the grid current point with less than ½ microampere grid current.

FOR CIRCUIT SEE FIGURE 1

DECIBEL TABLE

Voltage Ratio (Equal Impedance)	Power Ratio	← − db + →	Voltage Ratio (Equal Impedance)	Power Ratio
1.000	1.000	0	1.000	1.000
0.989	0.977	0.1	1.012	1.023
0.977	0.955	0.2	1.023	1.047
0.966	0.933	0.3	1.035	1.072
0.955	0.912	0.4	1.047	1.096
0.944	0.891	0.5	1.059	1.122
0.933	0.871	0.6	1.072	1.148
0.923	0.851	0.7	1.084	1.175
0.912	0.832	0.8	1.096	1.202
0.902	0.813	0.9	1.109	1.230
0.891	0.794	1.0	1.122	1.259
0.841	0.708	1.5	1.189	1.413
0.794	0.631	2.0	1.259	1.585
0.750	0.562	2.5	1.334	1.778
0.708	0.501	3.0	1.413	1.995
0.668	0.447	3.5	1.496	2.239
0.631	0.398	4.0	1.585	2.512
0.596	0.355	4.5	1.679	2.818
0.562	0.316	5.0	1.778	3.162
0.531	0.282	5.5	1.884	3.548
0.501	0.251	6.0	1.995	3.981
0.473	0.224	6.5	2.113	4.467
0.447	0.200	7.0	2.239	5.012
0.422	0.178	7.5	2.371	5.623
0.398	0.159	8.0	2.512	6.310
0.376	0.141	8.5	2.661	7.079
0.355	0.126	9.0	2.818	7.943
0.335	0.112	9.5	2.985	8.913
0.316	0.100	10	3.162	10.00
0.282	0.0794	11	3.55	12.6
0.251	0.0631	12	3.98	15.9
0.224	0.0501	13	4.47	20.0
0.200	0.0398	14	5.01	25.1
0.178	0.0316	15	5.62	31.6
0.159	0.0251	16	6.31	39.8
0.141	0.0200	17	7.08	50.1
0.126	0.0159	18	7.94	63.1
0.112	0.0126	19	8.91	79.4
0.100	0.0100	20	10.00	100.0
3.16×10^{-2}	10^{-3}	30	3.16×10	10^{3}
10^{-2}	10^{-4}	40	10^{2}	10^{4}
3.16×10^{-3}	10^{-5}	50	3.16×10^{2}	10^{5}
10^{-3}	10^{-6}	60	10^{3}	10^{6}
3.16×10^{-4}	10^{-7}	70	3.16×10^{3}	10^{7}
10^{-4}	10^{-8}	80	10^{4}	10^{8}
3.16×10^{-5}	10^{-9}	90	3.16×10^{4}	10^{9}
10^{-5}	10^{-10}	100	10^{5}	10^{10}
3.16×10^{-6}	10^{-11}	110	3.16×10^{5}	10^{11}
10^{-6}	10^{-12}	120	10^{6}	10^{12}

LOGARITHMS OF NUMBERS

	0	1	2	3	4	5	6	7	8	9
10	0000	0043	0086	0128	0170	0212	0253	0294	0334	0374
11	0414	0453	0492	0531	0569	0607	0645	0682	0719	0755
12	0792	0828	0864	0899	0934	0969	1004	1038	1072	1106
13	1139	1173	1206	1239	1271	1303	1335	1367	1399	1430
14	1461	1492	1523	1553	1584	1614	1644	1673	1703	1732
15	1761	1790	1818	1847	1875	1903	1931	1959	1987	2014
16	2041	2068	2095	2122	2148	2175	2201	2227	2253	2279
17	2304	2330	2355	2380	2405	2430	2455	2480	2504	2529
18	2553	2577	2601	2625	2648	2672	2695	2718	2742	2765
19	2788	2810	2833	2856	2878	2900	2923	2945	2967	2989
20	3010	3032	3054	3075	3096	3118	3139	3160	3181	3201
21	3222	3243	3263	3284	3304	3324	3345	3365	3385	3404
22	3424	3444	3464	3483	3502	3522	3541	3560	3579	3598
23	3617	3636	3655	3674	3692	3711	3729	3747	3766	3784
24	3802	3820	3838	3856	3874	3892	3909	3927	3945	3962
25	3979	3997	4014	4031	4048	4065	4082	4099	4116	4133
26	4150	4166	4183	4200	4216	4232	4249	4265	4281	4298
27	4314	4330	4346	4362	4378	4393	4409	4425	4440	4456
28	4472	4487	4502	4518	4533	4548	4564	4579	4594	4609
29	4624	4639	4654	4669	4683	4698	4713	4728	4742	4757
30	4771	4786	4800	4814	4829	4843	4857	4871	4886	4900
31	4914	4928	4942	4955	4969	4983	4997	5011	5024	5038
32	5051	5065	5079	5092	5105	5119	5132	5145	5159	5172
33	5185	5198	5211	5224	5237	5250	5263	5276	5289	5302
34	5315	5328	5340	5353	5366	5378	5391	5403	5416	5428
35	5441	5453	5465	5478	5490	5502	5514	5527	5539	5551
36	5563	5575	5587	5599	5611	5623	5635	5647	5658	5670
37	5682	5694	5705	5717	5729	5740	5752	5763	5775	5786
38	5798	5809	5821	5832	5843	5855	5866	5877	5888	5899
39	5911	5922	5933	5944	5955	5966	5977	5988	5999	6010
40	6021	6031	6042	6053	6064	6075	6085	6096	6107	6117
41	6128	6138	6149	6160	6170	6180	6191	6201	6212	6222
42	6232	6243	6253	6263	6274	6284	6294	6304	6314	6325
43	6335	6345	6355	6365	6375	6385	6395	6405	6415	6425
44	6435	6444	6454	6464	6474	6484	6493	6503	6513	6522
45	6532	6542	6551	6561	6571	6580	6590	6599	6609	6618
46	6628	6637	6646	6656	6665	6675	6684	6693	6702	6712
47	6721	6730	6739	6749	6758	6767	6776	6785	6794	6803
48	6812	6821	6830	6839	6848	6857	6866	6875	6884	6893
49	6902	6911	6920	6928	6937	6946	6955	6964	6972	6981
50	6990	6998	7007	7016	7024	7033	7042	7050	7059	7067
51	7076	7084	7093	7101	7110	7118	7126	7135	7143	7152
52	7160	7168	7177	7185	7193	7202	7210	7218	7226	7235
53	7243	7251	7259	7267	7275	7284	7292	7300	7308	7316
54	7324	7332	7340	7348	7356	7364	7372	7380	7388	7396

LOGARITHMS OF NUMBERS—Continued

	0	1	2	3	4	5	6	7	8	9
55	7404	7412	7419	7427	7435	7443	7451	7459	7466	7474
56	7482	7490	7497	7505	7513	7520	7528	7536	7543	7551
57	7559	7566	7574	7582	7589	7597	7504	7612	7619	7627
58	7634	7642	7649	7657	7664	7672	7679	7686	7694	7701
59	7709	7716	7723	7731	7738	7745	7752	7760	7767	7774
60	7782	7789	7796	7803	7810	7818	7825	7832	7839	7846
61	7853	7860	7868	7875	7882	7889	7896	7903	7910	7917
62	7924	7931	7938	7945	7952	7959	7966	7973	7980	7987
63	7993	8000	8007	8014	8021	8028	8035	8041	8048	8055
64	8062	8069	8075	8082	8089	8096	8102	8109	8116	8122
65	8129	8136	8142	8149	8156	8162	8169	8176	8182	8189
66	8195	8202	8209	8215	8222	8228	8235	8241	8248	8254
67	8261	8267	8274	8280	8287	8293	8299	8306	8312	8319
68	8325	8331	8338	8344	8351	8357	8363	8370	8376	8383
69	8388	8395	8401	8407	8414	8420	8426	8432	8439	8445
70	8451	8457	8463	8470	8476	8482	8488	8494	8500	8506
71	8513	8519	8525	8531	8537	8543	8549	8555	8561	8567
72	8573	8579	8585	8591	8597	8603	8609	8615	8621	8627
73	8633	8639	8645	8651	8657	8663	8669	8675	8681	8686
74	8692	8698	8704	8710	8716	8722	8727	8733	8739	8745
75	8751	8756	8762	8768	8774	8779	8785	8791	8797	8802
76	8808	8814	8820	8825	8831	8837	8842	8848	8854	8859
77	8865	8871	8876	8882	8887	8893	8899	8904	8910	8915
78	8921	8927	8932	8938	8943	8949	8954	8960	8965	8971
79	8976	8982	8987	8993	8998	9004	9009	9015	9020	9025
80	9031	9036	9042	9047	9053	9058	9063	9069	9074	9079
81	9085	9090	9096	9101	9106	9112	9117	9122	9128	9133
82	9138	9143	9149	9154	9159	9165	9170	9175	9180	9186
83	9191	9196	9201	9206	9212	9217	9222	9227	9232	9238
84	9243	9248	9253	9258	9263	9269	9274	9279	9284	9289
85	9294	9299	9304	9309	9315	9320	9325	9330	9335	9340
86	9345	9350	9355	9360	9365	9370	9375	9380	9385	9390
87	9395	9400	9405	9410	9415	9420	9425	9430	9435	9440
88	9445	9450	9455	9460	9465	9469	9474	9479	9484	9489
89	9494	9499	9504	9509	9513	9518	9523	9528	9533	9538
90	9542	9547	9552	9557	9562	9566	9571	9576	9581	9586
91	9590	9595	9600	9605	9609	9614	9619	9624	9628	9633
92	9638	9643	9647	9652	9657	9661	9666	9671	9675	9680
93	9685	9689	9694	9699	9703	9708	9713	9717	9722	9727
94	9731	9736	9741	9745	9750	9754	9759	9763	9768	9773
95	9777	9782	9786	9791	9795	9800	9805	9809	9814	9818
96	9823	9827	9832	9836	9841	9845	9850	9854	9859	9863
97	9868	9872	9877	9881	9886	9890	9894	9899	9903	9908
98	9912	9917	9921	9926	9930	9934	9939	9943	9948	9952
99	9956	9961	9965	9969	9974	9978	9983	9987	9991	9996

COMMONLY USED T AND H PADS

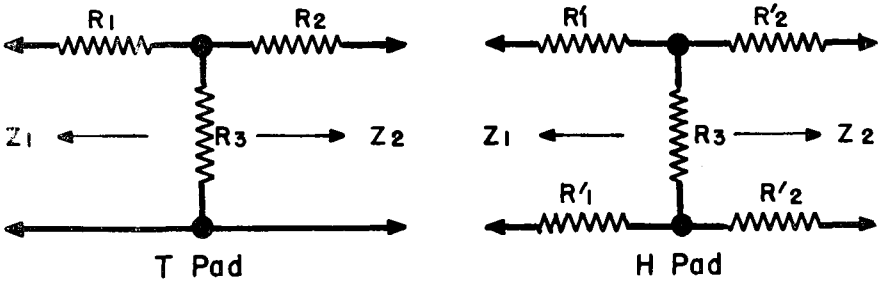

Z_1 ← → Z_2 Ohms	Loss	R_1 Ohms	R_2 Ohms	R_3 Ohms
50 to 50	5 db	14	14	83
50 to 50	10 db	26	26	35
50 to 50	15 db	35	35	18
50 to 50	20 db	41	41	10
50 to 200	Min Loss 11.5 db	0	175	57
50 to 200	15 db	16	175	37
50 to 200	20 db	31	185	20
50 to 500	Min Loss 15.8 db	0	475	53
50 to 500	20 db	20	480	31
50 to 2000	Min Loss 22 db	0	1980	50
200 to 200	5 db	35	55	334
200 to 200	10 db	103	103	140
200 to 200	15 db	140	140	75
200 to 200	20 db	163	163	40
200 to 500	Min Loss 9 db	0	380	270
200 to 500	10 db	23	390	222
200 to 500	15 db	98	417	116
200 to 500	20 db	140	436	64
200 to 2000	Min Loss 15.8 db	0	1886	214
200 to 2000	20 db	76	1912	128
500 to 500	5 db	138	138	834
500 to 500	10 db	258	258	352
500 to 500	15 db	350	350	183
500 to 500	20 db	410	410	100
600 to 600	5 db	168	168	988
600 to 600	10 db	312	312	422
600 to 600	15 db	419	419	221
600 to 600	20 db	491	491	121
500 to 2000	Min Loss 11.5 db	0	1755	575
500 to 2000	15 db	168	1775	366
500 to 2000	20 db	307	1837	203
500 to 5000	Min Loss 15.8 db	0	4750	528
500 to 5000	20 db	190	4780	321
2000 to 2000	5 db	570	570	3330
2000 to 2000	10 db	1040	1040	1410
2000 to 2000	15 db	1400	1400	735
2000 to 2000	20 db	1634	1634	406
2000 to 5000	Min Loss 9 db	0	3910	2590
2000 to 5000	15 db	980	4170	1160
2000 to 5000	20 db	1400	4460	640
5000 to 5000	5 db	1370	1370	8330
5000 to 5000	10 db	2600	2600	3520
5000 to 5000	15 db	3500	3500	1830
5000 to 5000	20 db	4085	4085	1015

Values given are for T pads. For balanced H pads resistances R_1 and R_2 equal one-half values of R_1 and R_2.

CONSTANT K TYPE HIGH-PASS FILTER DESIGN

The constants of a "T" or "pi" type constant K high-pass filter may be determined rapidly with acceptable accuracy with the aid of this chart.

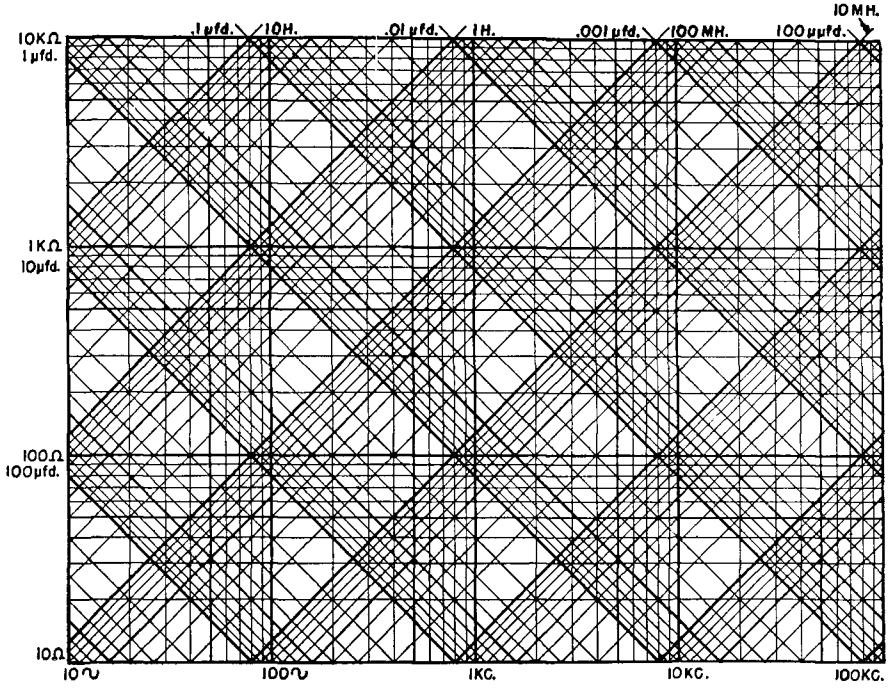

In designing an electrical filter, it is customary to determine the constants of the elements to a fairly high degree of accuracy. However, the damping characteristic of the constant K type filter is not sharp, so that calculations to an accuracy of better than a few per-cent are seldom required, and effective use can be made of charts to determine inductance and capacitance.

The diagram shows both the "T" and "pi" types of constant K high-pass filter. In this figure:

$$L = R/4\pi f_0$$
$$C = 1/4\pi f_0 R$$

where f_0 is the cut-off frequency and R is the image impedance.

From the chart it is possible to determine L and C if f_0 and R are known. For example, the chart shows that a filter with a cut-off frequency of 10,000 cycles and an image impedance of 600 ohms would call for $L = 4.8$ mh. and $C = 0.014$ μfd.

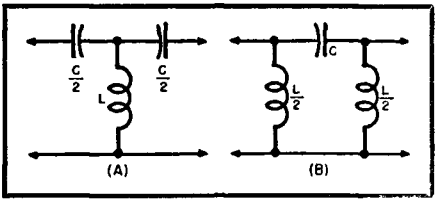

(A) "T" type and (B) "pi" type constant K high-pass filter.

CONSTANT K TYPE LOW-PASS FILTER DESIGN

The constants of a "T" or "pi" type constant K low-pass filter may be determined rapidly with acceptable accuracy with the aid of this chart.

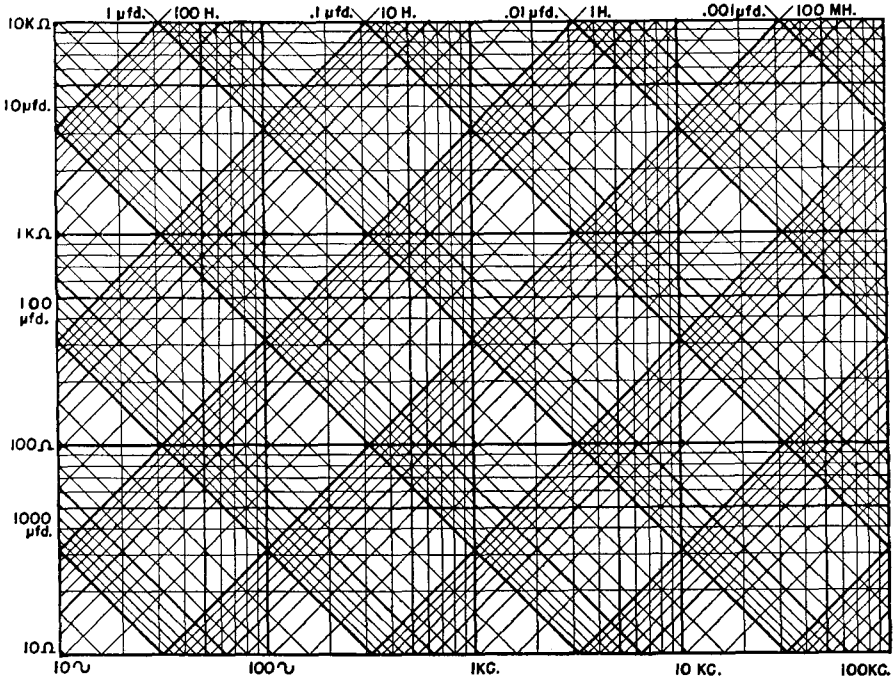

Two types of the constant K type low-pass filter are shown. The equations for determining the constants of either type of filter are as follows:

$$L = R/\pi f_0$$
$$C = 1/\pi R f_0$$

where f_0 is the cutoff frequency in cps and R is the image impedance in ohms.

The chart may be used to determine the constants to an acceptable degree of accuracy. If the desired cutoff frequency is above 100 kc, the chart may still be used. The desired value of f_0 is divided by some multiple of ten to give a value which can be read on the chart. The values of L and C determined from the chart are then divided by the same multiple of 10 to give the correct values of L and C. For example, if the f_0 is 500 kc., the constants are determined from the chart for a value of 50 kc and then the values of L and C are divided by 10.

If any two of the four variables L, C, f_0 and R are known, the chart may be used to determine the other two.

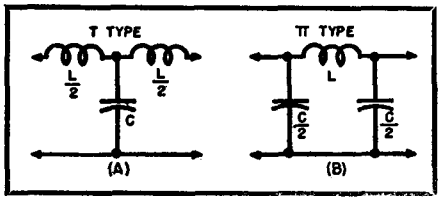

(A) "T" type and (B) "pi" type constant K low-pass filter to be used with chart.

REDUCTION IN GAIN CAUSED BY FEEDBACK

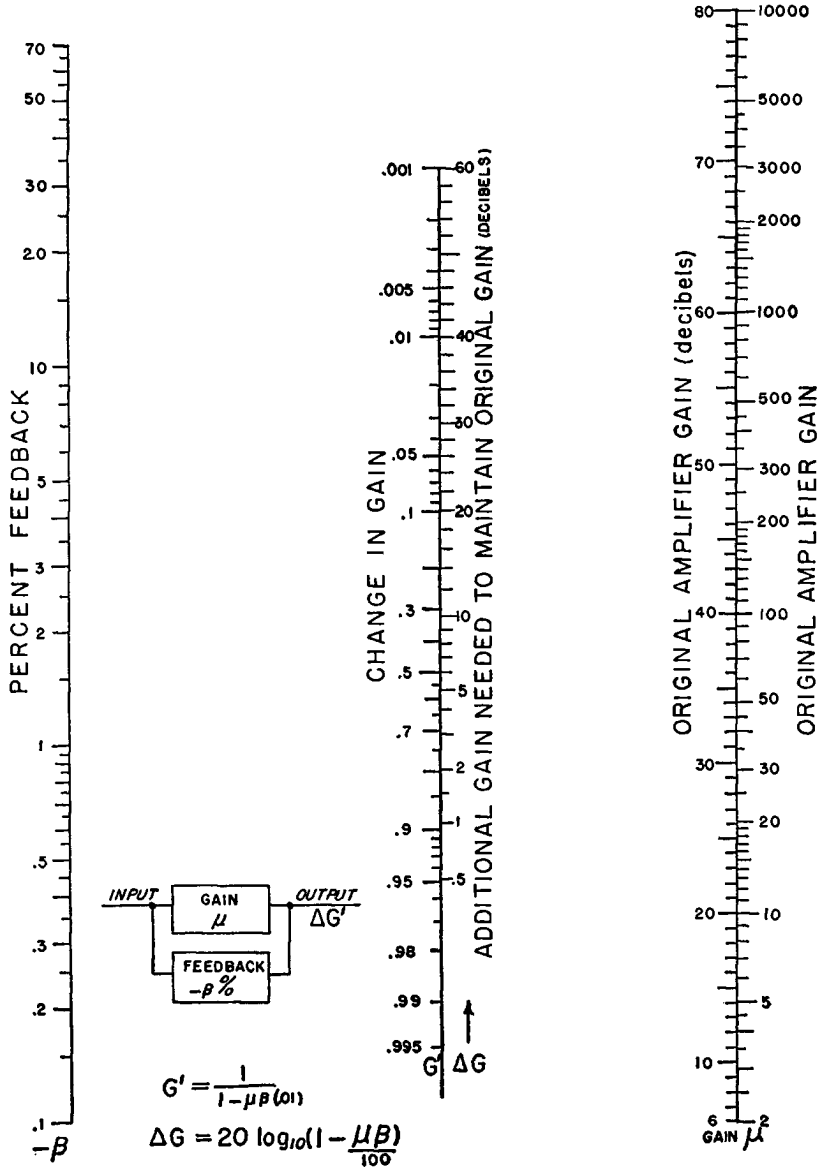

In negative feedback amplifier considerations β (expressed as a percentage) has a negative value. A line across β and μ scales will intersect center scale to indicate change in gain resulting. It also indicates amount (in decibels) by which input must be increased to maintain original output. Original amplifications may be expressed as voltage ratio in decibels by using appropriate scale at right. (Courtesy Federal T&T Co.)

Index

N

U

V

W